AMENDED

PINAL COUNTY
WIDE OPEN OPPORTUNITY

AMENDED

NOTICE OF PUBLIC MEETING AND EXECUTIVE SESSION
PINAL COUNTY BOARD OF SUPERVISORS
AGENDA FOR REGULAR SESSION
Wednesday, March 6, 2024

9:30 AM - CALL TO ORDER

PINAL COUNTY ADMINISTRATIVE COMPLEX
BOARD OF SUPERVISORS HEARING ROOM
135 N. PINAL STREET
FLORENCE, AZ 85132

PLEDGE OF ALLEGIANCE - INVOCATION
BUSINESS BEFORE THE BOARD
(Consideration/Approval/Disapproval of the following:)

(1) Call to the Public - Consideration and discussion of comments from the public. Those wishing to address the Pinal County Board of Supervisors need not request permission in advance. Action taken as a result of public comment will be limited to directing staff to study the matter or rescheduling the matter for further consideration and decision at a later date.
Click Here for Call to the Public Guidelines

(2) County Manager's Report (Information Only). (Leo Lew)

(3) Supervisor District update(s) regarding notable current or upcoming events concerning the district (Information Only). (Mike Goodman)

(4) **Announcement:** Open Space & Trails Advisory Commission appointments, term of service April 2024 through April 2028.
- Supervisor Kevin Cavanaugh's appointment of Robin Davis
- Supervisor Jeffrey McClure's reappointment of Josh Bowman (Natasha Kennedy)

(5) Discussion/approval/disapproval of a Proclamation identifying April as "Fair Housing Month" to be read into the record by Marshell Williams. (Rolanda Cephas/Cathryn Whalen)

(6) Discussion and update(s) regarding the 2024 state and federal legislative session, including bills, budget proposals, committee hearings, and pending or proposed upcoming legislation requests from Board of Supervisor members, state or federal legislators, or their staff in attendance. (Stephen Miller)

(7) Purchasing Division Report - March 6, 2024. (Angeline Woods)

(8) **CONSENT ITEMS:**

All items indicated by an asterisk (*) will be handled by a single vote as part of the consent agenda, unless a Board Member, County Manager, or member of the public objects at the time the agenda item is called.

* A. Discussion/approval/disapproval of Minutes from February 7, 2024, Regular Meeting

of the Board of Supervisors. (Natasha Kennedy)

* B. Discussion/approval/disapproval of the current billings before the Board. (Natasha Kennedy)

* C. Discussion/approval/disapproval of the recommendation to the Arizona Department of Liquor License and Control of application, series 007 Beer and Wine Bar, of Jared Michael Repinski for Ghett Yo Wings located at 40975 N. Ironwood Drive #B104, San Tan Valley, AZ 85140, and authorize the Clerk of the Board to execute and submit all necessary documents to the State. Supervisor District #2. (Natasha Kennedy)

* D. Discussion/approval/disapproval of the Fireworks Display Permit application of Jelly Roll at Country Thunder on behalf of Pyrotecnico for supervised fireworks display to be held on Saturday, April 13, 2024, at 20585 E. Water Way, Florence, Arizona 85132. Supervisor District #5. (Natasha Kennedy)

* E. Discussion/approval/disapproval of Pinal County requesting to become a party to the Good Neighbor Agreement between the Town of Superior and Resolution Copper, and authorizing a District #5 Representative to participate in the Community Working Group meetings. (Leo Lew/Chris Keller)

* F. Discussion/approval/disapproval of authorization to close the bank account for NSP3, which Pinal County Housing Authority no longer manages, and for authorization for the Clerk of the Board to sign a letter to inform the bank of said action. Banking institution is Wells Fargo. (Rolanda Cephas/Cathryn Whalen)

* G. Discussion/approval/disapproval of a Subrecipient Agreement between the Town of Florence and Pinal County, through the Pinal County Board of Supervisors beginning March 6, 2024, ending March 30, 2025, for $197,063. The Town of Florence has executed a Cooperative Agreement with Pinal County for the federal fiscal years of 2022-2024. As such, Pinal County will provide Community Development Block Grant funds to execute eligible activities in accordance with the Pinal County FFY2019-2023 Consolidated Plan. The Town of Florence will complete ADA-compliant improvements at the Senior Center and Heritage Park as approved by the Board of Supervisors in the FFY23 Annual Action Plan. (Heather Patel/Angeline Woods)

* H. Discussion/approval/disapproval to accept an Award issued per ALERT PY21/FY22-5A "One-Time Funding Opportunity" between the Arizona Department of Economic Security and Pinal County, through the Pinal County Board of Supervisors, beginning February 12, 2024, and ending May 31, 2024, in the amount of $516,802. This grant will be used by the ARIZONA@WORK Pinal County Adult and Dislocated Worker programs to serve 50 Adult Probationers from February 2024, through May 2024, to address the unique barriers faced by individuals re-entering the workforce after a felony conviction. Acceptance requires an amendment to the FY23/24 budget to transfer reserve appropriation from Fund 213 (Grants/Project Contingency) to Fund 298 (ED-Workforce Innovation-WIOA) to increase revenues and expenditures. (Joel Millman/James Smith)

* I. Discussion/approval/disapproval of the appointment of Mike Cruz of Lucid Motors (Business Sector) to the Pinal County Workforce Development Board. The term of service will be March 7, 2024, to March 6, 2026. (Joel Millman/James Smith)

* J. Discussion/approval/disapproval to retroactively submit a grant application to the Arizona Department of Homeland Security, State Homeland Security Grant Program for $71,773. If awarded, Pinal County will execute a Memorandum of Understanding with the State of Arizona to administer the project on behalf of Pinal County communities. The project includes licensing of cybersecurity software. (Chris Combs/Robert Stanley)

* K. Discussion/approval/disapproval to submit a grant application to the Arizona Department of Emergency Management's Emergency Management Performance

Grant for $440,814.40. Match is required in the amount of $440,814.40. This grant will be used by the Office of Emergency Management Branch of Development Services for the operations budget. (AD23-013) (Courtney Prock/Kore Redden/Joe Ortiz)

* L. Discussion/approval/disapproval of Resolution No. 030624-RD23-124 releasing Maintenance Bond No. US00105132SU21A, associated with San Tan Highlands, located in Section 13, Township 3 South, Range 7 East. Supervisor District #2. (RD23-124) (Christopher Wanamaker/Joe Ortiz)

* M. Discussion/approval/disapproval of Grant of Electric System Easement by Pinal County, a political subdivision of the State of Arizona (Owner) to Electrical District Number Two. Supervisor District #3. (GA23-027) (Celeste Garza/Joe Ortiz)

* N. Discussion/approval/disapproval of Resolution No. 030624-RD23-125 initiating the disposition of a portion of public easement within Plat of the Townsite of Randolph. Supervisor District #3. (RD23-125) (Celeste Garza/Joe Ortiz)

* O. Discussion/approval/disapproval of the Agreement between the City of Coolidge and the Pinal County Attorney's Office for use of the City of Coolidge's Gun Firing Range. (Kent Volkmer)

* P. Discussion/approval/disapproval of an application for payment of $4,998 to Cutters Document Destruction, LLC from the Pinal County Attorney's Office anti-racketeering fund account to assist with the expense of providing onsite document shredding opportunities for the residents of Pinal County. (Kent Volkmer)

* Q. Discussion/approval/disapproval of the following appointments and resignations for the precinct committeemen of the Democratic and Republican parties:
Republican Appointments:
Supervisor District #5:
Precinct #59 Elizabeth M. Fitzgerald 2206 E. 37th Ave., Apache Junction 85119
Republican Resignations:
Supervisor District #3:
Precinct #13 Michael B. Miller 5703 N. Dakota Dr., Eloy 85131
Supervisor District #4:
Precinct #109 James Bencina Jr., 7701 W. Willow Way, Florence 85132
Democratic Resignations:
Supervisor District #4:
Precinct #26 Julia Anderson 630 W. Sundance Cir., San Tan Valley 85143 (Dana Lewis)

Item Added

* R. Discussion/approval/disapproval of Resolution No. 030624-RD23-126 of the Board of Supervisors authorizing the County Engineer to sign an application with the Arizona State Land Department for the acquisition of right of way associated with Judd Road and Bella Vista Road. Supervisor District #5. (RD23-126) (Christopher Wanamaker/Joe Ortiz)

(9) Meeting of the Pinal County Library District Board of Directors. (Shawn Flecken/Cathryn Whalen)

(10) Meeting of the Pinal County Public Health Services District Board of Directors. (Merissa Mendoza/MaryEllen Sheppard)

(11) **Public Hearing** and discussion/approval/disapproval of case CSR-009-23: Clark Larson, Owner, and Amanda Lauridsen – Precise Sign Co. LLC, applicant/agent, requesting approval of a Comprehensive Sign Package to allow the installation of two (2) monument signs and eight (8) wall signs with a maximum area of 76.66 square feet per sign, on a 1.22± acre parcel in the CB-1 Local Business Zone; tax parcel 104-22-013N (legal on file); situated in a portion of Section 31, Township 2 South, Range 8 East, of the Gila & Salt River Base & Meridian, Pinal County, Arizona, located on the northeast corner of N Gary Rd and W Empire Rd in San Tan Valley. Supervisor District #2.

(Patrick Roberts/Brent Billingsley)

(12) **Public Hearing** and discussion/approval/disapproval of Resolution No. 2024-SUP-029-23, a Resolution approving case SUP-029-23, Goldfield Ghost Town & Mine Tours INC, owner, Scott Hopper, applicant/agent, requesting approval of a Special Use Permit to continue to operate a wireless communication facility, on a 5.0± acre parcel in the CB-2 General Business Zone; tax parcel 100-02-0370 (legal on file); situated in a portion of Section 1, Township 1 North, Range 8 East, Pinal County, Arizona, located northwest of E Apache Trail and E Mammoth Mine Rd in an unincorporated area of Pinal County. The Planning Commission recommended approval (8 to 0) of case SUP-029-23 with fifteen (15) stipulations. Supervisor District #5. (Glenn Bak/Brent Billingsley)

(13) Discussion/approval/disapproval of the funding for the recommended 3% Pinal County Health Benefits increase in FY 2024 - 2025 to promote a consistent county contribution among all plans within legal and system limits. (Angeline Woods/MaryEllen Sheppard)

(14) Discussion of Board Members' request for future agenda item(s) and/or reports to be presented at upcoming meetings. (Mike Goodman)

(15) Executive Session pursuant to A.R.S. 38-431.03(A)(3)(4) for counsel to provide legal advice and to obtain direction regarding pending or contemplated litigation relating to a tax deed issued on properties. (Kevin Costello/Kent Volkmer)

Item Added (16) Executive Session pursuant to A.R.S. 38-431.03(A)(3)(4) for legal advice and litigation update concerning TX 2017-000663. (Chris Keller/Kent Volkmer)

ADJOURNMENT

(SUPPORTING DOCUMENTS ARE AVAILABLE AT THE CLERK OF THE BOARD OF SUPERVISORS' OFFICE AND AT https://pinal.novusagenda.com/AgendaPublic/)

NOTE: One or more members of the Board may participate in this meeting by telephonic conference call.

The Board may go into Executive Session for the purpose of obtaining legal advice from the County's Attorney(s) on any of the above agenda items pursuant to A.R.S. 38-431.03(A)(3).

In accordance with the requirement of Title II of the Americans with Disabilities Act (ADA), the Pinal County Board of Supervisors and Pinal County Board of Directors do not discriminate against qualified individuals with disabilities admission to public meetings. If you need accommodation for a meeting, please contact the Clerk of the Board Office at (520) 866-6068, at least (3) three business days prior to the meeting (not including weekends or holidays) so that your request may be accommodated.

Pursuant to A.R.S. 38-431.02, NOTICE IS HEREBY GIVEN, that the public will have physical access to the meeting room at 9:15 AM.

Notice of Possible Recess: The Board may take a Recess around 12:30 p.m. and the meeting will reconvene around 1:00 p.m.

Any invocation that may be offered before the official start of the meeting (i.e. Item 1) that is offered by a Chaplain serving the county or any member of a religious organization with a physical presence in the county so as to qualify for an exemption for religious property under A.R.S. 42-11109, is expressing private thoughts as governed by his or her own conscience, to and for the benefit of the Board. The view or beliefs expressed by the invocation speaker have not been previously reviewed or approved by the Board and do not necessarily represent the religious beliefs or views of the Board in part or as a whole. No member of the community is required to attend or participate in the invocation and such decision will have no impact on their right to participate actively in the business of the Board.

Meeting Notice of Posting

PINAL COUNTY

WIDE OPEN OPPORTUNITY

AGENDA ITEM

March 6, 2024 ADMINISTRATION BUILDING A
FLORENCE, ARIZONA

REQUESTED BY:

Funds #:

Dept. #:

Dept. Name:

Director:

BRIEF DESCRIPTION OF AGENDA ITEM AND REQUESTED BOARD ACTION:

Call to the Public - Consideration and discussion of comments from the public. Those wishing to address the Pinal County Board of Supervisors need not request permission in advance. Action taken as a result of public comment will be limited to directing staff to study the matter or rescheduling the matter for further consideration and decision at a later date.

Click Here for Call to the Public Guidelines

BRIEF DESCRIPTION OF THE FISCAL CONSIDERATIONS AND/OR EXPECTED FISCAL IMPACT OF THIS AGENDA ITEM:

BRIEF DESCRIPTION OF THE EXPECTED PERFORMANCE IMPACT OF THIS AGENDA ITEM:

MOTION:

History

Time	Who	Approval

ATTACHMENTS:

Click to download

- Call to Public Guidelines and House Rules, Code of Conduct

CALL TO THE PUBLIC

There is no statutory requirement for a "call to the public"; it is a privilege, not a right, and given at the discretion of the Board of Supervisors. A "call to the public" is the time period for members of the public to address the Board of Supervisors on any item of concern or to provide public input relating to subject matter within the Board of Supervisors authority or jurisdiction.

Individuals and/or organizations wishing to speak during Call to the Public are encouraged to sign in with the Clerk. During the time set aside for public comment on the agenda, the Chairman will call forth individuals signed up.

Guidelines:

1. Fifteen minutes before the start of the meeting there will be public comment cards for members of the public to sign up if they wish to speak before the Board. After all individuals who signed up for Public Comment have spoken, the Chairman may ask if there are additional individuals who would like to speak.
2. Speakers should adhere to the following protocol:
   a. Sign in with the Clerk before the meeting
   b. At the speakers' podium please state your name and address
   c. Address comments to the Board as a whole
   d. Give written statements and other supporting material to the Clerk. Please note that written statements are made a part of the permanent records of the Board. In addition, if the speaker is unable to complete the presentation in the time allotted, a copy of supporting materials will be provided to the Board.
3. Up to three minutes will be allowed for each presenter to speak. A warning system (card or light) may be used to time presentations.
4. If the individual represents a group, the individual may ask group members to stand while the individual speaks, as opposed to having each member speak on the same issue.
5. In order to maintain civility and respect for all points of view, there will be no clapping, booing or any other verbal form of support or nonsupport. Any person making personal, impertinent, or slanderous remarks or who become boisterous while addressing the Board, shall be asked to refrain from such and if they refuse and continue, may be removed at the discretion of the Chairperson. Continued unauthorized remarks from the audience, stamping of feet, whistling, yelling, booing, clapping, cheering or similar demonstrations may be grounds for removal.
6. Debate or dialogue with the Board is not allowed during Call to the Public. Pursuant to A.R.S. 38-431.01 (H), if it's not an agenda item, the Board response is limited to:
   - Asking staff to study the matter
   - Request placement on a future agenda
   - Respond to criticism

   These three responses must take place at the conclusion of the call to the public.
7. Use of the projection system is reserved for staff. If a member of the public is providing a presentation, please provide 8 copies to the Clerk of the Board (5 copies for the Board and the remaining copies for the County Manager, County Attorney, and Clerk).

HOUSE RULES: CODE OF CONDUCT

1. Listen and understand before judging.
2. Be courteous, honest and respectful of others' opinions, preferences, and persons.
3. Focus on the vision and goals; no personal attacks or inferences.
4. Look for areas of agreement before differences.
5. Be on time; start on time; silence all personal communication devices, and do not allow them to distract from the work at hand.
6. Once a decision is made, support the County decision, but state your reservation.
7. Agree to disagree; move on to the next issue.
8. Come prepared to discuss issues; When possible, ask questions of staff prior to the meeting so that staff can be prepared. Avoid surprises; don't play "Gotcha."
9. Praise in public; provide constructive feedback in private.
10. Participate in discussions and focus on the issue; avoid side conversations. Be mindful that sidebar conversations are disruptive.
11. Communicate in an open, direct manner; keep others informed.
12. If you have a personal issue with another member of Board, go to that member directly and not to other Board members, the community or staff.
13. Be a positive ambassador for the County.
14. In the event of a conflict-of-interest when possible file said conflict with the Clerk of the Board prior to the meeting. The Board member shall make known said conflict and refrain from voting and participating in any discussion on the matter, pursuant to A.R.S. 38-503.

PINAL COUNTY
WIDE OPEN OPPORTUNITY

AGENDA ITEM

March 6, 2024 ADMINISTRATION BUILDING A
FLORENCE, ARIZONA

REQUESTED BY:

Funds #:

Dept. #:

Dept. Name: County Manager

Director: Leo Lew

BRIEF DESCRIPTION OF AGENDA ITEM AND REQUESTED BOARD ACTION:

County Manager's Report (Information Only). (Leo Lew)

BRIEF DESCRIPTION OF THE FISCAL CONSIDERATIONS AND/OR EXPECTED FISCAL IMPACT OF THIS AGENDA ITEM:

BRIEF DESCRIPTION OF THE EXPECTED PERFORMANCE IMPACT OF THIS AGENDA ITEM:

MOTION:

History

Time	Who	Approval

ATTACHMENTS:

Click to download
03.06.2024 County Manager's Report

GARRIAGE MANOR
E Broadway Rd
GOLDEN HILLS
FOUNTAIN OF THE SUN
S Sossaman Rd
S Hawes Rd
Fry's
GOLDEN CREST TERRACE
RANCH
E Broadway Rd
Pueblo Manor
Top rated
PARKWOOD RANCH
Ironwood D
Mesa / Apache Junction KOA Journey
E Broadway Ave
Barleens Dinner Show
S Goldfield Rd
W Southern Ave
W Southern Ave
E Southern Ave
ardt Toyota
The Home Depot
Apache Creek Golf Club
Mesa Market Place Swap Meet
SUPERSTITION SPRINGS
S Ellsworth Rd
Bashas'
E Baseline Rd
W Baseline Ave
E Baseline Ave
Rancho M
Top rated
SUNLAND SPRINGS VILLAGE
SUNLAND VILLAGE EAST
S Hawes Rd
Ironwood Dr
Republic Services Apache Junction Landfill
LAS PALMAS GRAND
MULBERRY
SMCFD
E Guadalupe Rd
SANTA RITA RANCH
SUNLAND SPRINGS VILLAGE
ARIZONA SKYLINE COMMUNITY
MOUNTAIN HEIGHTS
Dignity Health - Arizona General Hospital Mesa...
E Elliot Rd
Ironwood Dr
MOUNTAIN RANCH
Safeway
S Mountain Rd
Blossom Rock by Lennar Homes
EASTMARK
Eastmark Great Park
E Ray Rd
E Ray Rd
W Ray Ave
RANCHO APACHE
Arizona State University Polytechnic Campus
Phoenix-Mesa Gateway Airport
SUPERSTITION VIEW RANCHETTES
S Ellsworth Rd
Bell Bank Park
Mesa Wash Ranch
Republic Services
Climbing and Fitness

PINAL COUNTY

Denise Smith

Jeanne Brandner

PINAL COUNTY

WIDE OPEN OPPORTUNITY

AGENDA ITEM

March 6, 2024 ADMINISTRATION BUILDING A
FLORENCE, ARIZONA

REQUESTED BY:

Funds #:

Dept. #:

Dept. Name:

Director:

BRIEF DESCRIPTION OF AGENDA ITEM AND REQUESTED BOARD ACTION:

Supervisor District update(s) regarding notable current or upcoming events concerning the district (Information Only). (Mike Goodman)

BRIEF DESCRIPTION OF THE FISCAL CONSIDERATIONS AND/OR EXPECTED FISCAL IMPACT OF THIS AGENDA ITEM:

BRIEF DESCRIPTION OF THE EXPECTED PERFORMANCE IMPACT OF THIS AGENDA ITEM:

MOTION:

History

Time	Who	Approval

ATTACHMENTS:

Click to download
No Attachments Available

PINAL COUNTY
WIDE OPEN OPPORTUNITY

AGENDA ITEM

March 6, 2024 ADMINISTRATION BUILDING A
FLORENCE, ARIZONA

REQUESTED BY:

Funds #:

Dept. #:

Dept. Name: Clerk of the Board

Director: Natasha Kennedy

BRIEF DESCRIPTION OF AGENDA ITEM AND REQUESTED BOARD ACTION:

Announcement: Open Space & Trails Advisory Commission appointments, term of service April 2024 through April 2028.

- Supervisor Kevin Cavanaugh's appointment of Robin Davis
- Supervisor Jeffrey McClure's reappointment of Josh Bowman (Natasha Kennedy)

BRIEF DESCRIPTION OF THE FISCAL CONSIDERATIONS AND/OR EXPECTED FISCAL IMPACT OF THIS AGENDA ITEM:

BRIEF DESCRIPTION OF THE EXPECTED PERFORMANCE IMPACT OF THIS AGENDA ITEM:

MOTION:

History

Time	Who	Approval
2/26/2024 12:26 PM	Clerk of the Board	Yes

ATTACHMENTS:

Click to download
Certificate of Appointment
Certificate of Appointment

PINAL COUNTY BOARD OF SUPERVISORS

CERTIFICATE OF APPOINTMENT

TO

ROBIN DAVIS

Is hereby Appointed to the
Open Space & Trails Advisory Commission
Term: April, 2024 to April, 2028
District 1

This appointment has been made in accordance with the provision of A.R.S. §11-934D.

Announced this 6th day of March, 2024 by the Pinal County Board of Supervisors.
Said appointment by Supervisor Kevin Cavanaugh.

(seal)

_____
Kevin Cavanaugh
District 1, Supervisor

PINAL COUNTY BOARD OF SUPERVISORS

CERTIFICATE OF APPOINTMENT

TO

JOSH BOWMAN

Is hereby Reappointed to the
Open Space & Trails Advisory Commission
Term: April, 2024 to April, 2028
District 4

This appointment has been made in accordance with the provision of A.R.S. §11-934D.

Announced this 6th day of March, 2024 by the Pinal County Board of Supervisors.
Said appointment by Supervisor Jeffrey McClure.

(seal)

_____
Jeffrey McClure
District 4, Supervisor

PINAL COUNTY
WIDE OPEN OPPORTUNITY

AGENDA ITEM

March 6, 2024 ADMINISTRATION BUILDING A
FLORENCE, ARIZONA

REQUESTED BY:

Funds #:

Dept. #:

Dept. Name: Housing

Director: Rolanda Cephas

BRIEF DESCRIPTION OF AGENDA ITEM AND REQUESTED BOARD ACTION:

Discussion/approval/disapproval of a Proclamation identifying April as "Fair Housing Month" to be read into the record by Marshell Williams. (Rolanda Cephas/Cathryn Whalen)

BRIEF DESCRIPTION OF THE FISCAL CONSIDERATIONS AND/OR EXPECTED FISCAL IMPACT OF THIS AGENDA ITEM:

HUD funding requires reading and approving Proclamation. Housing Department Act of 1974 as amended requires Housing Funding certify that they shall affirmatively further fair housing.

BRIEF DESCRIPTION OF THE EXPECTED PERFORMANCE IMPACT OF THIS AGENDA ITEM:

Approval supports compliance with fair housing requirements for HUD Funding.

MOTION:

Approve as presented.

History

Time	Who	Approval
1/24/2024 3:35 PM	County Attorney	Yes
1/25/2024 8:17 AM	Grants/Hearings	Yes
1/26/2024 2:56 PM	Budget Office	Yes
1/31/2024 4:48 PM	County Manager	Yes
2/26/2024 9:56 AM	Clerk of the Board	Yes

ATTACHMENTS:

Click to download

- 2024 Fair Housing Month

BY THE PINAL COUNTY BOARD OF SUPERVISORS
PROCLAMATION
FAIR HOUSING MONTH
APRIL 2024

WHEREAS, The Civil Rights Act of 1968, commonly known as the Federal Fair Housing Act, and the Fair Housing Amendments Act of 1988, prohibit discrimination in the sale, rental, leasing, and financing of housing or land to be used for the construction of housing or in the provision of brokerage services on the basis of race, color, religion, sex, disability, familial status or national origin; and

WHEREAS, The 1968 and 1988 Federal Fair Housing Acts declare that it is a National policy to ensure equal opportunities in housing; and

WHEREAS, The month of April has traditionally been designated as Fair Housing Month in the United States.

NOW, THEREFORE, WE, The Pinal County Board of Supervisors, do hereby proclaim April 2024 as **"Fair Housing Month"** and urge all citizens of the County to comply with and show their support for the letter and spirit of the Fair Housing Acts. Proclaimed this 6th day of March, 2024.

Mike Goodman, Chairman, District 2

Jeffrey McClure, Vice-Chairman, District 4

Kevin Cavanaugh, District 1

ATTEST:

Stephen Q. Miller, District 3

Natasha Kennedy, Clerk of the Board

Jeff Serdy, District 5

PINAL COUNTY

WIDE OPEN OPPORTUNITY

AGENDA ITEM

March 6, 2024 ADMINISTRATION BUILDING A
FLORENCE, ARIZONA

REQUESTED BY:

Funds #:

Dept. #:

Dept. Name:

Director:

BRIEF DESCRIPTION OF AGENDA ITEM AND REQUESTED BOARD ACTION:

Discussion and update(s) regarding the 2024 state and federal legislative session, including bills, budget proposals, committee hearings, and pending or proposed upcoming legislation requests from Board of Supervisor members, state or federal legislators, or their staff in attendance. (Stephen Miller)

BRIEF DESCRIPTION OF THE FISCAL CONSIDERATIONS AND/OR EXPECTED FISCAL IMPACT OF THIS AGENDA ITEM:

BRIEF DESCRIPTION OF THE EXPECTED PERFORMANCE IMPACT OF THIS AGENDA ITEM:

MOTION:

History

Time	Who	Approval

ATTACHMENTS:

Click to download
No Attachments Available

PINAL COUNTY
WIDE OPEN OPPORTUNITY

AGENDA ITEM

March 6, 2024 ADMINISTRATION BUILDING A
FLORENCE, ARIZONA

REQUESTED BY:

Funds #:

Dept. #:

Dept. Name: Office of Budget and Finance

Director: Angeline Woods

BRIEF DESCRIPTION OF AGENDA ITEM AND REQUESTED BOARD ACTION:

Purchasing Division Report - March 6, 2024. (Angeline Woods)

BRIEF DESCRIPTION OF THE FISCAL CONSIDERATIONS AND/OR EXPECTED FISCAL IMPACT OF THIS AGENDA ITEM:

BRIEF DESCRIPTION OF THE EXPECTED PERFORMANCE IMPACT OF THIS AGENDA ITEM:

MOTION:

Approve Purchasing Division Report of March 6, 2024

History

Time	Who	Approval
2/26/2024 2:53 PM	County Attorney	Yes
2/28/2024 12:32 PM	Budget Office	Yes
2/28/2024 12:34 PM	County Manager	Yes
2/28/2024 3:01 PM	Clerk of the Board	Yes

ATTACHMENTS:

Click to download

Purchasing Division Report - March 6, 2024

Leo Lew
County Manager

PINAL COUNTY
WIDE OPEN OPPORTUNITY

Angeline Woods
Office of Budget & Finance Director

PURCHASING DIVISION REPORT

March 6, 2024

CONTRACT AWARD RECOMMENDATIONS:

The Board is requested to approve the following contract awards:

1. RFP 242729 – Landscaping Services - Recommend Epifini Landscaping Inc. be awarded a contract beginning March 6, 2024 through March 5, 2025 with four (4) optional one-year extensions. This contract will be used Countywide.

2. RFP 243628 – Courier Services - Recommend Mercury Delivery Services be awarded a contract beginning March 6, 2024 through March 5, 2025 with four (4) optional one-year extensions. This contract will be used Countywide.

CONTRACT AMENDMENTS:

The Board is requested to approve the following contract amendments:

1. RFP 204126 – Towing Services for PCSO - Recommended approval of Amendment No. 5 to exercise the optional extension period from March 15, 2024 through March 14, 2025 with the following suppliers:

   A Secure Towing LLC
   Absolute Towing and Recovery
   Apache Sands
   Axle Towing & Impound, LLC
   Catalina Towing & Recovery
   CL King Towing
   D & S Towing
   Eddies Towing Inc.
   Elite Towing, LLC
   Hughes Towing
   K & R Towing and Management
   Knight Towing LLC
   Mammoth Towing & Service
   Phoenix Metro Towing
   San Tan Valley Towing
   Secured Rite Towing
   Southwest 24 Hour Towing
   Star Towing
   Stay Up Towing, LLC

   There is one (1) optional extension remaining. This contract is used by the Sheriff's Office.

2. ROQ 205126 – On Call Land Use Planning Service - Recommended approval of Amendment No. 3 to exercise the optional extension period from March 28, 2024 through March 27, 2025 with the following suppliers:

   Michael Baker International, Inc.
   Norris Design
   PLAN*et Communities

There is one (1) optional extension remaining. This contract is used by the Community Development Division of Development Services.

3. ROQ 205226 – On-Call Regional Park, Trail & Open Space Planning - Recommended approval of Amendment No. 3 to exercise the optional extension period from March 28, 2024 through March 27, 2025 with the following suppliers:

Environmental Planning Group, LLC	McGann & Associates, Inc.

There is one (1) optional extension remaining. This contract is used by the Parks and Trails Division of Development Services.

4. ROQ 205326 – On-Call Traffic Engineering Services - Recommended approval of Amendment No. 3 to exercise the optional extension period from March 28, 2024 through March 27, 2025 with the following suppliers:

CivTech Inc.	Lee Engineering, LLC
Greenlight Traffic Engineering, LLC	Y2K Engineering, LLC

There is one (1) optional extension remaining. This contract is used by Development Services.

5. ROQ 205426 – On-Call Trail Planning and Design Services - Recommended approval of Amendment No. 3 to exercise the optional extension period from March 28, 2024 through March 27, 2025 with the following suppliers:

American Conservation Experience	McGann & Associates, Inc

There is one (1) optional extension remaining. This contract is used by the Parks and Trails Division of Development Services.

6. ROQ 205626 – On-Call Zoning and Subdivision Regulations Services - Recommended approval of Amendment No. 3 to exercise the optional extension period from March 28, 2024 through March 27, 2025 with the following suppliers:

Matrix Design Group	Michael Baker International, Inc.

There is one (1) optional extension remaining. This contract is used by the Community Development Division of Development Services.

7. ROQ 205826 – On-Call Archaeological & Environmental Services - Recommended approval of Amendment No. 3 to exercise the optional extension period from March 28, 2024 through March 27, 2025 with the following suppliers:

Commonwealth Heritage Group, Inc.	HILGARTWILSON, LLC
Desert Archaeology	SWCA Environmental Consultants

There is one (1) optional extension remaining. This contract is used by the Public Works Division of Development Services.

Leo Lew
County Manager

PINAL COUNTY
WIDE OPEN OPPORTUNITY

Angeline Woods
Office of Budget & Finance Director

COOPERATIVE PURCHASING AGREEMENT PROCUREMENTS $100,000 - $250,000:

The Board is hereby notified of the following cooperative purchases made:

PO NO.:	251318
SUPPLIER:	Net Transcripts
AMOUNT:	$130,000.00
ITEM(S):	Legal Transcription Services
DEPARTMENT:	Public Defense Services

Leo Lew
County Manager

PINAL COUNTY
WIDE OPEN OPPORTUNITY

Angeline Woods
Director, Office of Budget & Finance

To: Pinal County Board of Supervisors

From: Eric Zander, Procurement Officer

Date: March 6, 2024

Re: Contract Award of RFP #242729 Landscaping Services

Background

Request for Proposal 242729 was published to solicit proposals from qualified suppliers to provide Landscaping Services for Pinal County Departments Countywide.

Selection Process

Three (3) proposals were received and opened on January 9, 2024, at 2:15 p.m., and all three (3) of these proposals were deemed responsive and responsible and were evaluated by a three-person committee. Proposals were scored on Capacity of the Responder, Cost, Method of Approach, References, Conformance to Terms and Conditions, and Statement of Work. A summary of the evaluation scores for each Responder is included in the attached Evaluation and Award Determination.

Responders:

Epifini Landscaping, Inc.
Optimal Possibilities, LLC
Ventana Landscaping, LLC

Recommendation

After review and scoring of the proposals by the evaluation committee, it is recommended that the Board of Supervisors approve the award of contract 242729 Landscaping Services to Epifini Landscaping, Inc. The term of the proposed contract is an initial one (1) year term beginning March 6, 2024 through March 5, 2025 with four (4) one-year optional extensions. The estimated cost to the County for the initial contract term is $150,000.00

The Board is also requested to authorize the Office of Budget and Finance Director to approve and sign any resulting administrative documents.

Any questions regarding the outcome of this solicitation or resultant contract may be directed to Eric Zander, Procurement Officer.

Respectfully submitted,

Eric Zander

Eric Zander, CSCP
Procurement Officer
(520) 866-6644
Eric.Zander@pinal.gov

Attachment: Evaluation and Award Determination

Leo Lew
County Manager

PINAL COUNTY
WIDE OPEN OPPORTUNITY

Angeline Woods
Director, Office of Budget & Finance

March 6, 2024

RFP 242729 Landscaping Services
Evaluation and Award Determination

In accordance with the Pinal County Procurement Code, Epifini Landscaping Inc. has been determined to be the most advantageous to the County based on the evaluation criteria set forth in the solicitation.

Score Tabulation

Supplier	Total / 1,000 pts	A - Conformance / 200 pts	B - Cost / 250 pts	C-1 - Capacity of the Responder / 400 pts	C-2 - Method of Approach / 150 pts
Epifini Landscaping Inc.	932.66 pts	200 pts	238.66 pts	370 pts	124 pts
Ventana Landscaping LLC	875 pts	200 pts	250 pts	295 pts	130 pts
Optimal Possibilities, LLC	697.73 pts	200 pts	137.73 pts	255 pts	105 pts

Any questions regarding the outcome of this solicitation or resultant contract may be directed to the Procurement Officer, Eric Zander.

Eric Zander
Procurement Officer
(520) 866-6644
Eric.Zander @pinal.gov

PINAL COUNTY

REQUEST FOR PROPOSAL

LANDSCAPING SERVICES
242729RFP

Exhibit C: Draft Contract

Table of Contents

1. CONTRACT TERM. 2
2. CONTRACT EXTENSION. 2
3. CONTRACT TYPE. 2
4. PRICING 3
5. INVOICING AND PAYMENTS. 4
6. ARIZONA LAW. 5
7. IMPLIED LAW. 6
8. PUBLIC RECORD. 6
9. CONTRACT ORDER OF PRECEDENCE 6
10. RELATIONSHIP OF THE PARTIES. 6
11. SEVERABILITY 6
12. NO PAROLE EVIDENCE. 6
13. NO WAIVER 6
14. CONTRACT ADMINISTRATION AND OPERATION. 7
15. CONTRACT CHANGES. 11
16. RISKS AND LIABILITIES 12
17. WARRANTIES 16
18. COUNTY'S CONTRACTUAL REMEDIES 17
19. CONTRACT TERMINATION 17
20. CONTRACT CLAIMS 19

PINAL COUNTY

Contract 242729RFP
LANDSCAPING SERVICES

THIS CONTRACT is entered into by and between Pinal County, (County), whose primary address is 31 N. Pinal St., Bldg. A., Florence, AZ 85132 and Epifani Landscaping Inc., whose primary address is 3066 N. Lear Ave Casa Grande, Arizona 85122

1. CONTRACT TERM. The resultant contract term will commence upon contract execution, and will continue for one (1) year unless canceled, terminated, renewed, or permissibly extended. The County has no obligation to extend or renew the contract past the initial term.

2. CONTRACT EXTENSION. The County shall have the sole option to extend the term of this contract up to a maximum of four (4) additional one-year terms.

3. CONTRACT TYPE.

   Firm-Fixed Lump Sum Price. The firm-fixed lump sum price is the amount or amounts shown or scheduled as such in the requested Pricing Document, each of which will be Contractor's complete and total compensation for carrying out the relevant portion of the work that it covers; and will not be subject to any adjustment on the basis of Contractor's cost experienced in performing under the contract.

   Except as expressly stated otherwise in the solicitation, Contractor is deemed to have allowed in each firm-fixed lump sum price correct and sufficient amounts to cover all its obligations under or arising from the contract, at law, or otherwise, and to have allowed the necessary resources to enable it to carry out the relevant portion of the work that it covers within any time for performance specified in the Scope of Work.

3.1 Site Services, Logistics, and Utilities. The Contractor shall provide those items of site services, logistics and utilities that are assigned to them in the Scope of Work. The Contractor shall provide all services, equipment, tools, and logistics necessary for its personnel and otherwise as required to carry out the work, and compensation for all those is deemed to be included in the contractual fee mark-up.

   a. For items indicated to be paid on a "unit rate" basis, Contractor shall submit a worksheet with each application for payment showing the actual amount of payment requested for these items, which shall not exceed the unit rate multiplied by the total quantity (i.e., Contractor is "at risk" for costs it incurs that are in excess of the extended value unless the County has issued a change order for the excess).

   b. For items indicated to be paid on a "cost" basis, Contractor shall request reimbursement for the actual cost of such items at least monthly and shall provide the necessary back-up documentation, including receipts or invoices and timesheets (if applicable).

   c. For items indicated to be paid on a "lump sum" basis, Contractor shall request payment for the completed proportion of such items at least monthly.

3.2 Personnel-Related Expenses. The County will only reimburse for those items of personnel-related expense expressly indicated in the Scope of Work as a reimbursable item, and it is agreed that the costs of all other such expenses applicable to its personnel and otherwise as required to carry out the work are adequately compensated in the contractual fee mark-up.

a. For items to be paid on a "unit rate" basis, Contractor shall submit a worksheet with each application for payment showing the actual amount of payment requested for these items, which amount shall not exceed the unit rate multiplied by the total quantity (i.e., Contractor is "at risk" for costs it incurs that are in excess of the extended value unless the County has issued a change order for the excess.

b. For items to be paid on a "cost" basis, Contractor shall request reimbursement for the actual cost of such items at least monthly and shall provide the necessary back-up documentation, including receipts or invoices (if applicable). All reimbursements shall be strictly subject to County's travel policy, which is available at http://www.pinalcountyaz.gov/Purchasing/Pages/DoingBusiness.aspx.

c. For items to be paid on a "lump sum" basis, Contractor shall request payment for the applicable proportion of such items at least monthly.

4. PRICING

4.1 Most Favored Customer Pricing.
Contractor warrants that, for the term of the contract, the prices, rates, discounts, terms, and benefits set out in the proposal, including any subsequent agreed upon amendment to it, will be equal to or better than the lowest prices, best rates, largest discounts, and most favorable terms and benefits, both separately and in combination, at which Contractor sells equivalent items. If Contractor provides more favorable pricing, rates, discounts, terms and benefits to any customer, it shall immediately apply all such pricing, rates, discounts, terms and benefits to pending County purchase orders and offer such pricing, rates, discounts, terms and benefits for all future purchases made by the County.

4.2 All-Inclusive Pricing.
Pricing is all-inclusive, including any ancillary fees and costs required to accomplish the Scope of Work and all aspects of Contractor's proposal as accepted by the County. Details of service not explicitly stated in the Scope of Work or in Contractor's proposal, but necessarily a part of, are deemed to be understood by Contractor and included herein. All administrative, reporting, or other requirements, all overhead costs and profit and any other costs toward the accomplishment of the requirements in the contract are included in the pricing provided.

4.3 Price Reductions and Sales Promotions.
Price reductions may be submitted to or requested by the County for consideration at any time during the life of the contract. Promotions or reductions to sell existing inventory/stock and to include special manufacturer assistance are allowable.

4.4 Price Increase.

The Procurement Officer may review a fully documented request for a rate increase only after the contract has been in effect for two (2) years. Any requested rate increase(s) shall be based on an unmitigatable cost increase to the Contractor that was clearly unpredictable at the time of the offer and is directly correlated to the cost of the goods or services contractually covered.

Any request for rate increase will only be considered at the time of a contract extension and must be submitted ninety (90) days prior to the adjustment. Any request for rate increase shall be a factor in the extension review process and if approved, be implemented by a formal contract change order. The County will have the right to request and receive additional information, statistics, financial records etc., and to direct the content, form, and format of presentation as it deems necessary to validate the Contractor's request for a rate adjustment. Failure to respond to the County's request within the time frames specified will nullify the Contractor's request. The County will determine whether the requested rate increase or alternate option is in its best interest and adjustments will be subject to availability of monies appropriated, if applicable.

4.5 Delivery.
Unless stated otherwise in the Contract, all prices shall be F.O.B. Destination and shall include all freight delivery and unloading at the destination.

4.6 Change Orders.
In the event the County requires any change(s) to the Scope of Work and the Contractor anticipates that the project's approved price may be exceeded as a result of the change, the Contractor shall submit a revised project cost estimate to the requesting department.

The Contractor shall not exceed an approved project's price without prior written approval by the requesting department. If prior approval is not received, the Contractor may be subject to sanctions. The revised project price proposal shall include the following:

a. Changes and/or adjustments caused by the County's change to the Scope of Work for the project, including any adjustments to timeframes for completion of the project.

b. An all-inclusive project price estimate, supported by a detailed cost breakdown to include all costs required to complete the project, as changed by the County.

5. INVOICING AND PAYMENTS.

5.1 Invoices.
The Contractor shall submit detailed, itemized monthly invoices **OR** invoice(s) before payment(s) can be made. Incomplete invoices will not be processed. All invoices shall reflect the contracted prices or rates for goods or services as described in the Scope of Work. At a minimum, the invoice must provide the following information:

a. Company name, address and contact
b. County bill-to name and contact information
c. Contract Number
d. County purchase order number
e. Invoice number and date

f. Payment terms
g. Itemized service price as outlined in the Pricing Response Form

Problems regarding billing or invoicing shall be directed to the using department as listed on the Purchase Order. All invoices must be submitted to the following e-mail or postal address:

financeinvoices@pinal.gov
Pinal County Finance Department
Attn: Accounts Payable
PO Box 1348
Florence, AZ 85132

5.3 No Invoice Without Authorization. Contractor shall not seek payment for any:

a. Charges or fees not delineated in the contract.
b. Materials or services that have not been authorized on a purchase order.
c. Expediting, overtime, premiums, or upcharges absent the County's express prior approval.
d. Materials or services that are the subject of a contract amendment or change order that has not been fully signed.

5.4 Timeliness of Invoice. By A.R.S. § 11-622, all invoices must be submitted to the County within six (6) months after service or product is received. Failure to submit an invoice within this period of time will result in non-payment.

5.5 Payments. No payment shall be issued prior to receipt of acceptable goods and/or services and a correct invoice. The County shall make every effort to process payment for acceptable goods or services within thirty (30) calendar days after receipt of said items/services and a correct invoice.

5.6 Payments Only to Contractor. Unless compelled otherwise by operation of law or order of a court of competent jurisdiction, the County will only make payment to Contractor under the federal tax identifier indicated on the accepted offer.

5.7 Payments to Subcontractors. Contractor shall make payment of all undisputed amounts due to Subcontractors, as applicable to their services, within thirty (30) days of receipt of funds from the County.

5.8 Availability of Funds. By A.R.S. § 35-154, every County payment obligation under the contract is conditioned on the availability of funds appropriated for payment of that obligation. If funds are not appropriated and available for continuance of the contract, the County may terminate the contract at the end of the period for which funds are available, or, at County's discretion, allow appropriate amendment to the contract. No liability will accrue to County if it exercises the foregoing right or discretion, and County will have no obligation or liability for any future payments or for any damages as a result of having exercised it.

6. ARIZONA LAW. This contract shall be governed by the law of the State of Arizona and suits pertaining to this contract shall be brought only in the Pinal County Superior Court, Florence, Arizona.

7. IMPLIED LAW. Each provision of law and any terms required by law to be in this contract are a part of this contract as if fully stated herein.

8. PUBLIC RECORD. This contract is a public record and must be retained by the County for a minimum of six (6) years. All contracts are open to public inspection after contract award, except for any portions determined to be confidential by the County.

9. CONTRACT ORDER OF PRECEDENCE. All of the documents forming the contract are complementary. If certain work, requirements, obligations, or duties are set out only in one but not in another, Contractor shall carry out the work as though the relevant work, requirements, obligations, or duties had been fully described on all, consistent with the other documents forming the contract and as is reasonably inferable from them as being necessary to produce complete results. In case of any inconsistency, conflict, or ambiguity among the documents forming the contract and their provisions, they are to prevail in the following order, descending from most dominate to most subordinate, provided that, among categories of documents or provisions having the same rank, the document or provision with the latest date prevails. Information being identified in one document but not in another is not to be considered a conflict or inconsistency.

    a. Written Contract Amendments
    b. Contract
    c. Contract Exhibit(s) A (i.e. Contracted Scope of Work)
    d. Contract Exhibit(s) B (i.e. Contract Pricing Documents)
    e. Contract Exhibit(s) C (i.e. Responder's Proposal Documents)
    f. Other Contract Exhibits
    g. Orders, in reverse chronological order

10. RELATIONSHIP OF THE PARTIES. The Contractor under this contract is an independent Contractor and shall act in an independent capacity in performance under the contract. Neither party is or is to be construed as being an employee or agent of the other party, and no action, inaction, event, or circumstance will be grounds for deeming it to be so.

11. SEVERABILITY. Any term or condition deemed or adjusted illegal or invalid is thereby stricken from the contract and shall not affect any other term or condition of the contract.

12. NO PAROLE EVIDENCE. The contract, including any documents incorporated into the contact by reference, is intended by the parties as a final and complete expression of their agreement. There are no prior, contemporaneous, or additional agreements, either oral or in writing, pertaining to the contract.

13. NO WAIVER. Either party's failure to insist on strict performance of any term or condition of the contract is not, or will it be deemed to be, a waiver of that term or condition or a bar to, or diminished right of, enforcement of any term or condition.

PINAL COUNTY

14. CONTRACT ADMINISTRATION AND OPERATION.

14.1 Notices and Correspondence. Notices required by this Contract shall be made to the following addresses:

County	Contractor
Name: Eric Zander	**Name: Epifini Landscaping Inc.**
Address: 31 N Pinal St. Florence, AZ 85132 **PO Box #1348**	**Address: 3066 N. Lear Ave Casa Grande, AZ 85122**
Title: Procurement Officer	**Title: Customer Service**
Email: Purchasing@Pinal.gov	**Email: temo@epifini.com**

An authorized County representative and an authorized Contractor representative may change their respective person to whom notice shall be given by written notice to the other and an amendment to the contract shall not be necessary.

14.2 Books and Records. Per A.R.S. § 41-2548(B), Contractor shall retain and shall contractually require each Subcontractor to retain books and records *relating for any cost and pricing data submitted* in satisfaction of § 41-2543 for the period specified in the statute and those retained books and records are subject to audit by the County during that period. Per A.R.S. § 41-2548(B), Contractor shall retain and shall contractually require each Subcontractor to retain books and records *relating to performance under the contract* for the period specified in the statute and those retained books and records are subject to audit by the County during that period. Accordingly, Contractor or Subcontractor shall either make all such books and records available to the County at all reasonable times or produce the records at a designated County office on the County's demand, the choice of which being at the County's discretion. For the purpose of this paragraph, "reasonable times" are during normal business hours and in such a manner so as to not unreasonably interfere with normal business activities.

14.3 Contractor Licenses. Contractor and Subcontractor(s) shall maintain in current status all federal, state, and local licenses and permits required for the operation of its business in general, for its operations under the contract, and if required by this contract, the work itself.

14.4 Inspection and Testing. Per A.R.S. § 41-2547, the County may at reasonable times inspect the part of Contractor's or Subcontractors' plant(s) or places of business related to performance under the contract. Accordingly, Contractor agrees to permit (for itself) and ensure (for Subcontractors) access for inspection at any reasonable time to its facilities, processes, and services. The County may inspect or test, at its own cost,

any finished goods, work-in-progress, components, or unfinished materials that are be supplied under the contract or that will be incorporated into something to be supplied under the contract. If the inspection or testing shows non-conformance or defects, the Contractor will owe the County reimbursement or payment of all costs it incurred in carrying out or contracting for the inspection and testing, as well as for any re-inspection or re-testing that might be necessary. Neither inspection of facilities nor testing of goods, work, components, or unfinished materials will of itself constitute acceptance by the County of those things.

14.5 Acceptance of Work.

a. Materials. The County has the right to make acceptance of materials subject to a complete inspection on delivery and installation, if installation is Contractor's responsibility. The County may apply as acceptance criteria conformity to the contract, workmanship and quality, whether the constituent materials used are correct, and any other matter for which the contract or applicable laws state a requirement, whether stated directly or by reference to another document, standard, reference specification, etc. Contractor shall remove any rejected materials from the delivery location, or from any immediate locations to which it might have been reasonably necessary to move it, then inspect it, carry it off the delivery premises, and subsequently deliver an equal number or quantity of conforming items. The County will not owe Contractor any payment for rejected materials, and the County may, at its discretion, withhold or make partial payment for any rejected materials that have been returned to Contractor in those instances where the County has agreed to permit repair instead of demanding replacement.

b. Services. The County has the right to make acceptance of services subject to acceptance criteria. The County may apply as acceptance criteria conformity to the contract, accuracy, completeness, or other indicators of quality, or any other matter for which the contract or law states a requirement, whether stated directly or by reference to another document, standard, reference specification, etc. The County will not owe Contractor any payment for un-accepted services; and the County may, at its discretion, withhold or make partial payment for any rejected services if Contractor is still in the process of re-performing or otherwise curing the grounds for the County's rejection.

14.6 Subcontracts. The Contractor shall not enter into any subcontract under this contract for the performance of this contract without the advance written notice to the Procurement Officer. The Contractor shall clearly list any proposed subcontractors and the subcontractor's proposed responsibilities. It is expressly understood that all persons employed by the Contractor, either directly or indirectly, shall be considered employees or agents of the Contractor and not the County. Nothing contained in any contract or joint venture agreement shall create any contractual relationships between any subcontractor and County, nor shall the same create any obligation on the part of the County to pay any subcontractor. The subcontract shall incorporate by reference the terms and conditions of this contract.

14.7 Non-Discrimination. Contractor shall comply with the State of Arizona Executive Order No. 2009-09 and all other applicable federal, state and local laws, rules, and regulations regarding non-discrimination and equal opportunity, including the Americans with Disabilities Act.

14.8 E-Verify Requirements. As required by A.R.S. § 41-4401, Contractor and each subcontractor warrants compliance with A.R.S. § 23-214(A) and all federal immigration laws and any regulations relating to the immigration status of their employees. Contractor and each subcontractor acknowledge that under A.R.S. § 41-4401, the County retains the legal right to inspect the papers of any Contractor or subcontractor employee who works under the contract to ensure that Contractor or subcontractor is in compliance with the foregoing warranty and understands that a breach of the foregoing warranty under shall be deemed a material breach of the contract that is subject to penalties up to and including termination of the contract.

14.9 Estimated Quantities. Unless expressly stated otherwise in the solicitation, the (a) Contractor shall not impose any minimum dollar amount, item count, services volume, or services duration on orders; (b) County makes no commitment of any kind concerning the quantity or monetary value of activity, work or services actually initiated or completed during the term of the contract; (c) Contractor shall only deliver or perform as authorized by orders; and (d) County is not limited as to the number of orders it may issue for the contract.

14.10 Non-Exclusivity. This contract is entered into with the understanding and agreement that it is for the sole convenience of Pinal County. The County reserves the right to obtain like materials or services from another source when necessary without penalty or obligation. The County reserves the right to make additional awards by aggregate, line item, regional area, or any other division of goods and services as determined to be in the best interest of the County.

14.11 Additions and Deletions to Contract. The County reserves the right to add and/or delete goods or services to the Contract. If a service requirement is deleted, payment to the Contractor will be reduced proportionately, to the amount of service reduced in accordance with the bid price. If additional materials are required from a Contract, prices for such additions will be negotiated between the Contractor and the County.

14.12 Applicable Taxes. The Contractor shall be responsible for paying all applicable taxes. Pinal County is subject to all applicable state and local transaction privilege taxes. The County is exempt from certain federal excise tax on manufactured goods. The County will provide the necessary exemption certificates as evidence. Transaction privilege taxes apply to the sale and are the responsibility of the seller to remit. Failure to collect such taxes from the buyer does not relieve the seller from its obligation to remit taxes. Contractor and all subcontractors shall pay all Federal, state and local taxes applicable to its operation and any persons employed by the Contractor. Contractor shall, and require all subcontractors to hold the County harmless from any responsibility for taxes, damages and interest, if applicable, contributions required under Federal, and/or state and local laws and regulations and any other costs including transaction privilege taxes, unemployment compensation insurance, Social Security and Worker's Compensation. In order to receive payment the Contractor shall have a current I.R.S. W9 Form on file with County unless not required by law.

14.13 Eligible Agencies.

This contract shall be for the exclusive use of Pinal County.

14.14 Transitions. During commencement of the contract the Contractor shall attend transition meetings with outgoing suppliers as requested by the County to coordinate efforts, ease the transition, and minimize disruption in the County's operations. The County may elect to have outgoing suppliers complete some or all of their work or orders in progress to help ensure the safest and most efficient transition possible, even if that scope is covered under the contract with the new supplier. Conversely, the County anticipates having a continued need for the same materials and services upon expiration or earlier termination of the contract. Accordingly, Contractor shall work closely with any new (incoming) supplier and the County to ensure a smooth and complete transfer. The County's representative shall coordinate all transition activities and facilitate joint development of a comprehensive transition plan by both the existing Contractor and the incoming supplier. During the outgoing transition, the County may elect to have the outgoing Contractor complete some or all of their work or orders in progress to help ensure the safest and most efficient transition possible.

14.15 Other Contractors. The County may undertake with its own resources or through award of other contracts to the same or other suppliers, additional or related work. In such cases, the Contractor shall cooperate fully with the County's employees and other suppliers and carefully fit, connect, accommodate, adjust, or sequence its work to the related work by others. Where the contract requires handing-off Contractor's work to others, Contractor shall cooperate as the County instructs regarding the necessary transfer of its work product, services, or records to the County or the other suppliers. Contractor shall not commit or permit any act that interferes with the County's or other suppliers' performance of their work, provided that, the County shall enforce the foregoing section equitably among all its suppliers so as not impose an unreasonable burden on any one of them.

14.16 Work on County Premises.

a. Compliance with Rules. Contractor is responsible for ensuring that its personnel comply with County's rules, regulations, policies, documented practices, and documented operating procedures while delivering or installing materials or performing services on County grounds or in its facilities. For clarity of intent, the foregoing means that if Contractor is required to comply with certain security requirements in order to deliver, install, or perform at that particular location, then it shall do so nonetheless and without entitlement to any additional compensation or additional time for performance if those particular requirements are not expressly stated in the contract. Contractor is reminded that violation under Pinal County Security policy 2.10 to possess a firearm, ammunition, or an explosive device in a County building is a material breach of contract and grounds for termination for default.

b. Protection of Facilities and Grounds. Contractor shall deliver or install the materials and perform the services without damaging any County facilities or grounds. Contractor shall repair or replace any damage it does cause promptly and at its own expense, subject to whatever instructions and restrictions the County needs to make to prevent inconvenience or disruption of operations. If Contractor fails to make the necessary repairs or replacements and do so in a timely manner, the County will be entitled to exercise its remedies under paragraph 17.5 "Right to Offset."

14.17 Advertising, Publishing, and Promotion of Contract. The Contractor shall not use, advertise or promote information for commercial benefit concerning this contract without the prior written approval of the Procurement Officer.

14.18 Israel Boycott Prohibited. **Pursuant to A.R.S. § 35-393.01(A) and to the extent allowable by law**, if the Contractor engages in for-profit activity and has ten (10) or more employees, and if this agreement has a value of $100,000 or more, the Contractor certifies it is not currently engaged in, and agrees for the duration of this agreement to not engage in, a boycott of goods or services from Israel. This certification does not apply to a boycott prohibited by 50 U.S.C. § 4842 or a regulation issued pursuant to 50 U.S.C. § 4842.

14.19 Use of Forced Labor of Ethnic Uyghurs Prohibited. Pursuant to A.R.S. § 35-394, the use of forced labor, any goods produced by forced labor or contractors or subcontractors that utilize the forced labor of Ethnic Uyghurs in the People's Republic of China is prohibited. Written certification that the contractor complies with this provision shall be submitted to the County. If written certification has been submitted, and the contractor later determines that it is not in compliance with this provision, it shall notify the County within five (5) business days. If the County does not receive notification that within one hundred and eighty (180) days of finding the violation, the company has remedied the violation of this section, the contract will terminate. If the contract naturally or otherwise terminates before the end of the one hundred and eighty (180) day remedy period, the contract terminates on the contract termination date.

15. CONTRACT CHANGES.

15.1 Contract Amendments. The contract is issued under the authority of the Pinal County Board of Supervisors. Only a contract amendment can modify the contract and then only if it does not change the contract's general scope. Purported changes to the contract by a person not expressly authorized by the Procurement Officer or made unilaterally by Contractor will be void and without effect; Contractor will not be entitled to any claim made under the contract based on any such purported changes.

15.2 Signing of Contract Amendments. Contractor's counter-signature (or "approval") of contract modifications is not required to give effect if the contract amendment only covers either:

a. Extension of the term of the contract within the maximum aggregate term;
b. Revision to Procurement Officer appointment or contact information; or
c. Modifications of a clerical nature that have no effect on terms, conditions, price, scope, or other material aspect of the contract.

In every case other than those listed in a, b, and c above, both parties' signature, either inked or electronic (or "approval") of a contract modification is required to give it effect.

15.3 Assignment and Delegation. Contractor shall not assign in whole its rights or delegate in whole its duties under the contract without the Procurement Officer's prior written consent, which consent the Procurement Officer may withhold at his or her discretion. The Procurement Officer shall not unreasonably withhold approval of assignment or delegation. If Contractor's proposed assignment or delegation stems from a split, sale, acquisition, or other non-merger change in control, then no such consent will be given in any event without the assignee or delegate giving County satisfactory and equivalent evidence or assurance of its financial soundness, competency, capacity, and qualification to perform as that which Contractor possessed when County first awarded it the contract. This contract and all of the terms, conditions and provisions herein, shall extend to and be binding upon the heirs, administrators, executors, successors, and assigns of the parties hereto.

16. RISKS AND LIABILITIES

16.1 Risk of Loss. Contractor bears all risk of loss to materials while in pre-production, production, storage transit, staging, assembly, installation, testing, and commissioning, if and as those duties are within the Scope of the Work, until they have been received and accepted as conforming by the County at the location designated in the purchase order or contract. Mere receipt does not constitute final acceptance. The risk of loss for nonconforming materials shall remain with the Contractor regardless of receipt.

16.2 Contractor Insurance. The Contractor and any tier of Subcontractor shall purchase and maintain insurance, until all of their obligations have been discharged including any warranty periods under this contract, against claims for injury to persons or damage to property which may arise from or in connection with the performance of work hereunder by the Contractor, his agents, representatives, employees, or Subcontractors. Failure to do so may, at the sole discretion of the County, constitute a material breach of the contract.

The insurance requirements herein are minimum requirements for this contract and in no way limit the indemnity covenants contained in this contract. The County in no way warrants that the minimum limits contained herein are sufficient to protect the Contractor from liabilities that might arise out of the performance of work under this contract by the Contractor, its agents, representatives, employees or subcontractors, and the Contractor is free to purchase additional insurance.

a. Minimum Scope and Limits of Insurance. Contractor shall purchase and maintain coverage with coverages and limits of liability not less than those stated below.

(1) Commercial General Liability (CGL). Commercial General Liability (CGL) Insurance (CG 0001) and, if necessary, Commercial Umbrella insurance with a limit of not less than $1,000,000 for each occurrence, $2,000,000 General Aggregate Limit, and $2,000,000 Completed Operations/Products Aggregate. The policy shall include coverage for bodily injury, broad form property damage, personal injury, products and completed operations and blanket contractual coverage, and shall not contain any provision which would serve to limit third party action over claims.

The policy shall be endorsed, as required by this written agreement, to include Pinal County, its boards, agents, representatives, officers, directors, officials, and employees as additional insureds with respect to liability arising out of the activities performed by or on behalf of the Contractor. The

additional insured endorsement shall be at least as broad as the Insurance Services Office, Inc.'s CG 2037 0413 and shall insure the County to the full limits of liability purchased by the Contractor even if those limits of liability are in excess of the minimum limits required by this contract. Insurance purchased and maintained by the Contractor shall not be limited to the liability assumed under the indemnification and defense covenants of this contract.

The policy shall contain a waiver of transfer of rights of recover (subrogation) against the County, its boards, agents, representatives, officers, directors, officials, and employees for any claims arising out of Contractor's work or service.

(2) Automobile Liability. Commercial/Business Automobile Liability insurance with a combined single limit (CSL) for bodily injury and property damage of not less than $1,000,000 each occurrence with respect to any of the Contractor's owned, hired, and non-owned vehicles assigned to or used in performance of the Contractor's work or services under this contract.
The policy shall be endorsed, as required by this written agreement, to include Pinal County, its boards, agents, representatives, officers, directors, officials, and employees as additional insureds with respect to liability arising out of the activities performed by or on behalf of the Contractor, involving automobiles owned, leased, hired and/or non-owned by the Contractor, and shall insure the County to the full limits of liability purchased by the Contractor even if those limits of liability are in excess of the minimum limits required by this contract. Insurance purchased and maintained by the Contractor shall not be limited to the liability assumed under the indemnification and defense covenants of this contract.

The policy shall contain a waiver of transfer of rights of recover (subrogation) against the County, its boards, agents, representatives, officers, directors, officials, and employees for any claims arising out of Contractor's work or service.

(3) Workers' Compensation and Employer's Liability.

Workers' Compensation	Statutory
Employer's Liability	
Each Accident	$1,000,000
Disease – Each Employee	$1,000,000
Disease – Policy Limit	$1,000,000

Policy shall contain a waiver of subrogation against Pinal County and its officers, officials, agents, and employees for losses arising from work or service performed by or on behalf of the Contractor. This requirement shall not apply to each Contractor this is exempt under A.R.S. 23-901, and when such Contractor executes the appropriate waiver form.

b. Additional Insurance Requirements. The policies shall include, or be endorsed to include the following provisions:

(1) The Contractor's policies, as applicable, shall stipulate that the insurance afforded the Contractor shall be primary and that any insurance carried by the County, its agents, officials, or employees shall be excess and not contributory insurance as provided by A.R.S. § 41-621 E.

(2) Insurance provided by the Contractor shall not limit the Contractor's liability assumed under the indemnification provisions of this contract.

c. Notice of Cancellation. Applicable to all insurance policies required within the insurance requirements of this contract, Contractor's insurance shall not be permitted to expire, be suspended, be canceled, or be materially changed for any reason without thirty (30) days prior written notice to the County.

d. Acceptability of Insurers. Contractor shall purchase and maintain the herein stipulated minimum insurance from a company or companies duly licensed by the State of Arizona and possessing a current A.M. Best rating of not less than A-6. In lieu of State of Arizona licensing, the stipulated insurance may be purchased from a company or companies, which are authorized to do business in the State of Arizona, provided that said insurance companies meet the approval of the County. The County in no way warrants that the above-required minimum insurer rating is sufficient to protect the Contractor from potential insurer insolvency.

e. Verification of Coverage. Contractor shall furnish the County with certificates of insurance or formal endorsements as required by the contract at least fourteen (14) calendar days prior to commencing work or services under the contract. Such certificates shall identify this contract number and project description and shall be sent directly to the attention of Pinal County Purchasing Department. In the event any insurance policy(ies) required by this contract are written on a "claims made" basis, coverage shall extend for two years past completion and acceptance of the Contractor's work or services and as evidenced by annual certificates of insurance. If a policy does expire during the life of the contract, a renewal certificate must be sent to the County a minimum of fourteen (14) calendar days prior to the expiration date. The form of any insurance policies, limits, endorsements and forms must be acceptable to the County. The County shall not be obligated, however, to review such policies and/or endorsements or to advise Contractor of any deficiencies in such policies and endorsements, and such receipt shall not relieve Contractor from, or be deemed a waiver of County's right to insist on strict fulfillment of Contractor's obligations under this Contract.

f. Subcontractors. All coverages for all tiers of Subcontractors shall be subject to the minimum insurance requirements identified above. The County reserves the right to require, at any time throughout the life of this contract, proof from the Contractor that its Subcontractors have the required coverage.

g. Approval and Modifications. The County reserves the right to review or make modifications to the insurance limits, required coverages, or endorsements throughout the life of this contract, as deemed necessary. Such action will not require a formal contract amendment but may be made by administrative action.

16.3 Basic Indemnification. To the fullest extent permitted by law, Contractor shall defend, indemnify, and hold harmless County indemnitees from indemnified basic claims that:

a. Are caused or alleged to be caused in whole or in part by the negligent or willful acts or omissions of a Contractor indemnitor;

b. Arise out of or are recovered under workers' compensation laws; and/or

c. Arise out of a Contractor indemnitor's failure to conform to any federal, state, or local law, statute, ordinance, rule, regulation, or court decree. The parties specifically intend that the Contractor indemnitors shall indemnify the relevant County indemnitees from and against indemnified basic claims in all instances except where the indemnified basic claim arises solely from those County indemnitees' own negligent or willful acts or omissions. Wherever the indemnification under this subparagraph applies, Contractor is responsible for primary loss investigation, defense, and judgment costs for an on behalf of the other Contractor indemnitors with respect to County indemnitees, and accordingly Contractor is also responsible for any cooperation, contribution, or subordination between or amongst the Contractor indemnitors. In consideration of the award of the contract by a County indemnitee, Contractor hereby waives all rights of subrogation against County indemnities for losses arising from the work.

d. It is the specific intention of the County and the Contractor that the County shall, in all instances, except for the gross negligent or willful acts of the County, be indemnified, defended and held harmless by the Contractor from and against any all demands, claims, suits, losses, and damages.

16.4 Force Majeure.

a. Relief From Performance. The parties are not liable to each other if an occurrence of force majeure prevents its performance under the contract. If either party is delayed at any time in the progress of its performance under the contract by an occurrence of force majeure, the delayed party shall notify the other no later than the following working day after the occurrence, or as soon as it could reasonably have been expected to recognize that the occurrence had effect in cases where the effects were not readily apparent. In any event, the notice must make specific reference to this paragraph specifying the causes of the delay in the notice and, if the effects of the occurrence are on-going, provide an initial notification and thereafter the delayed party shall provide regular updates until such time as the effects are fully known. To the extent it is able, the delayed party shall cause the delay to cease promptly and notify the other party when it has done so. The parties will extend the time of completion by contract amendment for a period equal to the time that the results or effects of the delay prevented the delayed party from performing.

b. Excusable Delay is Not a Default. Failure in performance by either party will not constitute default hereunder or give rise to any claim for damages or loss of anticipated profits if and to the extent that such failure was or is being caused by an occurrence of force majeure.

c. Default Diminishes Relief. Entitlement to relief from the effects of an occurrence of force majeure is diminished to the extent that the delay did or will result from the affected party's default unrelated to the occurrence, in which case the other party's normal remedies and the affected party's obligations would apply undiminished.

17. WARRANTIES

17.1 Liens. Contractor warrants that the materials and services when accepted will be and will remain free of liens or other encumbrances.

17.2 Conformity to Requirements. Contractor warrants that, unless expressly provided otherwise elsewhere in the contract, the materials and services will for one (1) year after acceptance and in each instance:

a. Conform to the requirements of the contract, which by way of reminder include without limitation all descriptions, specifications, and drawings identified in the Scope of Work and any Contractor affirmations included as part of the contract;

b. Be free from defects of material and workmanship;

c. Conform to or perform in a manner consistent with current industry standards; and

d. Be fit for the intended purpose or use described in the contract.

Mere delivery or performance does not substitute for express acceptance by County. Where inspection, testing, or other acceptance assessment of materials or services cannot be done until after installation, the forgoing warranty will not begin until County's acceptance.

17.3 Contractor Personnel. Contractor warrants that its personnel will perform their duties under the contract in a professional manner, applying the requisite skills and knowledge, consistent with industry standards, and in accordance with the requirements of the contract. Contractor further warrants that its key personnel will maintain any certifications relevant to their work, and Contractor shall provide individual evidence of certification to the County upon request.

17.4 Compliance with Applicable Laws, Licensing and Permits. Contractor warrants that the materials and services supplied under this Contract do and will continue to comply with all applicable Federal, state and local laws, and the Contractor shall maintain all applicable licenses and permit requirements

17.5 Lobbying. Contractor warrants that it will not engage in lobbying activities as defined in 40 CFR part 34 and A.R.S. § 41-1231, *et seq.*, using monies awarded under the contract. Upon award of the Contract, Contractor shall disclose all lobbying activities to the County to the extent they are an actual or potential conflict of interest or where such activities would create an appearance of impropriety. Contractor shall implement and maintain adequate controls to assure that monies awarded under the contract are not used for lobbying. Subcontractors shall be subject to these same provisions. Contractor shall include "anti-lobbying" provisions in all subcontracts. This paragraph does not apply to the extent that the services are defined in the contract as being lobbying for the County's benefit or on the County's behalf.

17.6 Survival of Rights and Obligations. All representations and warranties made by Contractor under the contract will survive the expiration or earlier termination of the contract. The Contractor shall, in accordance with all terms and conditions of the contract, fully perform and shall be obligated to comply with all purchase orders received by the Contractor prior to the expiration or termination hereof, unless

otherwise directed in writing by the Procurement Officer, including, without limitation, all purchase orders received prior to but not fully performed and satisfied at the expiration or termination of this contract.

18. COUNTY'S CONTRACTUAL REMEDIES

18.1 Right to Assurance. If the County in good faith has reason to believe that the Contractor does not intend to, or is unable to perform or continue performing under this contract, the Procurement Officer may demand in writing that the Contractor give a written assurance of intent to perform. Failure by the Contractor to provide written assurance within the number of days specified in the demand may, at the County's option, be the basis for terminating the contract under the Terms and Conditions or other rights and remedies available by law or provided by the contract.

18.2 Stop Work Order. The County may at any time require Contractor to stop all or any part of the work by written order. Upon receipt of a stop order, the Contractor shall immediately comply with its terms and take all reasonable steps to minimize incurring of further costs during the period of stoppage that might be chargeable to County associated with the portions of the work covered by the order. If Contractor incurs losses, it may make a claim under the Pinal County Procurement Code.

18.3 Non-exclusive Remedies. The County's rights and remedies under the contract are not exclusive.

18.4 Nonconforming Tender. The materials provided and services performed must comply fully with the contract. Providing materials or performing services or any portion thereof that do not comply fully constitutes a breach of contract, in which event the County will be entitled to exercise any remedy available to it under the contract or laws.

18.5 Right to Offset. The County is entitled to offset against any sums due contractor, any expenses or costs the County incurs, or damages the County assessed concerning Contractor's non-conforming performance or failure to carry out the work, including any expenses, costs, and damages to which it is entitled by the contract or laws.

19. CONTRACT TERMINATION

19.1 Termination for Conflict of Interest. Pursuant to A.R.S. § 38-511, the County may terminate this contract within three (3) years after the effective date without penalty or further obligation if any person significantly involved in initiating, negotiating, securing, drafting, or creating the contract on behalf of the County is or becomes an employee or agent of any other party to the contract in any capacity or a consultant to any other party to the contract with respect to the subject matter of the contract. Any such termination will be effective when Contractor receives the County's written notice of the termination unless the notice specifies a later date. The Contractor shall continue to perform, in accordance with the requirements of the Contract, up to the date of termination, as directed in the termination notice.

19.2 Gratuities. The County may by written notice, terminate the contract in whole or in part if the County determines that employment or a gratuity was offered or made by Contractor or a representative of Contractor to any officer or employee of the County for the purpose of influencing the outcome of the procurement or the administration of the contract, or in anticipation of receiving any favorable treatment

concerning the contract or performance of the contract. The County, in addition to any other rights or remedies available to it, will be entitled to recover exemplary damages in the amount of three (3) times the value of the gratuity offered by Contractor.

19.3 Suspension or Debarment. The County may, by written notice to Contractor, terminate the contract immediately if the County discovers that Contractor has been debarred, suspended or otherwise lawfully prohibited from participating in any public procurement activity, including but not limited to, being disapproved as a subcontractor of any public procurement unit or other governmental body. The County has taken Contractor's submittal of the accepted offer and will take its performance under the contract as Contractor's attestation that it is not currently suspended or debarred. If Contractor subsequently becomes suspended or debarred, it shall notify the Procurement Officer immediately.

19.4 Termination for Convenience. The County may terminate the contract when in the best interest of the County, in whole or in part, at any time, and without penalty or recourse on Contractor's part other than as expressly stated in the contract. Upon receipt of the County's written termination notice, Contractor shall stop work as directed in the notice, notify all subcontractors of the termination and its effective date, and minimize any further costs that might be chargeable to the County. The Contractor shall continue to perform, in accordance with the requirements of the Contract, up to the date of termination, as directed in the termination notice.In the event of termination under this paragraph, all documents, data, and reports prepared by Contractor under the contract will become the County's property and Contractor shall deliver it all promptly on demand. Contractor will be entitled to receive just and equitable compensation for necessary and attributable unfinished materials on hand, work in progress, work completed, and work accepted before the effective date of the termination.

19.5 Termination for Default. In addition to the rights reserved to it under the contract, the County may terminate the contract in whole or in part due to Contractor's failure to:

a. Comply with any requirement, term, or condition of the contract;

b. Obtain and maintain all required insurance policies, bonds, licenses, and permits;

c. Make satisfactory progress in carrying out the work; or

d. Failure to conduct business in an ethical or legal manner.

Procurement Officer shall give written notice of the termination and the reasons for it. Upon termination under this paragraph, all documents, data and reports prepared by Contractor under the contract and all necessary and attributable unfinished materials on hand, work in progress, work completed, and work accepted will become County's property, and Contractor shall deliver all of it immediately on demand. The Contractor shall continue to perform, in accordance with the requirements of the Contract, up to the date of termination, as directed in the termination notice. The County may, following termination of the contract

under this paragraph, procure on terms and in the manner it determines to be appropriate materials or services to replace those that were to have been provided or performed by Contractor, and Contractor will be liable to the County for any excess cost the County incurs in procuring such substitutes.

20. CONTRACT CLAIMS

20.1 Claim Resolution. All claims and controversies shall be subject to the Pinal County Procurement Code.

20.2 Arbitration. It is understood and agreed that no provision of any resulting contract shall require arbitration upon the County except by the County's express written consent given subsequent to the execution of the contract. However, if both parties agree, disputes may be resolved through arbitration. The dispute shall be resolved as provided for in A.R.S. § 12-1501, *et seq*. The Contractor shall continue to render the services required by this contract without interruption, notwithstanding the provisions of this section.

PINAL COUNTY

This agreement and exhibits hereto, as well as any purchase orders issued against this agreement, shall constitute the entire agreement between the parties with respect to the goods or services ordered under this agreement. No amendment to this agreement will be effective or binding upon the parties unless set forth in writing.

IN WITNESS THEREOF, the parties have affixed their signatures to this Contract on the date written below.

PINAL COUNTY **31 N. Pinal Street** **Florence, AZ 85132**	**Epifini Landscaping Inc.** **3066 N. Lear Av.** **Casa Grande, AZ 85122**
BY: Mike Goodman	BY: Gregory S. Perez
Mike Goodman	(Name)
Chairman, Pinal County Board of Supervisors	President / Owner
Chairman	(Title)
(Signature)	Gregory S. Perez (Signature)
DATE: March 6, 2024	DATE: 2/01/2024

Approved as to Legal Content:

2-7-24

Pinal County Attorney's Office (Date)

Pinal County Clerk of the Board (Date)

PINAL COUNTY

Exhibit A

Scope of Work

To be included as a separate exhibit to the contract.
The final Scope of Work (SOW) exhibit is the solicitation SOW including addenda and negotiated changes.

PINAL COUNTY

Exhibit B

Contract Pricing

To be included as a separate exhibit to the contract. Pricing reflects final negotiated contract pricing.

PINAL COUNTY

Exhibit C

Responder's Proposal

To be included as a separate exhibit to the contract. This exhibit is made up of the Responder's proposal. Clarification questions asked and supplier responses will be added as part of the Responder's proposal exhibit.

PINAL COUNTY

Exhibit A

Scope of Work

To be included as a separate exhibit to the contract.
The final Scope of Work (SOW) exhibit is the solicitation SOW including addenda and negotiated changes.

PINAL COUNTY

Exhibit B

Contract Pricing

To be included as a separate exhibit to the contract. Pricing reflects final negotiated contract pricing.

PINAL COUNTY

Exhibit C

Responder's Proposal

To be included as a separate exhibit to the contract. This exhibit is made up of the Responder's proposal. Clarification questions asked and supplier responses will be added as part of the Responder's proposal exhibit.

Leo Lew
County Manager

PINAL COUNTY
WIDE OPEN OPPORTUNITY

Angeline Woods
Director, Office of Budget & Finance

To: Pinal County Board of Supervisors

From: Eric Zander, Procurement Officer

Date: March 6, 2024

Re: Contract Award of RFP #243628 Courier Services

Background

Request for Proposal 243628 was published to solicit proposals from qualified suppliers to provide Courier Services for Pinal County Countywide Departments.

Selection Process

Three (3) proposals were received and opened on January 30, 2024, at 2:15 p.m., and three (3) of proposals were deemed responsive and responsible and were evaluated by a four-person committee. Proposals were scored on Capacity of the Responder, Cost, Method of Approach, References, Conformance to Terms and Conditions, and Statement of Work. A summary of the evaluation scores for each Responder is included in the attached Evaluation and Award Determination.

Responders:

Grab My Bag, Inc.
Mercury Delivery Services
Tiffany-Shannon Smith, DBA Express Cargo Nation LLC

Recommendation

After review and scoring of the proposals by the evaluation committee, it is recommended that the Board of Supervisors approve the award of contract RFP 243628 to Mercury Delivery Services. The term of the proposed contract is an initial one (1) year term beginning March 6, 2024 through March 5, 2025 with four (4) one-year optional extensions. The estimated cost to the County for the initial contract term is $100,000.00.

The Board is also requested to authorize the Office of Budget and Finance Director to approve and sign any resulting administrative documents.

Any questions regarding the outcome of this solicitation or resultant contract may be directed to Eric Zander, Procurement Officer.

Respectfully submitted,

Eric Zander

Eric Zander, CSCP
Procurement Officer
(520) 866-6644
Eric.Zander@pinal.gov

Leo Lew
County Manager

PINAL COUNTY
WIDE OPEN OPPORTUNITY

Angeline Woods
Director, Office of Budget & Finance

March 6, 2024

RFP 243628 Courier Services
Evaluation and Award Determination

In accordance with the Pinal County Procurement Code, Mercury Delivery Services has been determined to be the most advantageous to the County based on the evaluation criteria set forth in the solicitation.

Score Tabulation

Supplier	Total / 1,000 pts	A - Conformance / 200 pts	B - Cost / 250 pts	C - B-5 Questionnaire (Q-25GN) / 550 pts	C-1 - C-1 Capacity of Responder / 400 pts	C-2 - C-2 Method of Approach / 150 pts
Mercury delivery services	890 pts	200 pts	250 pts	440 pts	320 pts	120 pts
Grab My Bag, Inc.	773.36 pts	200 pts	133.36 pts	440 pts	320 pts	120 pts
Tiffany Shannon-Smith	718.73 pts	200 pts	188.73 pts	330 pts	240 pts	90 pts

Any questions regarding the outcome of this solicitation or resultant contract may be directed to the Procurement Officer, Eric Zander.

Eric Zander
Procurement Officer
(520) 866-6644
Eric.Zander @pinal.gov

PINAL COUNTY

REQUEST FOR PROPOSAL

Courier Services
243628RFP

Exhibit C: Draft Contract

Table of Contents

1. CONTRACT TERM. 2
2. CONTRACT EXTENSION. 2
3. CONTRACT TYPE. 2
4. PRICING 2
5. INVOICING AND PAYMENTS. 4
6. ARIZONA LAW. 5
7. IMPLIED LAW. 5
8. PUBLIC RECORD. 5
9. CONTRACT ORDER OF PRECEDENCE 5
10. RELATIONSHIP OF THE PARTIES. 5
11. SEVERABILITY 6
12. NO PAROLE EVIDENCE. 6
13. NO WAIVER 6
14. CONTRACT ADMINISTRATION AND OPERATION. 6
15. CONTRACT CHANGES. 10
16. RISKS AND LIABILITIES 11
17. WARRANTIES 17
18. COUNTY'S CONTRACTUAL REMEDIES 17
19. CONTRACT TERMINATION 17
20. CONTRACT CLAIMS 19

PINAL COUNTY

Contract 243628RFP
Courier Services

THIS CONTRACT is entered into by and between Pinal County, (County), whose primary address is 31 N. Pinal St., Bldg. A., Florence, AZ 85132 and Mercury Delivery Services , whose primary address is PO Box 26380 Tempe, AZ 85285

1. CONTRACT TERM. The resultant contract term will commence upon contract execution, and will continue for one (1) year unless canceled, terminated, renewed, or permissibly extended. The County has no obligation to extend or renew the contract past the initial term.

2. CONTRACT EXTENSION. The County shall have the sole option to extend the term of this contract up to a maximum of four (4) additional one-year terms, or at the County's sole discretion, extend the contract on a month to month basis for a maximum of nine (9) months after expiration.

3. CONTRACT TYPE.

   Firm-Fixed Lump Sum Price. The firm-fixed lump sum price is the amount or amounts shown or scheduled as such in the requested Pricing Document, each of which will be Contractor's complete and total compensation for carrying out the relevant portion of the work that it covers; and will not be subject to any adjustment on the basis of Contractor's cost experienced in performing under the contract.

   Except as expressly stated otherwise in the solicitation, Contractor is deemed to have allowed in each firm-fixed lump sum price correct and sufficient amounts to cover all its obligations under or arising from the contract, at law, or otherwise, and to have allowed the necessary resources to enable it to carry out the relevant portion of the work that it covers within any time for performance specified in the Scope of Work.

   3.1 Site Services, Logistics, and Utilities. The Contractor shall provide those items of site services, logistics and utilities that are assigned to them in the Scope of Work. The Contractor shall provide all services, equipment, tools, and logistics necessary for its personnel and otherwise as required to carry out the work, and compensation for all those is deemed to be included in the contractual fee mark-up.

      a. For items indicated to be paid on a "lump sum" basis, Contractor shall request payment for the completed proportion of such items at least monthly.

4. PRICING

   4.1 Most Favored Customer Pricing.
   Contractor warrants that, for the term of the contract, the prices, rates, discounts, terms, and benefits set out in the proposal, including any subsequent agreed upon amendment to it, will be equal to or better than the lowest prices, best rates, largest discounts, and most favorable terms and benefits, both separately and in combination, at which Contractor sells equivalent items. If Contractor provides more favorable pricing, rates, discounts, terms and benefits to any customer, it shall immediately apply all such pricing, rates, discounts, terms and benefits to pending County purchase orders and offer such pricing, rates, discounts, terms and benefits for all future purchases made by the County.

4.2 All-Inclusive Pricing.

Pricing is all-inclusive, including any ancillary fees and costs required to accomplish the Scope of Work and all aspects of Contractor's proposal as accepted by the County. Details of service not explicitly stated in the Scope of Work or in Contractor's proposal, but necessarily a part of, are deemed to be understood by Contractor and included herein. All administrative, reporting, or other requirements, all overhead costs and profit and any other costs toward the accomplishment of the requirements in the contract are included in the pricing provided.

4.3 Price Increase.

The Procurement Officer may review a fully documented request for a rate increase only after the contract has been in effect for two (2) years. Any requested rate increase(s) shall be based on an unmitigatable cost increase to the Contractor that was clearly unpredictable at the time of the offer and is directly correlated to the cost of the goods or services contractually covered.

Any request for rate increase will only be considered at the time of a contract extension and must be submitted ninety (90) days prior to the adjustment. Any request for rate increase shall be a factor in the extension review process and if approved, be implemented by a formal contract change order. The County will have the right to request and receive additional information, statistics, financial records etc., and to direct the content, form, and format of presentation as it deems necessary to validate the Contractor's request for a rate adjustment. Failure to respond to the County's request within the time frames specified will nullify the Contractor's request. The County will determine whether the requested rate increase or alternate option is in its best interest and adjustments will be subject to availability of monies appropriated, if applicable.

4.4 Change Orders.

In the event the County requires any change(s) to the Scope of Work and the Contractor anticipates that the project's approved price may be exceeded as a result of the change, the Contractor shall submit a revised project cost estimate to the requesting department.

The Contractor shall not exceed an approved project's price without prior written approval by the requesting department. If prior approval is not received, the Contractor may be subject to sanctions. The revised project price proposal shall include the following:

a. Changes and/or adjustments caused by the County's change to the Scope of Work for the project, including any adjustments to timeframes for completion of the project.

b. An all-inclusive project price estimate, supported by a detailed cost breakdown to include all costs required to complete the project, as changed by the County.

5. INVOICING AND PAYMENTS.

5.1 Invoices.
The Contractor shall submit detailed, itemized invoice(s) before payment(s) can be made. Incomplete invoices will not be processed. All invoices shall reflect the contracted prices or rates for goods or services as described in the Scope of Work. At a minimum, the invoice must provide the following information:

a. Company name, address and contact
b. County bill-to name and contact information
c. Contract Number
d. County purchase order number
e. Invoice number and date
f. Payment terms
g. Itemized service price as outlined in the Pricing Response Form

Problems regarding billing or invoicing shall be directed to the using department as listed on the Purchase Order. All invoices must be submitted to the following e-mail or postal address:

financeinvoices@pinal.gov
Pinal County Finance Department
Attn: Accounts Payable
PO Box 1348
Florence, AZ 85132

5.3 No Invoice Without Authorization. Contractor shall not seek payment for any:

a. Charges or fees not delineated in the contract.
b. Materials or services that have not been authorized on a purchase order.
c. Expediting, overtime, premiums, or upcharges absent the County's express prior approval.
d. Materials or services that are the subject of a contract amendment or change order that has not been fully signed.

5.4 Timeliness of Invoice. By A.R.S. § 11-622, all invoices must be submitted to the County within six (6) months after service or product is received. Failure to submit an invoice within this period of time will result in non-payment.

5.5 Payments. No payment shall be issued prior to receipt of acceptable goods and/or services and a correct invoice. The County shall make every effort to process payment for acceptable goods or services within thirty (30) calendar days after receipt of said items/services and a correct invoice.

5.6 Payments Only to Contractor. Unless compelled otherwise by operation of law or order of a court of competent jurisdiction, the County will only make payment to Contractor under the federal tax identifier indicated on the accepted offer.

5.7 Payments to Subcontractors. Contractor shall make payment of all undisputed amounts due to Subcontractors, as applicable to their services, within thirty (30) days of receipt of funds from the County.

5.8 Availability of Funds. By A.R.S. § 35-154, every County payment obligation under the contract is conditioned on the availability of funds appropriated for payment of that obligation. If funds are not appropriated and available for continuance of the contract, the County may terminate the contract at the end of the period for which funds are available, or, at County's discretion, allow appropriate amendment to the contract. No liability will accrue to County if it exercises the foregoing right or discretion, and County will have no obligation or liability for any future payments or for any damages as a result of having exercised it.

6. ARIZONA LAW. This contract shall be governed by the law of the State of Arizona and suits pertaining to this contract shall be brought only in the Pinal County Superior Court, Florence, Arizona.

7. IMPLIED LAW. Each provision of law and any terms required by law to be in this contract are a part of this contract as if fully stated herein.

8. PUBLIC RECORD. This contract is a public record and must be retained by the County for a minimum of six (6) years. All contracts are open to public inspection after contract award, except for any portions determined to be confidential by the County.

9. CONTRACT ORDER OF PRECEDENCE. All of the documents forming the contract are complementary. If certain work, requirements, obligations, or duties are set out only in one but not in another, Contractor shall carry out the work as though the relevant work, requirements, obligations, or duties had been fully described on all, consistent with the other documents forming the contract and as is reasonably inferable from them as being necessary to produce complete results. In case of any inconsistency, conflict, or ambiguity among the documents forming the contract and their provisions, they are to prevail in the following order, descending from most dominate to most subordinate, provided that, among categories of documents or provisions having the same rank, the document or provision with the latest date prevails. Information being identified in one document but not in another is not to be considered a conflict or inconsistency.

    a. Written Contract Amendments
    b. Contract
    c. Contract Exhibit(s) A (i.e. Contracted Scope of Work)
    d. Contract Exhibit(s) B (i.e. Contract Pricing Documents)
    e. Contract Exhibit(s) C (i.e. Responder’s Proposal Documents)
    f. Other Contract Exhibits
    g. Orders, in reverse chronological order

10. RELATIONSHIP OF THE PARTIES. The Contractor under this contract is an independent Contractor and shall act in an independent capacity in performance under the contract. Neither party is or is to be construed as being an employee or agent of the other party, and no action, inaction, event, or circumstance will be grounds for deeming it to be so.

11. SEVERABILITY. Any term or condition deemed or adjusted illegal or invalid is thereby stricken from the contract and shall not affect any other term or condition of the contract.

12. NO PAROLE EVIDENCE. The contract, including any documents incorporated into the contact by reference, is intended by the parties as a final and complete expression of their agreement. There are no prior, contemporaneous, or additional agreements, either oral or in writing, pertaining to the contract.

13. NO WAIVER. Either party's failure to insist on strict performance of any term or condition of the contract is not, or will it be deemed to be, a waiver of that term or condition or a bar to, or diminished right of, enforcement of any term or condition.

14. CONTRACT ADMINISTRATION AND OPERATION.

14.1 Notices and Correspondence. Notices required by this Contract shall be made to the following addresses:

County	Contractor
Name: Eric Zander	**Name: Mercury Delivery Services**
Address: **31 North Pinal Street Florence, AZ 85132**	**Address: PO BOX 26380 Tempe, AZ 85285**
Title: Procurement Officer	**Title: Primary Contact**
Email: Purchasing@Pinal.gov	**Email: mercurydeliveryservices@gmail.com**

An authorized County representative and an authorized Contractor representative may change their respective person to whom notice shall be given by written notice to the other and an amendment to the contract shall not be necessary.

14.2 Books and Records. Per A.R.S. § 41-2548(B), Contractor shall retain and shall contractually require each Subcontractor to retain books and records *relating for any cost and pricing data submitted* in satisfaction of § 41-2543 for the period specified in the statute and those retained books and records are subject to audit by the County during that period. Per A.R.S. § 41-2548(B), Contractor shall retain and shall contractually require each Subcontractor to retain books and records *relating to performance under the contract* for the period specified in the statute and those retained books and records are subject to audit by the County during that period. Accordingly, Contractor or Subcontractor shall either make all such books and records available to the County at all reasonable times or produce the records at a designated County office on the County's demand, the choice of which being at the County's discretion. For the purpose of this paragraph, "reasonable times" are during normal business hours and in such a manner so as to not unreasonably interfere with normal business activities.

14.3 Contractor Licenses. Contractor and Subcontractor(s) shall maintain in current status all federal, state, and local licenses and permits required for the operation of its business in general, for its operations under the contract, and if required by this contract, the work itself.

14.4 Inspection and Testing. Per A.R.S. § 41-2547, the County may at reasonable times inspect the part of Contractor's or Subcontractors' plant(s) or places of business related to performance under the contract. Accordingly, Contractor agrees to permit (for itself) and ensure (for Subcontractors) access for inspection at any reasonable time to its facilities, processes, and services. The County may inspect or test, at its own cost, any finished goods, work-in-progress, components, or unfinished materials that are be supplied under the contract or that will be incorporated into something to be supplied under the contract. If the inspection or testing shows non-conformance or defects, the Contractor will owe the County reimbursement or payment of all costs it incurred in carrying out or contracting for the inspection and testing, as well as for any re-inspection or re-testing that might be necessary. Neither inspection of facilities nor testing of goods, work, components, or unfinished materials will of itself constitute acceptance by the County of those things.

14.5 Acceptance of Work.

a. Materials. The County has the right to make acceptance of materials subject to a complete inspection on delivery and installation, if installation is Contractor's responsibility. The County may apply as acceptance criteria conformity to the contract, workmanship and quality, whether the constituent materials used are correct, and any other matter for which the contract or applicable laws state a requirement, whether stated directly or by reference to another document, standard, reference specification, etc. Contractor shall remove any rejected materials from the delivery location, or from any immediate locations to which it might have been reasonably necessary to move it, then inspect it, carry it off the delivery premises, and subsequently deliver an equal number or quantity of conforming items. The County will not owe Contractor any payment for rejected materials, and the County may, at its discretion, withhold or make partial payment for any rejected materials that have been returned to Contractor in those instances where the County has agreed to permit repair instead of demanding replacement.

b. Services. The County has the right to make acceptance of services subject to acceptance criteria. The County may apply as acceptance criteria conformity to the contract, accuracy, completeness, or other indicators of quality, or any other matter for which the contract or law states a requirement, whether stated directly or by reference to another document, standard, reference specification, etc. The County will not owe Contractor any payment for un-accepted services; and the County may, at its discretion, withhold or make partial payment for any rejected services if Contractor is still in the process of re-performing or otherwise curing the grounds for the County's rejection.

14.6 Subcontracts. The Contractor shall not enter into any subcontract under this contract for the performance of this contract without the advance written notice to the Procurement Officer. The Contractor shall clearly list any proposed subcontractors and the subcontractor's proposed responsibilities. It is expressly understood that all persons employed by the Contractor, either directly or indirectly, shall be considered employees or agents of the Contractor and not the County. Nothing contained in any contract or joint venture agreement shall create any contractual relationships between any subcontractor and County, nor shall the same create any obligation on the part of the County to pay any subcontractor. The subcontract shall incorporate by reference the terms and conditions of this contract.

14.7 Non-Discrimination. Contractor shall comply with the State of Arizona Executive Order No. 2009-09 and all other applicable federal, state and local laws, rules, and regulations regarding non-discrimination and equal opportunity, including the Americans with Disabilities Act.

14.8 E-Verify Requirements. As required by A.R.S. § 41-4401, Contractor and each subcontractor warrants compliance with A.R.S. § 23-214(A) and all federal immigration laws and any regulations relating to the immigration status of their employees. Contractor and each subcontractor acknowledge that under A.R.S. § 41-4401, the County retains the legal right to inspect the papers of any Contractor or subcontractor employee who works under the contract to ensure that Contractor or subcontractor is in compliance with the foregoing warranty and understands that a breach of the foregoing warranty under shall be deemed a material breach of the contract that is subject to penalties up to and including termination of the contract.

14.9 Estimated Quantities. Unless expressly stated otherwise in the solicitation, the (a) Contractor shall not impose any minimum dollar amount, item count, services volume, or services duration on orders; (b) County makes no commitment of any kind concerning the quantity or monetary value of activity, work or services actually initiated or completed during the term of the contract; (c) Contractor shall only deliver or perform as authorized by orders; and (d) County is not limited as to the number of orders it may issue for the contract.

14.10 Non-Exclusivity. This contract is entered into with the understanding and agreement that it is for the sole convenience of Pinal County. The County reserves the right to obtain like materials or services from another source when necessary without penalty or obligation. The County reserves the right to make additional awards by aggregate, line item, regional area, or any other division of goods and services as determined to be in the best interest of the County.

14.11 Additions and Deletions to Contract. The County reserves the right to add and/or delete goods or services to the Contract. If a service requirement is deleted, payment to the Contractor will be reduced proportionately, to the amount of service reduced in accordance with the bid price. If additional materials are required from a Contract, prices for such additions will be negotiated between the Contractor and the County.

14.12 Applicable Taxes. The Contractor shall be responsible for paying all applicable taxes. Pinal County is subject to all applicable state and local transaction privilege taxes. The County is exempt from certain federal excise tax on manufactured goods. The County will provide the necessary exemption certificates as evidence. Transaction privilege taxes apply to the sale and are the responsibility of the seller to remit. Failure to collect such taxes from the buyer does not relieve the seller from its obligation to remit taxes. Contractor and all subcontractors shall pay all Federal, state and local taxes applicable to its operation and any persons employed by the Contractor. Contractor shall, and require all subcontractors to hold the County harmless from any responsibility for taxes, damages and interest, if applicable, contributions required under Federal, and/or state and local laws and regulations and any other costs including transaction privilege taxes, unemployment compensation insurance, Social Security and Worker's Compensation. In order to receive payment the Contractor shall have a current I.R.S. W9 Form on file with County unless not required by law.

14.13 Eligible Agencies.
This contract shall be for the exclusive use of Pinal County.

14.14 Transitions. During commencement of the contract the Contractor shall attend transition meetings with outgoing suppliers as requested by the County to coordinate efforts, ease the transition, and minimize disruption in the County's operations. The County may elect to have outgoing suppliers complete some or all of their work or orders in progress to help ensure the safest and most efficient transition possible, even if that scope is covered under the contract with the new supplier. Conversely, the County anticipates having a continued need for the same materials and services upon expiration or earlier termination of the contract. Accordingly, Contractor shall work closely with any new (incoming) supplier and the County to ensure a smooth and complete transfer. The County's representative shall coordinate all transition activities and facilitate joint development of a comprehensive transition plan by both the existing Contractor and the incoming supplier. During the outgoing transition, the County may elect to have the outgoing Contractor complete some or all of their work or orders in progress to help ensure the safest and most efficient transition possible.

14.15 Other Contractors. The County may undertake with its own resources or through award of other contracts to the same or other suppliers, additional or related work. In such cases, the Contractor shall cooperate fully with the County's employees and other suppliers and carefully fit, connect, accommodate, adjust, or sequence its work to the related work by others. Where the contract requires handing-off Contractor's work to others, Contractor shall cooperate as the County instructs regarding the necessary transfer of its work product, services, or records to the County or the other suppliers. Contractor shall not commit or permit any act that interferes with the County's or other suppliers' performance of their work, provided that, the County shall enforce the foregoing section equitably among all its suppliers so as not impose an unreasonable burden on any one of them.

14.16 Work on County Premises.

a. Compliance with Rules. Contractor is responsible for ensuring that its personnel comply with County's rules, regulations, policies, documented practices, and documented operating procedures while delivering or installing materials or performing services on County grounds or in its facilities. For clarity of intent, the foregoing means that if Contractor is required to comply with certain security requirements in order to deliver, install, or perform at that particular location, then it shall do so nonetheless and without entitlement to any additional compensation or additional time for performance if those particular requirements are not expressly stated in the contract. Contractor is reminded that violation under Pinal County Security policy 2.10 to possess a firearm, ammunition, or an explosive device in a County building is a material breach of contract and grounds for termination for default.

b. Protection of Facilities and Grounds. Contractor shall deliver or install the materials and perform the services without damaging any County facilities or grounds. Contractor shall repair or replace any damage it does cause promptly and at its own expense, subject to whatever instructions and restrictions the County needs to make to prevent inconvenience or disruption of operations. If Contractor fails to

make the necessary repairs or replacements and do so in a timely manner, the County will be entitled to exercise its remedies under paragraph 17.5 "Right to Offset."

14.17 Advertising, Publishing, and Promotion of Contract. The Contractor shall not use, advertise or promote information for commercial benefit concerning this contract without the prior written approval of the Procurement Officer.

14.18 Israel Boycott Prohibited. **Pursuant to A.R.S. § 35-393.01(A) and to the extent allowable by law**, if the Contractor engages in for-profit activity and has ten (10) or more employees, and if this agreement has a value of $100,000 or more, the Contractor certifies it is not currently engaged in, and agrees for the duration of this agreement to not engage in, a boycott of goods or services from Israel. This certification does not apply to a boycott prohibited by 50 U.S.C. § 4842 or a regulation issued pursuant to 50 U.S.C. § 4842.

14.19 Use of Forced Labor of Ethnic Uyghurs Prohibited. Pursuant to A.R.S. § 35-394, the use of forced labor, any goods produced by forced labor or contractors or subcontractors that utilize the forced labor of Ethnic Uyghurs in the People's Republic of China is prohibited. Written certification that the contractor complies with this provision shall be submitted to the County. If written certification has been submitted, and the contractor later determines that it is not in compliance with this provision, it shall notify the County within five (5) business days. If the County does not receive notification that within one hundred and eighty (180) days of finding the violation, the company has remedied the violation of this section, the contract will terminate. If the contract naturally or otherwise terminates before the end of the one hundred and eighty (180) day remedy period, the contract terminates on the contract termination date.

15. CONTRACT CHANGES.

15.1 Contract Amendments. The contract is issued under the authority of the Pinal County Board of Supervisors. Only a contract amendment can modify the contract and then only if it does not change the contract's general scope. Purported changes to the contract by a person not expressly authorized by the Procurement Officer or made unilaterally by Contractor will be void and without effect; Contractor will not be entitled to any claim made under the contract based on any such purported changes.

15.2 Signing of Contract Amendments. Contractor's counter-signature (or "approval") of contract modifications is not required to give effect if the contract amendment only covers either:

a. Extension of the term of the contract within the maximum aggregate term;
b. Revision to Procurement Officer appointment or contact information; or
c. Modifications of a clerical nature that have no effect on terms, conditions, price, scope, or other material aspect of the contract.

In every case other than those listed in a, b, and c above, both parties' signature (or "approval") of a contract modification is required to give it effect.

15.3 Assignment and Delegation. Contractor shall not assign in whole its rights or delegate in whole its duties under the contract without the Procurement Officer's prior written consent, which consent the

Procurement Officer may withhold at his or her discretion. The Procurement Officer shall not unreasonably withhold approval of assignment or delegation. If Contractor's proposed assignment or delegation stems from a split, sale, acquisition, or other non-merger change in control, then no such consent will be given in any event without the assignee or delegate giving County satisfactory and equivalent evidence or assurance of its financial soundness, competency, capacity, and qualification to perform as that which Contractor possessed when County first awarded it the contract. This contract and all of the terms, conditions and provisions herein, shall extend to and be binding upon the heirs, administrators, executors, successors, and assigns of the parties hereto.

16. RISKS AND LIABILITIES

16.1 Risk of Loss. Contractor bears all risk of loss to materials while in pre-production, production, storage transit, staging, assembly, installation, testing, and commissioning, if and as those duties are within the Scope of the Work, until they have been received and accepted as conforming by the County at the location designated in the purchase order or contract. Mere receipt does not constitute final acceptance. The risk of loss for nonconforming materials shall remain with the Contractor regardless of receipt.

16.2 Contractor Insurance. The Contractor and any tier of Subcontractor shall purchase and maintain insurance, until all of their obligations have been discharged including any warranty periods under this contract, against claims for injury to persons or damage to property which may arise from or in connection with the performance of work hereunder by the Contractor, his agents, representatives, employees, or Subcontractors. Failure to do so may, at the sole discretion of the County, constitute a material breach of the contract.

The insurance requirements herein are minimum requirements for this contract and in no way limit the indemnity covenants contained in this contract. The County in no way warrants that the minimum limits contained herein are sufficient to protect the Contractor from liabilities that might arise out of the performance of work under this contract by the Contractor, its agents, representatives, employees or subcontractors, and the Contractor is free to purchase additional insurance.

a. Minimum Scope and Limits of Insurance. Contractor shall purchase and maintain coverage with coverages and limits of liability not less than those stated below.

(1) Commercial General Liability (CGL). Commercial General Liability (CGL) Insurance (CG 0001) and, if necessary, Commercial Umbrella insurance with a limit of not less than $1,000,000 for each occurrence, $2,000,000 General Aggregate Limit, and $2,000,000 Completed Operations/Products Aggregate. The policy shall include coverage for bodily injury, broad form property damage, personal injury, products and completed operations and blanket contractual coverage, and shall not contain any provision which would serve to limit third party action over claims.

The policy shall be endorsed, as required by this written agreement, to include Pinal County, its boards, agents, representatives, officers, directors, officials, and employees as additional insureds with respect to liability arising out of the activities performed by or on behalf of the Contractor. The additional insured endorsement shall be at least as broad as the Insurance Services Office, Inc.'s CG 2037 0413 and shall insure the County to the full limits of liability purchased by the Contractor even

if those limits of liability are in excess of the minimum limits required by this contract. Insurance purchased and maintained by the Contractor shall not be limited to the liability assumed under the indemnification and defense covenants of this contract.

The policy shall contain a waiver of transfer of rights of recover (subrogation) against the County, its boards, agents, representatives, officers, directors, officials, and employees for any claims arising out of Contractor's work or service.

(2) Automobile Liability. Commercial/Business Automobile Liability insurance with a combined single limit (CSL) for bodily injury and property damage of not less than $1,000,000 each occurrence with respect to any of the Contractor's owned, hired, and non-owned vehicles assigned to or used in performance of the Contractor's work or services under this contract.

The policy shall be endorsed, as required by this written agreement, to include Pinal County, its boards, agents, representatives, officers, directors, officials, and employees as additional insureds with respect to liability arising out of the activities performed by or on behalf of the Contractor, involving automobiles owned, leased, hired and/or non-owned by the Contractor, and shall insure the County to the full limits of liability purchased by the Contractor even if those limits of liability are in excess of the minimum limits required by this contract. Insurance purchased and maintained by the Contractor shall not be limited to the liability assumed under the indemnification and defense covenants of this contract.

The policy shall contain a waiver of transfer of rights of recover (subrogation) against the County, its boards, agents, representatives, officers, directors, officials, and employees for any claims arising out of Contractor's work or service.

(3) Workers' Compensation and Employer's Liability.

Workers' Compensation	Statutory
Employer's Liability	
Each Accident	$1,000,000
Disease – Each Employee	$1,000,000
Disease – Policy Limit	$1,000,000

Policy shall contain a waiver of subrogation against Pinal County and its officers, officials, agents, and employees for losses arising from work or service performed by or on behalf of the Contractor. This requirement shall not apply to each Contractor this is exempt under A.R.S. 23-901, and when such Contractor executes the appropriate waiver form.

b. Additional Insurance Requirements. The policies shall include, or be endorsed to include the following provisions:

(1) The Contractor's policies, as applicable, shall stipulate that the insurance afforded the Contractor shall be primary and that any insurance carried by the County, its agents, officials, or employees shall be excess and not contributory insurance as provided by A.R.S. § 41-621 E.

(2) Insurance provided by the Contractor shall not limit the Contractor's liability assumed under the indemnification provisions of this contract.

c. Notice of Cancellation. Applicable to all insurance policies required within the insurance requirements of this contract, Contractor's insurance shall not be permitted to expire, be suspended, be canceled, or be materially changed for any reason without thirty (30) days prior written notice to the County.

d. Acceptability of Insurers. Contractor shall purchase and maintain the herein stipulated minimum insurance from a company or companies duly licensed by the State of Arizona and possessing a current A.M. Best rating of not less than A-6. In lieu of State of Arizona licensing, the stipulated insurance may be purchased from a company or companies, which are authorized to do business in the State of Arizona, provided that said insurance companies meet the approval of the County. The County in no way warrants that the above-required minimum insurer rating is sufficient to protect the Contractor from potential insurer insolvency.

e. Verification of Coverage. Contractor shall furnish the County with certificates of insurance or formal endorsements as required by the contract at least fourteen (14) calendar days prior to commencing work or services under the contract. Such certificates shall identify this contract number and project description and shall be sent directly to the attention of Pinal County Purchasing Department. In the event any insurance policy(ies) required by this contract are written on a "claims made" basis, coverage shall extend for two years past completion and acceptance of the Contractor's work or services and as evidenced by annual certificates of insurance. If a policy does expire during the life of the contract, a renewal certificate must be sent to the County a minimum of fourteen (14) calendar days prior to the expiration date. The form of any insurance policies, limits, endorsements and forms must be acceptable to the County. The County shall not be obligated, however, to review such policies and/or endorsements or to advise Contractor of any deficiencies in such policies and endorsements, and such receipt shall not relieve Contractor from, or be deemed a waiver of County's right to insist on strict fulfillment of Contractor's obligations under this Contract.

f. Subcontractors. All coverages for all tiers of Subcontractors shall be subject to the minimum insurance requirements identified above. The County reserves the right to require, at any time throughout the life of this contract, proof from the Contractor that its Subcontractors have the required coverage.

g. Approval and Modifications. The County reserves the right to review or make modifications to the insurance limits, required coverages, or endorsements throughout the life of this contract, as deemed necessary. Such action will not require a formal contract amendment but may be made by administrative action.

16.3 Basic Indemnification. To the fullest extent permitted by law, Contractor shall defend, indemnify, and hold harmless County indemnitees from indemnified basic claims that:

a. Are caused or alleged to be caused in whole or in part by the negligent or willful acts or omissions of a Contractor indemnitor;

b. Arise out of or are recovered under workers' compensation laws; and/or

c. Arise out of a Contractor indemnitor's failure to conform to any federal, state, or local law, statute, ordinance, rule, regulation, or court decree. The parties specifically intend that the Contractor indemnitors shall indemnify the relevant County indemnitees from and against indemnified basic claims in all instances except where the indemnified basic claim arises solely from those County indemnitees' own negligent or willful acts or omissions. Wherever the indemnification under this subparagraph applies, Contractor is responsible for primary loss investigation, defense, and judgment costs for an on behalf of the other Contractor indemnitors with respect to County indemnitees, and accordingly Contractor is also responsible for any cooperation, contribution, or subordination between or amongst the Contractor indemnitors. In consideration of the award of the contract by a County indemnitee, Contractor hereby waives all rights of subrogation against County indemnities for losses arising from the work.

d. It is the specific intention of the County and the Contractor that the County shall, in all instances, except for the gross negligent or willful acts of the County, be indemnified, defended and held harmless by the Contractor from and against any all demands, claims, suits, losses, and damages.

16.4 Force Majeure.

a. Relief From Performance. The parties are not liable to each other if an occurrence of force majeure prevents its performance under the contract. If either party is delayed at any time in the progress of its performance under the contract by an occurrence of force majeure, the delayed party shall notify the other no later than the following working day after the occurrence, or as soon as it could reasonably have been expected to recognize that the occurrence had effect in cases where the effects were not readily apparent. In any event, the notice must make specific reference to this paragraph specifying the causes of the delay in the notice and, if the effects of the occurrence are on-going, provide an initial notification and thereafter the delayed party shall provide regular updates until such time as the effects are fully known. To the extent it is able, the delayed party shall cause the delay to cease promptly and notify the other party when it has done so. The parties will extend the time of completion by contract amendment for a period equal to the time that the results or effects of the delay prevented the delayed party from performing.

b. Excusable Delay is Not a Default. Failure in performance by either party will not constitute default hereunder or give rise to any claim for damages or loss of anticipated profits if and to the extent that such failure was or is being caused by an occurrence of force majeure.

c. Default Diminishes Relief. Entitlement to relief from the effects of an occurrence of force majeure is diminished to the extent that the delay did or will result from the affected party's default unrelated to the occurrence, in which case the other party's normal remedies and the affected party's obligations would apply undiminished.

16.5 Third Party Antitrust Violations. The Contractor assigns to the County any claim for overcharges resulting from antitrust violations to the extent that those violations concern materials or services supplied by third parties to the Contractor, toward fulfillment of this contract.

16.6 Contractor Personnel. Contractor warrants that its personnel will perform their duties under the contract in a professional manner, applying the requisite skills and knowledge, consistent with industry standards, and in accordance with the requirements of the contract. Contractor further warrants that its key personnel will maintain any certifications relevant to their work, and Contractor shall provide individual evidence of certification to the County upon request.

16.7 Data Protection and Confidentiality of Records.

a. Proprietary and Sensitive Data. Contractor warrants that it will establish and maintain procedures and controls acceptable to the County for ensuring that the County's proprietary and sensitive data is protected from unauthorized access and information obtained from County or others in performance of its contractual duties is not mishandled, misused, or inappropriately released or disclosed. For purposes of this paragraph, all data created by Contractor in any way related to the contract, provided to the Contractor by the County or prepared by others for the County are proprietary to the County and all information by those same avenues is the County's confidential information. To comply with the foregoing warrant:

(1) Contractor shall: (i) notify the County immediately of any unauthorized access or inappropriate disclosures, whether stemming from an external security breach, internal breach, system failure, or procedural lapse; (ii) cooperate with the County to identify the source or cause of and respond to each unauthorized access or inappropriate disclosure; and (iii) notify the County promptly of any security threat that could result in unauthorized access or inappropriate disclosures; and

(2) Contractor shall not: (i) release any such data or allow it to be released or divulge any such information to anyone other than its employees or officers as needed for each person's individual performance of his or her duties under the contract, unless the County has agreed otherwise in advance and in writing; or (ii) respond to any requests it receives from a third party for such data or information, and instead route all such requests to the County's designated representative.

b. Personally Identifiable Information. Contractor warrants that it will protect any personally identifiable information ("PII") belonging to the County's employees' or other Contractors or members of the general public that it receives from the County or otherwise acquires in its performance under the contract. (For purposes of this paragraph PII has the meaning given in the [federal] Office of Management and Budget (OMB) Memorandum M-07-16 Safeguarding Against and Responding to the Breach of Personally Identifiable Information; and "protect" means taking measures to safeguard personally identifiable information and prevent its breach that are functionally equivalent to those called for in that OMB memorandum and elaborated on in the [federal] General Services Administration (GSA) Directive CIO P 2180.1 GSA Rules of Behavior for Handling Personally Identifiable Information.)

NOTE: For convenience of reference only, the OMB memorandum is available at: https://www.whitehouse.gov/sites/whitehouse.gov/files/omb/memoranda/2007/m07-16.pdf.
NOTE: For convenience of reference only, the GSA directive is available at: http://www.gsa.gov/portal/directive/d0/content/658222

c. Protected Health Information. Contractor warrants that, to the extent performance under the contract involves individually identifiable health information (referred to hereinafter as protected health information ("PHI") and electronic PHI ("ePHI") as defined in the Privacy Rule referred to below), it:

(1) Is familiar with and will comply with the applicable aspects of the following collective regulatory requirements regarding patient information privacy protection: (i) the "Privacy Rule" in CFR 45 Part 160 and Part 164 pursuant to the Health Insurance Portability and Accountability Act ("HIPAA") of 1996; (ii) Arizona laws, rules, and regulations applicable to PHI/ePHI that are not preempted by CFR 45-160(B) or the Employee Retirement Income Security Act of 1974 ("ERISA") as amended; and (iii) the County's current and published PHI/ePHI privacy and security policies and procedures;

(2) Will cooperate with the County in the course of performing under the contract so that both the County and Contractor stay in compliance with the requirements above and will sign any documents that are reasonably necessary to keep both the County and Contractor in compliance with the requirements above, in particular "Business Associate Agreements" in accordance with the Privacy Rule. NOTE: For convenience of reference only, the Privacy Rule is available at: http://www.hhs.gov/hipaa/for-professionals/privacy/index.html

16.8 Compliance with Applicable Laws, Licensing and Permits. Contractor warrants that the materials and services supplied under this Contract do and will continue to comply with all applicable Federal, state and local laws, and the Contractor shall maintain all applicable licenses and permit requirements.

16.9 Lobbying. Contractor warrants that it will not engage in lobbying activities as defined in 40 CFR part 34 and A.R.S. § 41-1231, *et seq.*, using monies awarded under the contract. Upon award of the Contract, Contractor shall disclose all lobbying activities to the County to the extent they are an actual or potential conflict of interest or where such activities would create an appearance of impropriety. Contractor shall implement and maintain adequate controls to assure that monies awarded under the contract are not used for lobbying. Subcontractors shall be subject to these same provisions. Contractor shall include "anti-lobbying" provisions in all subcontracts. This paragraph does not apply to the extent that the services are defined in the contract as being lobbying for the County's benefit or on the County's behalf.

16.10 Survival of Rights and Obligations. All representations and warranties made by Contractor under the contract will survive the expiration or earlier termination of the contract. The Contractor shall, in accordance with all terms and conditions of the contract, fully perform and shall be obligated to comply with all purchase orders received by the Contractor prior to the expiration or termination hereof, unless otherwise directed in writing by the Procurement Officer, including, without limitation, all purchase orders received prior to but not fully performed and satisfied at the expiration or termination of this contract.

17. COUNTY'S CONTRACTUAL REMEDIES

17.1 Right to Assurance. If the County in good faith has reason to believe that the Contractor does not intend to, or is unable to perform or continue performing under this contract, the Procurement Officer may demand in writing that the Contractor give a written assurance of intent to perform. Failure by the Contractor to provide written assurance within the number of days specified in the demand may, at the County's option, be the basis for terminating the contract under the Terms and Conditions or other rights and remedies available by law or provided by the contract.

17.2 Stop Work Order. The County may at any time require Contractor to stop all or any part of the work by written order. Upon receipt of a stop order, the Contractor shall immediately comply with its terms and take all reasonable steps to minimize incurring of further costs during the period of stoppage that might be chargeable to County associated with the portions of the work covered by the order. If Contractor incurs losses, it may make a claim under the Pinal County Procurement Code.

17.3 Non-exclusive Remedies. The County's rights and remedies under the contract are not exclusive.

17.4 Nonconforming Tender. The materials provided and services performed must comply fully with the contract. Providing materials or performing services or any portion thereof that do not comply fully constitutes a breach of contract, in which event the County will be entitled to exercise any remedy available to it under the contract or laws.

17.5 Right to Offset. The County is entitled to offset against any sums due contractor, any expenses or costs the County incurs, or damages the County assessed concerning Contractor's non-conforming performance or failure to carry out the work, including any expenses, costs, and damages to which it is entitled by the contract or laws.

18. CONTRACT TERMINATION

18.1 Termination for Conflict of Interest. Pursuant to A.R.S. § 38-511, the County may terminate this contract within three (3) years after the effective date without penalty or further obligation if any person significantly involved in initiating, negotiating, securing, drafting, or creating the contract on behalf of the County is or becomes an employee or agent of any other party to the contract in any capacity or a consultant to any other party to the contract with respect to the subject matter of the contract. Any such termination will be effective when Contractor receives the County's written notice of the termination unless the notice specifies a later date. The Contractor shall continue to perform, in accordance with the requirements of the Contract, up to the date of termination, as directed in the termination notice.

18.2 Gratuities. The County may by written notice, terminate the contract in whole or in part if the County determines that employment or a gratuity was offered or made by Contractor or a representative of Contractor to any officer or employee of the County for the purpose of influencing the outcome of the procurement or the administration of the contract, or in anticipation of receiving any favorable treatment concerning the contract or performance of the contract. The County, in addition to any other rights or

remedies available to it, will be entitled to recover exemplary damages in the amount of three (3) times the value of the gratuity offered by Contractor.

18.3 Suspension or Debarment. The County may, by written notice to Contractor, terminate the contract immediately if the County discovers that Contractor has been debarred, suspended or otherwise lawfully prohibited from participating in any public procurement activity, including but not limited to, being disapproved as a subcontractor of any public procurement unit or other governmental body. The County has taken Contractor's submittal of the accepted offer and will take its performance under the contract as Contractor's attestation that it is not currently suspended or debarred. If Contractor subsequently becomes suspended or debarred, it shall notify the Procurement Officer immediately.

18.4 Termination for Convenience. The County may terminate the contract when in the best interest of the County, in whole or in part, at any time, and without penalty or recourse on Contractor's part other than as expressly stated in the contract. Upon receipt of the County's written termination notice, Contractor shall stop work as directed in the notice, notify all subcontractors of the termination and its effective date, and minimize any further costs that might be chargeable to the County. The Contractor shall continue to perform, in accordance with the requirements of the Contract, up to the date of termination, as directed in the termination notice.In the event of termination under this paragraph, all documents, data, and reports prepared by Contractor under the contract will become the County's property and Contractor shall deliver it all promptly on demand. Contractor will be entitled to receive just and equitable compensation for necessary and attributable unfinished materials on hand, work in progress, work completed, and work accepted before the effective date of the termination.

18.5 Termination for Default. In addition to the rights reserved to it under the contract, the County may terminate the contract in whole or in part due to Contractor's failure to:

a. Comply with any requirement, term, or condition of the contract;

b. Obtain and maintain all required insurance policies, bonds, licenses, and permits;

c. Make satisfactory progress in carrying out the work; or

d. Failure to conduct business in an ethical or legal manner.

Procurement Officer shall give written notice of the termination and the reasons for it. Upon termination under this paragraph, all documents, data and reports prepared by Contractor under the contract and all necessary and attributable unfinished materials on hand, work in progress, work completed, and work accepted will become County's property, and Contractor shall deliver all of it immediately on demand. The Contractor shall continue to perform, in accordance with the requirements of the Contract, up to the date of termination, as directed in the termination notice. The County may, following termination of the contract under this paragraph, procure on terms and in the manner it determines to be appropriate materials or services to replace those that were to have been provided or performed by Contractor, and Contractor will be liable to the County for any excess cost the County incurs in procuring such substitutes.

PINAL COUNTY

19. CONTRACT CLAIMS

19.1 Claim Resolution. All claims and controversies shall be subject to the Pinal County Procurement Code.

19.2 Arbitration. It is understood and agreed that no provision of any resulting contract shall require arbitration upon the County except by the County's express written consent given subsequent to the execution of the contract. However, if both parties agree, disputes may be resolved through arbitration. The dispute shall be resolved as provided for in A.R.S. § 12-1501, *et seq*. The Contractor shall continue to render the services required by this contract without interruption, notwithstanding the provisions of this section.

PINAL COUNTY

This agreement and exhibits hereto, as well as any purchase orders issued against this agreement, shall constitute the entire agreement between the parties with respect to the goods or services ordered under this agreement. No amendment to this agreement will be effective or binding upon the parties unless set forth in writing.

IN WITNESS THEREOF, the parties have affixed their signatures to this Contract on the date written below.

PINAL COUNTY **31 N. Pinal Street** **Florence, AZ 85132**	**Mercury Delivery Services PO** **Box 26380** **Tempe, AZ**
BY: Mike Goodman (Name)	BY: Kamyar Hakimnia Kamyar Hakimnia
Chairman, Pinal County Board of Supervisors (Title)	Kamyar Hakimnia Primary Contact
(Signature)	kamyar hakimnia (Signature)
DATE: March 6, 2024	DATE: 02/12/2024

Approved as to Legal Content:

2/16/24

Pinal County Attorney's Office (Date)

Pinal County Clerk of the Board (Date)

PINAL COUNTY

Exhibit A

Scope of Work

To be included as a separate exhibit to the contract.
The final Scope of Work (SOW) exhibit is the solicitation SOW including addenda and negotiated changes.

PINAL COUNTY

Exhibit B

Contract Pricing

To be included as a separate exhibit to the contract. Pricing reflects final negotiated contract pricing.

PINAL COUNTY

Exhibit C

Responder's Proposal

To be included as a separate exhibit to the contract. This exhibit is made up of the Responder's proposal. Clarification questions asked and supplier responses will be added as part of the Responder's proposal exhibit.

Leo Lew
County Manager

Angeline Woods
Office of Budget & Finance Director

PINAL COUNTY
WIDE OPEN OPPORTUNITY

Himanshu Patel
Deputy County Manager

MaryEllen Sheppard
Deputy County Manager

To: Pinal County Board of Supervisors

From: Bobby Tolliver, Procurement Officer

Date: March 6, 2024

Re: Contract Amendment for RFP #204126 – Towing Services for PCSO

It is requested the Board approve a contract term extension with the following list of suppliers that provide Towing Services for PCSO:

A Secure Towing LLC
Absolute Towing and Recovery
Apache Sands
Axle Towing & Impound, LLC
Catalina Towing & Recovery
CL King Towing
D & S Towing
Eddies Towing Inc.
Elite Towing, LLC
Hughes Towing
K & R Towing and Management
Knight Towing LLC
Mammoth Towing & Service
Phoenix Metro Towing
San Tan Valley Towing
Secured Rite Towing
Southwest 24 Hour Towing
Star Towing
Stay Up Towing, LLC

The County has spent approximately $10,000.00 on this contract in the last year and the same is anticipated in the next year of the contact.

The current term of this contract expires on March 14, 2024. The new term, if approved, will begin on March 15, 2024, and will continue through March 14, 2025. After this extension, one (1)-year optional extension will remain.

It is also requested the Board authorize the Director of the Office of Budget and Finance to approve and sign resulting purchase orders and related administrative documents. All other terms and conditions remain unchanged.

Respectfully submitted,

Bobby Tolliver

Bobby Tolliver
Procurement Officer
(520) 866-6011
Bobby.Tolliver @pinal.gov

PINAL COUNTY

Contract Amendment

Pinal County Finance Department
31 N. Pinal Street, PO Box 1348
Florence, AZ 85132
520-866-6526

Contract204126
Amendment #5
Procurement Officer: Bobby Tolliver
Bobby.Tolliver@pinal.gov

Towing Services for PCSO

Contractor Name: A Secure Towing LLC

Pursuant to Paragraph 3 (Contract Extension) and Paragraph 16 (Contract changes), the above referenced contract shall be amended as follows:

1. Contract Term. Pursuant to Paragraph 3 (Contract Extension), the term of this Contract is hereby extended to March 14, 2025.

Except as otherwise expressly modified or amended herein, all other terms, conditions, and pricing contained in the Contract shall remain in full force and effect and shall not be altered or changed by this Amendment.

Pinal County hereby executes its right to unilaterally amend the above referenced contract on this date.

X

Mike Goodman, Chairman
Pinal County Board of Supervisors

X March 6, 2024

Date

PINAL COUNTY

Contract Amendment

Pinal County Finance Department
31 N. Pinal Street, PO Box 1348
Florence, AZ 85132
520-866-6526

Contract204126
Amendment #5
Procurement Officer: Bobby Tolliver
Bobby.Tolliver@pinal.gov

Towing Services for PCSO

Contractor Name: Absolute Towing and Recovery, Inc.

Pursuant to Paragraph 3 (Contract Extension) and Paragraph 16 (Contract changes), the above referenced contract shall be amended as follows:

1. Contract Term. Pursuant to Paragraph 3 (Contract Extension), the term of this Contract is hereby extended to March 14, 2025.

Except as otherwise expressly modified or amended herein, all other terms, conditions, and pricing contained in the Contract shall remain in full force and effect and shall not be altered or changed by this Amendment.

Pinal County hereby executes its right to unilaterally amend the above referenced contract on this date.

X

Mike Goodman, Chairman
Pinal County Board of Supervisors

X March 6, 2024

Date

PINAL COUNTY

Contract Amendment

Pinal County Finance Department
31 N. Pinal Street, PO Box 1348
Florence, AZ 85132
520-866-6526

Contract204126
Amendment #5
Procurement Officer: Bobby Tolliver
Bobby.Tolliver@pinal.gov

Towing Services for PCSO

Contractor Name: Apache Sands

Pursuant to Paragraph 3 (Contract Extension) and Paragraph 16 (Contract changes), the above referenced contract shall be amended as follows:

1. Contract Term. Pursuant to Paragraph 3 (Contract Extension), the term of this Contract is hereby extended to March 14, 2025.

Except as otherwise expressly modified or amended herein, all other terms, conditions, and pricing contained in the Contract shall remain in full force and effect and shall not be altered or changed by this Amendment.

Pinal County hereby executes its right to unilaterally amend the above referenced contract on this date.

X	X March 6, 2024
Mike Goodman, Chairman Pinal County Board of Supervisors	Date

PINAL COUNTY

Contract Amendment

Pinal County Finance Department
31 N. Pinal Street, PO Box 1348
Florence, AZ 85132
520-866-6526

Contract204126
Amendment #5
Procurement Officer: Bobby Tolliver
Bobby.Tolliver@pinal.gov

Towing Services for PCSO

Contractor Name: Axle Towing & Impound LLC

Pursuant to Paragraph 3 (Contract Extension) and Paragraph 16 (Contract changes), the above referenced contract shall be amended as follows:

1. Contract Term. Pursuant to Paragraph 3 (Contract Extension), the term of this Contract is hereby extended to March 14, 2025.

Except as otherwise expressly modified or amended herein, all other terms, conditions, and pricing contained in the Contract shall remain in full force and effect and shall not be altered or changed by this Amendment.

Pinal County hereby executes its right to unilaterally amend the above referenced contract on this date.

X

Mike Goodman, Chairman
Pinal County Board of Supervisors

X March 6, 2024

Date

PINAL COUNTY

Contract Amendment

Pinal County Finance Department
31 N. Pinal Street, PO Box 1348
Florence, AZ 85132
520-866-6526

Contract204126
Amendment #5
Procurement Officer: Bobby Tolliver
Bobby.Tolliver@pinal.gov

Towing Services for PCSO

Contractor Name: Catalina Towing & Recovery

Pursuant to Paragraph 3 (Contract Extension) and Paragraph 16 (Contract changes), the above referenced contract shall be amended as follows:

1. Contract Term. Pursuant to Paragraph 3 (Contract Extension), the term of this Contract is hereby extended to March 14, 2025.

Except as otherwise expressly modified or amended herein, all other terms, conditions, and pricing contained in the Contract shall remain in full force and effect and shall not be altered or changed by this Amendment.

Pinal County hereby executes its right to unilaterally amend the above referenced contract on this date.

X

Mike Goodman, Chairman
Pinal County Board of Supervisors

X March 6, 2024

Date

PINAL COUNTY

Contract Amendment

Pinal County Finance Department
31 N. Pinal Street, PO Box 1348
Florence, AZ 85132
520-866-6526

Contract204126
Amendment #5
Procurement Officer: Bobby Tolliver
Bobby.Tolliver@pinal.gov

Towing Services for PCSO

Contractor Name: CL King Towing

Pursuant to Paragraph 3 (Contract Extension) and Paragraph 16 (Contract changes), the above referenced contract shall be amended as follows:

1. Contract Term. Pursuant to Paragraph 3 (Contract Extension), the term of this Contract is hereby extended to March 14, 2025.

Except as otherwise expressly modified or amended herein, all other terms, conditions, and pricing contained in the Contract shall remain in full force and effect and shall not be altered or changed by this Amendment.

Pinal County hereby executes its right to unilaterally amend the above referenced contract on this date.

X

Mike Goodman, Chairman
Pinal County Board of Supervisors

X March 6, 2024

Date

PINAL COUNTY

Contract Amendment

Pinal County Finance Department
31 N. Pinal Street, PO Box 1348
Florence, AZ 85132
520-866-6526

Contract204126
Amendment #5
Procurement Officer: Bobby Tolliver
Bobby.Tolliver@pinal.gov

Towing Services for PCSO

Contractor Name: D & S Towing

Pursuant to Paragraph 3 (Contract Extension) and Paragraph 16 (Contract changes), the above referenced contract shall be amended as follows:

1. Contract Term. Pursuant to Paragraph 3 (Contract Extension), the term of this Contract is hereby extended to March 14, 2025.

Except as otherwise expressly modified or amended herein, all other terms, conditions, and pricing contained in the Contract shall remain in full force and effect and shall not be altered or changed by this Amendment.

Pinal County hereby executes its right to unilaterally amend the above referenced contract on this date.

X

Mike Goodman, Chairman
Pinal County Board of Supervisors

X March 6, 2024

Date

PINAL COUNTY

Contract Amendment

Pinal County Finance Department
31 N. Pinal Street, PO Box 1348
Florence, AZ 85132
520-866-6526

Contract204126
Amendment #5
Procurement Officer: Bobby Tolliver
Bobby.Tolliver@pinal.gov

Towing Services for PCSO

Contractor Name: Eddies Towing, Inc.

Pursuant to Paragraph 3 (Contract Extension) and Paragraph 16 (Contract changes), the above referenced contract shall be amended as follows:

1. Contract Term. Pursuant to Paragraph 3 (Contract Extension), the term of this Contract is hereby extended to March 14, 2025.

Except as otherwise expressly modified or amended herein, all other terms, conditions, and pricing contained in the Contract shall remain in full force and effect and shall not be altered or changed by this Amendment.

Pinal County hereby executes its right to unilaterally amend the above referenced contract on this date.

X

Mike Goodman, Chairman
Pinal County Board of Supervisors

X March 6, 2024

Date

PINAL COUNTY

Contract Amendment

Pinal County Finance Department
31 N. Pinal Street, PO Box 1348
Florence, AZ 85132
520-866-6526

Contract204126
Amendment #5
Procurement Officer: Bobby Tolliver
Bobby.Tolliver@pinal.gov

Towing Services for PCSO

Contractor Name: Elite Towing LLC

Pursuant to Paragraph 3 (Contract Extension) and Paragraph 16 (Contract changes), the above referenced contract shall be amended as follows:

1. Contract Term. Pursuant to Paragraph 3 (Contract Extension), the term of this Contract is hereby extended to March 14, 2025.

Except as otherwise expressly modified or amended herein, all other terms, conditions, and pricing contained in the Contract shall remain in full force and effect and shall not be altered or changed by this Amendment.

Pinal County hereby executes its right to unilaterally amend the above referenced contract on this date.

X

Mike Goodman, Chairman
Pinal County Board of Supervisors

X March 6, 2024

Date

PINAL COUNTY

Contract Amendment

Pinal County Finance Department
31 N. Pinal Street, PO Box 1348
Florence, AZ 85132
520-866-6526

Contract204126
Amendment #5
Procurement Officer: Bobby Tolliver
Bobby.Tolliver@pinal.gov

Towing Services for PCSO

Contractor Name: Hughes Towing

Pursuant to Paragraph 3 (Contract Extension) and Paragraph 16 (Contract changes), the above referenced contract shall be amended as follows:

1. Contract Term. Pursuant to Paragraph 3 (Contract Extension), the term of this Contract is hereby extended to March 14, 2025.

Except as otherwise expressly modified or amended herein, all other terms, conditions, and pricing contained in the Contract shall remain in full force and effect and shall not be altered or changed by this Amendment.

Pinal County hereby executes its right to unilaterally amend the above referenced contract on this date.

X	X March 6, 2024
Mike Goodman, Chairman Pinal County Board of Supervisors	Date

PINAL COUNTY

Contract Amendment

Pinal County Finance Department
31 N. Pinal Street, PO Box 1348
Florence, AZ 85132
520-866-6526

Contract204126
Amendment #5
Procurement Officer: Bobby Tolliver
Bobby.Tolliver@pinal.gov

Towing Services for PCSO

Contractor Name: K & R Towing and Management, Inc.

Pursuant to Paragraph 3 (Contract Extension) and Paragraph 16 (Contract changes), the above referenced contract shall be amended as follows:

1. Contract Term. Pursuant to Paragraph 3 (Contract Extension), the term of this Contract is hereby extended to March 14, 2025.

Except as otherwise expressly modified or amended herein, all other terms, conditions, and pricing contained in the Contract shall remain in full force and effect and shall not be altered or changed by this Amendment.

Pinal County hereby executes its right to unilaterally amend the above referenced contract on this date.

X	X March 6, 2024
Mike Goodman, Chairman Pinal County Board of Supervisors	Date

PINAL COUNTY

Contract Amendment

Pinal County Finance Department
31 N. Pinal Street, PO Box 1348
Florence, AZ 85132
520-866-6526

Contract204126
Amendment #5
Procurement Officer: Bobby Tolliver
Bobby.Tolliver@pinal.gov

Towing Services for PCSO

Contractor Name: Knight Towing LLC

Pursuant to Paragraph 3 (Contract Extension) and Paragraph 16 (Contract changes), the above referenced contract shall be amended as follows:

1. Contract Term. Pursuant to Paragraph 3 (Contract Extension), the term of this Contract is hereby extended to March 14, 2025.

Except as otherwise expressly modified or amended herein, all other terms, conditions, and pricing contained in the Contract shall remain in full force and effect and shall not be altered or changed by this Amendment.

Pinal County hereby executes its right to unilaterally amend the above referenced contract on this date.

X

Mike Goodman, Chairman
Pinal County Board of Supervisors

X March 6, 2024

Date

PINAL COUNTY

Contract Amendment

Pinal County Finance Department
31 N. Pinal Street, PO Box 1348
Florence, AZ 85132
520-866-6526

Contract204126
Amendment #5
Procurement Officer: Bobby Tolliver
Bobby.Tolliver@pinal.gov

Towing Services for PCSO

Contractor Name: Mammoth Towing & Service

Pursuant to Paragraph 3 (Contract Extension) and Paragraph 16 (Contract changes), the above referenced contract shall be amended as follows:

1. Contract Term. Pursuant to Paragraph 3 (Contract Extension), the term of this Contract is hereby extended to March 14, 2025.

Except as otherwise expressly modified or amended herein, all other terms, conditions, and pricing contained in the Contract shall remain in full force and effect and shall not be altered or changed by this Amendment.

Pinal County hereby executes its right to unilaterally amend the above referenced contract on this date.

X

Mike Goodman, Chairman
Pinal County Board of Supervisors

X March 6, 2024

Date

PINAL COUNTY

Contract Amendment

Pinal County Finance Department
31 N. Pinal Street, PO Box 1348
Florence, AZ 85132
520-866-6526

Contract204126
Amendment #5
Procurement Officer: Bobby Tolliver
Bobby.Tolliver@pinal.gov

Towing Services for PCSO

Contractor Name: Phoenix Metro Towing

Pursuant to Paragraph 3 (Contract Extension) and Paragraph 16 (Contract changes), the above referenced contract shall be amended as follows:

1. Contract Term. Pursuant to Paragraph 3 (Contract Extension), the term of this Contract is hereby extended to March 14, 2025.

Except as otherwise expressly modified or amended herein, all other terms, conditions, and pricing contained in the Contract shall remain in full force and effect and shall not be altered or changed by this Amendment.

Pinal County hereby executes its right to unilaterally amend the above referenced contract on this date.

X

Mike Goodman, Chairman
Pinal County Board of Supervisors

X March 6, 2024

Date

PINAL COUNTY

Contract Amendment

Pinal County Finance Department
31 N. Pinal Street, PO Box 1348
Florence, AZ 85132
520-866-6526

Contract204126
Amendment #5
Procurement Officer: Bobby Tolliver
Bobby.Tolliver@pinal.gov

Towing Services for PCSO

Contractor Name: San Tan Valley Towing

Pursuant to Paragraph 3 (Contract Extension) and Paragraph 16 (Contract changes), the above referenced contract shall be amended as follows:

1. Contract Term. Pursuant to Paragraph 3 (Contract Extension), the term of this Contract is hereby extended to March 14, 2025.

Except as otherwise expressly modified or amended herein, all other terms, conditions, and pricing contained in the Contract shall remain in full force and effect and shall not be altered or changed by this Amendment.

Pinal County hereby executes its right to unilaterally amend the above referenced contract on this date.

X

Mike Goodman, Chairman
Pinal County Board of Supervisors

X March 6, 2024

Date

PINAL COUNTY

Contract Amendment

Pinal County Finance Department
31 N. Pinal Street, PO Box 1348
Florence, AZ 85132
520-866-6526

Contract204126
Amendment #5
Procurement Officer: Bobby Tolliver
Bobby.Tolliver@pinal.gov

Towing Services for PCSO

Contractor Name: Secured Rite Towing

Pursuant to Paragraph 3 (Contract Extension) and Paragraph 16 (Contract changes), the above referenced contract shall be amended as follows:

1. Contract Term. Pursuant to Paragraph 3 (Contract Extension), the term of this Contract is hereby extended to March 14, 2025.

Except as otherwise expressly modified or amended herein, all other terms, conditions, and pricing contained in the Contract shall remain in full force and effect and shall not be altered or changed by this Amendment.

Pinal County hereby executes its right to unilaterally amend the above referenced contract on this date.

X	X March 6, 2024
Mike Goodman, Chairman Pinal County Board of Supervisors	Date

PINAL COUNTY

Contract Amendment

Pinal County Finance Department
31 N. Pinal Street, PO Box 1348
Florence, AZ 85132
520-866-6526

Contract204126
Amendment #5
Procurement Officer: Bobby Tolliver
Bobby.Tolliver@pinal.gov

Towing Services for PCSO

Contractor Name: Southwest 24 Hr Towing

Pursuant to Paragraph 3 (Contract Extension) and Paragraph 16 (Contract changes), the above referenced contract shall be amended as follows:

1. Contract Term. Pursuant to Paragraph 3 (Contract Extension), the term of this Contract is hereby extended to March 14, 2025.

Except as otherwise expressly modified or amended herein, all other terms, conditions, and pricing contained in the Contract shall remain in full force and effect and shall not be altered or changed by this Amendment.

Pinal County hereby executes its right to unilaterally amend the above referenced contract on this date.

X

Mike Goodman, Chairman
Pinal County Board of Supervisors

X March 6, 2024

Date

PINAL COUNTY

Contract Amendment

Pinal County Finance Department
31 N. Pinal Street, PO Box 1348
Florence, AZ 85132
520-866-6526

Contract204126
Amendment #5
Procurement Officer: Bobby Tolliver
Bobby.Tolliver@pinal.gov

Towing Services for PCSO

Contractor Name: Star Towing

Pursuant to Paragraph 3 (Contract Extension) and Paragraph 16 (Contract changes), the above referenced contract shall be amended as follows:

1. Contract Term. Pursuant to Paragraph 3 (Contract Extension), the term of this Contract is hereby extended to March 14, 2025.

Except as otherwise expressly modified or amended herein, all other terms, conditions, and pricing contained in the Contract shall remain in full force and effect and shall not be altered or changed by this Amendment.

Pinal County hereby executes its right to unilaterally amend the above referenced contract on this date.

X	X March 6, 2024
Mike Goodman, Chairman Pinal County Board of Supervisors	Date

PINAL COUNTY

Contract Amendment

Pinal County Finance Department
31 N. Pinal Street, PO Box 1348
Florence, AZ 85132
520-866-6526

Contract204126
Amendment #5
Procurement Officer: Bobby Tolliver
Bobby.Tolliver@pinal.gov

Towing Services for PCSO

Contractor Name: Stay Up Towing LLC

Pursuant to Paragraph 3 (Contract Extension) and Paragraph 16 (Contract changes), the above referenced contract shall be amended as follows:

1. Contract Term. Pursuant to Paragraph 3 (Contract Extension), the term of this Contract is hereby extended to March 14, 2025.

Except as otherwise expressly modified or amended herein, all other terms, conditions, and pricing contained in the Contract shall remain in full force and effect and shall not be altered or changed by this Amendment.

Pinal County hereby executes its right to unilaterally amend the above referenced contract on this date.

X

Mike Goodman, Chairman
Pinal County Board of Supervisors

X March 6, 2024

Date

Leo Lew
County Manager

PINAL COUNTY
WIDE OPEN OPPORTUNITY

Angeline Woods
Director, Office of Budget & Finance

To: Pinal County Board of Supervisors

From: Brisna Canizalez, Procurement Officer

Date: March 6, 2024

Re: Contract Amendment for 205126ROQ On-Call Land Use Planning Services

It is requested the Board approve a contract term extension with the following suppliers who provide land use planning services for the Community Development Division of Development Services:

Michael Baker International, Inc.
Norris Design
PLAN*et Communities

The County has spent approximately $240,000.00 on these contracts in the last year and the same is anticipated in the next year of the contract.

The current term of these contracts will expire on March 27, 2024. The new term, if approved, will begin on March 28, 2024, and will continue through March 27, 2025. After this extension, one (1) one-year optional extension will remain.

It is also requested the Board authorize the Finance Director to approve and sign resulting purchase orders and related administrative documents. All other terms and conditions remain unchanged.

Respectfully submitted,

Brisna Canizalez

Brisna Canizalez
Procurement Officer
520-866- 6223
Brisna.Canizalez@pinal.gov

PINAL COUNTY

Contract Amendment

Pinal County Office of Budget & Finance Department
31 N. Pinal Street, PO Box 1348
Florence, AZ 85132
520-866-6008

Contract 205126ROQ
Amendment #3
Procurement Officer: Brisna Canizalez
Brisna.Canizalez@pinal.gov

On-Call Land Use Planning Services

Contractor Name: **Michael Baker International, Inc.**

Pursuant to Paragraph 15 (Contract Changes), the referenced Contract shall be amended as follows:

1. Contract Term. Pursuant to Paragraph 2 (Contract Extension), the term of this Contract is hereby extended to March 27, 2025.

Except as otherwise expressly modified or amended herein, all other terms, conditions and pricing contained in the Contract shall remain in full force and effect and shall not be altered or changed by this Amendment.

Pinal County hereby executes its right to unilaterally amend the above referenced contract on this date.

X

Mike Goodman, Chairman
Pinal County Board of Supervisors

March 6, 2024
Date

PINAL COUNTY

Contract Amendment

Pinal County Office of Budget & Finance Department
31 N. Pinal Street, PO Box 1348
Florence, AZ 85132
520-866-6008

Contract 205126ROQ
Amendment #3
Procurement Officer: Brisna Canizalez
Brisna.Canizalez@pinal.gov

On-Call Land Use Planning Services

Contractor Name: **Norris Design**

Pursuant to Paragraph 15 (Contract Changes), the referenced Contract shall be amended as follows:

1. Contract Term. Pursuant to Paragraph 2 (Contract Extension), the term of this Contract is hereby extended to March 27, 2025.

Except as otherwise expressly modified or amended herein, all other terms, conditions and pricing contained in the Contract shall remain in full force and effect and shall not be altered or changed by this Amendment.

Pinal County hereby executes its right to unilaterally amend the above referenced contract on this date.

X March 6, 2024

Mike Goodman, Chairman
Pinal County Board of Supervisors

Date

PINAL COUNTY

Contract Amendment

Pinal County Office of Budget & Finance Department
31 N. Pinal Street, PO Box 1348
Florence, AZ 85132
520-866-6008

Contract 205126ROQ
Amendment #3
Procurement Officer: Brisna Canizalez
Brisna.Canizalez@pinal.gov

On-Call Land Use Planning Services

Contractor Name: **PLAN*et Communities**

Pursuant to Paragraph 15 (Contract Changes), the referenced Contract shall be amended as follows:

1. Contract Term. Pursuant to Paragraph 2 (Contract Extension), the term of this Contract is hereby extended to March 27, 2025.

Except as otherwise expressly modified or amended herein, all other terms, conditions and pricing contained in the Contract shall remain in full force and effect and shall not be altered or changed by this Amendment.

Pinal County hereby executes its right to unilaterally amend the above referenced contract on this date.

X _____ March 6, 2024

Mike Goodman, Chairman — Date
Pinal County Board of Supervisors

Leo Lew
County Manager

Angeline Woods
Office of Budget & Finance Director

PINAL COUNTY
WIDE OPEN OPPORTUNITY

Himanshu Patel
Deputy County Manager

MaryEllen Sheppard
Deputy County Manager

To: Pinal County Board of Supervisors

From: Lorina Gillette, Procurement Officer

Date: March 6, 2024

Re: Contract Amendment for ROQ #205226ROQ On-Call Regional Park, Trail & Open Space Planning Services

It is requested the Board approve a contract term extension with the following suppliers who provide on-call regional park, trail and open space planning services for the Parks and Trails Division of Development Services.

Environmental Planning Group, LLC
McGann & Associates, Inc.

The County has spent approximately $195,000 on these contracts in the last year and the same is anticipated in the next year of the contract.

The current term of this contract expires on March 27, 2024. The new term, if approved, will begin on March 28, 2024, and will continue through March 27, 2025. After this extension, one (1) one-year optional extension will remain.

It is also requested the Board authorize the Director of the Office of Budget and Finance to approve and sign resulting purchase orders and related administrative documents. All other terms and conditions remain unchanged.

Respectfully submitted,

Lorina Gillette

Lorina Gillette, CPPB
Procurement Officer
(520) 866-6262
Lorina.Gillette@pinal.gov

PINAL COUNTY

Contract Amendment

The Office of Budget and Finance – Purchasing Division
31 N. Pinal Street, PO Box 1348
Florence, AZ 85132
(520) 866-6008

Contract: 205226ROQ
Amendment #3
Procurement Officer: Lorina Gillette
Lorina.Gillette@pinal.gov

On-Call Regional Park, Trail & Open Space Planning Services

Contractor Name: **Environmental Planning Group, LLC**

Pursuant to Paragraph 15 (Contract Changes), the referenced Contract shall be amended as follows:

1. Contract Term. Pursuant to Paragraph 2 (Contract Extension), the term of this Contract is hereby extended to March 27, 2025.

Except as otherwise expressly modified or amended herein, all other terms, conditions, and pricing contained in the Contract shall remain in full force and effect and shall not be altered or changed by this Amendment.

Pinal County hereby executes its right to unilaterally amend the above referenced contract on this date.

X	X March 6, 2024
Mike Goodman, Chairman Pinal County Board of Supervisors	Date

PINAL COUNTY

Contract Amendment

The Office of Budget and Finance – Purchasing Division
31 N. Pinal Street, PO Box 1348
Florence, AZ 85132
(520) 866-6008

Contract: 205226ROQ
Amendment #3
Procurement Officer: Lorina Gillette
Lorina.Gillette@pinal.gov

On-Call Regional Park, Trail & Open Space Planning Services

Contractor Name: **McGann & Associates, Inc.**

Pursuant to Paragraph 15 (Contract Changes), the referenced Contract shall be amended as follows:

1. Contract Term. Pursuant to Paragraph 2 (Contract Extension), the term of this Contract is hereby extended to March 27, 2025.

Except as otherwise expressly modified or amended herein, all other terms, conditions, and pricing contained in the Contract shall remain in full force and effect and shall not be altered or changed by this Amendment.

Pinal County hereby executes its right to unilaterally amend the above referenced contract on this date.

X	X March 6, 2024
Mike Goodman, Chairman	Date
Pinal County Board of Supervisors	

Leo Lew
County Manager

Angeline Woods
Office of Budget & Finance Director

PINAL COUNTY
WIDE OPEN OPPORTUNITY

Himanshu Patel
Deputy County Manager

MaryEllen Sheppard
Deputy County Manager

To: Pinal County Board of Supervisors

From: Lorina Gillette, Procurement Officer

Date: March 6, 2024

Re: Contract Amendment for 205326ROQ On-Call Traffic Engineering Services

It is requested the Board approve a contract term extension with the following suppliers who provide traffic engineering services for the Development Services Department:

CivTech Inc.
Greenlight Traffic Engineering, LLC
Lee Engineering, LLC
Y2K Engineering, LLC

The County has spent approximately $50,000.00 on these contracts in the last year and the same is anticipated in the next year of the contract.

The current term of these contracts will expire on March 27, 2024. The new term, if approved, will begin on March 28, 2024, and will continue through March 27, 2025. After this extension, two (2) one-year optional extensions will remain.

It is also requested the Board authorize the Finance Director to approve and sign resulting purchase orders and related administrative documents. All other terms and conditions remain unchanged.

Respectfully submitted,

Lorina Gillette

Lorina Gillette, CPPB
Procurement Officer
(520) 866-6262
Lorina.Gillette@pinal.gov

PINAL COUNTY

Contract Amendment

The Office of Budget and Finance – Purchasing Division
31 N. Pinal Street, PO Box 1348
Florence, AZ 85132
(520) 866-6008

Contract: 205326ROQ
Amendment #3
Procurement Officer: Lorina Gillette
Lorina.Gillette@pinal.gov

On-Call Traffic Engineering Services

Contractor Name: **CivTech, Inc.**

Pursuant to Paragraph 15 (Contract Changes), the referenced Contract shall be amended as follows:

1. Contract Term. Pursuant to Paragraph 2 (Contract Extension), the term of this Contract is hereby extended to March 27, 2024.

Except as otherwise expressly modified or amended herein, all other terms, conditions, and pricing contained in the Contract shall remain in full force and effect and shall not be altered or changed by this Amendment.

Pinal County hereby executes its right to unilaterally amend the above referenced contract on this date.

X	X March 6, 2024
Mike Goodman, Chairman Pinal County Board of Supervisors	Date

PINAL COUNTY

Contract Amendment

The Office of Budget and Finance – Purchasing Division
31 N. Pinal Street, PO Box 1348
Florence, AZ 85132
(520) 866-6008

Contract: 205326ROQ
Amendment #3
Procurement Officer: Lorina Gillette
Lorina.Gillette@pinal.gov

On-Call Traffic Engineering Services

Contractor Name: **Greenlight Traffic Engineering, LLC**

Pursuant to Paragraph 15 (Contract Changes), the referenced Contract shall be amended as follows:

1. Contract Term. Pursuant to Paragraph 2 (Contract Extension), the term of this Contract is hereby extended to March 27, 2024.

Except as otherwise expressly modified or amended herein, all other terms, conditions, and pricing contained in the Contract shall remain in full force and effect and shall not be altered or changed by this Amendment.

Pinal County hereby executes its right to unilaterally amend the above referenced contract on this date.

X	X March 6, 2024
Mike Goodman, Chairman Pinal County Board of Supervisors	Date

PINAL COUNTY

Contract Amendment

The Office of Budget and Finance – Purchasing Division
31 N. Pinal Street, PO Box 1348
Florence, AZ 85132
(520) 866-6008

Contract: 205326ROQ
Amendment #3
Procurement Officer: Lorina Gillette
Lorina.Gillette@pinal.gov

On-Call Traffic Engineering Services

Contractor Name: **Lee Engineering, LLC**

Pursuant to Paragraph 15 (Contract Changes), the referenced Contract shall be amended as follows:

1. Contract Term. Pursuant to Paragraph 2 (Contract Extension), the term of this Contract is hereby extended to March 27, 2024.

Except as otherwise expressly modified or amended herein, all other terms, conditions, and pricing contained in the Contract shall remain in full force and effect and shall not be altered or changed by this Amendment.

Pinal County hereby executes its right to unilaterally amend the above referenced contract on this date.

X	X March 6, 2024
Mike Goodman, Chairman Pinal County Board of Supervisors	Date

PINAL COUNTY

Contract Amendment

The Office of Budget and Finance – Purchasing Division
31 N. Pinal Street, PO Box 1348
Florence, AZ 85132
(520) 866-6008

Contract: 205326ROQ
Amendment #3
Procurement Officer: Lorina Gillette
Lorina.Gillette@pinal.gov

On-Call Traffic Engineering Services

Contractor Name: **Y2K Engineering, LLC**

Pursuant to Paragraph 15 (Contract Changes), the referenced Contract shall be amended as follows:

1. Contract Term. Pursuant to Paragraph 2 (Contract Extension), the term of this Contract is hereby extended to March 27, 2024.

Except as otherwise expressly modified or amended herein, all other terms, conditions, and pricing contained in the Contract shall remain in full force and effect and shall not be altered or changed by this Amendment.

Pinal County hereby executes its right to unilaterally amend the above referenced contract on this date.

X	X March 6, 2024
Mike Goodman, Chairman Pinal County Board of Supervisors	Date

Leo Lew
County Manager

Angeline Woods
Budget & Finance Director

PINAL COUNTY
WIDE OPEN OPPORTUNITY

Himanshu Patel
Deputy County Manager

MaryEllen Sheppard
Deputy County Manager

To: Pinal County Board of Supervisors

From: Lorina Gillette, Procurement Officer

Date: March 6, 2024

Re: Contract Amendment for 205426ROQ On-Call Trail Planning and Design Services

It is requested the Board approve a contract term extension with the following suppliers who provide trail planning and design services for the the Parks and Trails Division of Development Services.

American Conservation Experience
McGann & Associates, Inc.

The County has spent approximately $81,000.00 on these contracts in the last year and the same is anticipated in the next year of the contract.

The current term of these contracts will expire on March 27, 2024. The new term, if approved, will begin on March 28, 2024, and will continue through March 27, 2025. After this extension, two (2) one-year optional extensions will remain.

It is also requested the Board authorize the Finance Director to approve and sign resulting purchase orders and related administrative documents. All other terms and conditions remain unchanged.

Respectfully submitted,

Lorina Gillette

Lorina Gillette
Procurement Office
520-866-6262
Lorina.Gillette@pinal.gov

PINAL COUNTY

Contract Amendment

Pinal County Office of Budget & Finance Department
31 N. Pinal Street, PO Box 1348
Florence, AZ 85132
520-866-6008

Contract 205426ROQ
Amendment #3
Procurement Officer: Lorina Gillette
Lorina.Gillette@pinal.gov

On-Call Trail Planning and Design Services

Contractor Name: **American Conservation Experience**

Pursuant to Paragraph 15 (Contract Changes), the referenced Contract shall be amended as follows:

1. Contract Term. Pursuant to Paragraph 2 (Contract Extension), the term of this Contract is hereby extended to March 27, 2025.

Except as otherwise expressly modified or amended herein, all other terms, conditions and pricing contained in the Contract shall remain in full force and effect and shall not be altered or changed by this Amendment.

Pinal County hereby executes its right to unilaterally amend the above referenced contract on this date.

X _____ March 6, 2024

Mike Goodman, Chairman
Pinal County Board of Supervisors

Date

PINAL COUNTY

Contract Amendment

Pinal County Office of Budget & Finance Department
31 N. Pinal Street, PO Box 1348
Florence, AZ 85132
520-866-6008

Contract 205426ROQ
Amendment #3
Procurement Officer: Lorina Gillette
Lorina.Gillette@pinal.gov

On-Call Trail Planning and Design Services

Contractor Name: **McGann & Associates, Inc.**

Pursuant to Paragraph 15 (Contract Changes), the referenced Contract shall be amended as follows:

1. Contract Term. Pursuant to Paragraph 2 (Contract Extension), the term of this Contract is hereby extended to March 27, 2025.

Except as otherwise expressly modified or amended herein, all other terms, conditions and pricing contained in the Contract shall remain in full force and effect and shall not be altered or changed by this Amendment.

Pinal County hereby executes its right to unilaterally amend the above referenced contract on this date.

X _____ March 6, 2024

Mike Goodman, Chairman
Pinal County Board of Supervisors

Date

Leo Lew
County Manager

Angeline Woods
Budget & Finance Director

PINAL COUNTY
WIDE OPEN OPPORTUNITY

Himanshu Patel
Deputy County Manager

MaryEllen Sheppard
Deputy County Manager

To: Pinal County Board of Supervisors

From: Brisna Canizalez, Procurement Officer

Date: March 6, 2024

Re: Contract Amendment for 205626ROQ On-Call Zoning & Subdivision Regulation Services

It is requested the Board approve a contract term extension with the following suppliers who provide zoning and subdivision regulation services for the Community Development Department:

Matrix Design Group, Inc.
Michael Baker International, Inc.

The County has spent approximately $103,000 on these contracts in the last year and the same is anticipated in the next year of the contract.

The current term of these contracts will expire on March 27, 2024. The new term, if approved, will begin on March 28, 2024, and will continue through March 27, 2025. After this extension, one (1) one-year optional extension will remain.

It is also requested the Board authorize the Finance Director to approve and sign resulting purchase orders and related administrative documents. All other terms and conditions remain unchanged.

Respectfully submitted,

Brisna Canizalez

Brisna Canizalez
Procurement Officer
520-866- 6223
Brisna.Canizalez@pinal.gov

PINAL COUNTY

Contract Amendment

Pinal County Office of Budget & Finance Department
31 N. Pinal Street, PO Box 1348
Florence, AZ 85132
520-866-6008

Contract 205626ROQ
Amendment #3
Procurement Officer: Brisna Canizalez
Brisna.Canizalez@pinal.gov

On-Call Zoning & Subdivision Regulation Services

Contractor Name: **Matrix Design Group, Inc.**

Pursuant to Paragraph 15 (Contract Changes), the referenced Contract shall be amended as follows:

1. Contract Term. Pursuant to Paragraph 2 (Contract Extension), the term of this Contract is hereby extended to March 27, 2025.

Except as otherwise expressly modified or amended herein, all other terms, conditions and pricing contained in the Contract shall remain in full force and effect and shall not be altered or changed by this Amendment.

Pinal County hereby executes its right to unilaterally amend the above referenced contract on this date.

X _____ March 6, 2024

Mike Goodman, Chairman — Date
Pinal County Board of Supervisors

PINAL COUNTY

Contract Amendment

Pinal County Office of Budget & Finance Department
31 N. Pinal Street, PO Box 1348
Florence, AZ 85132
520-866-6008

Contract 205626ROQ
Amendment #3
Procurement Officer: Brisna Canizalez
Brisna.Canizalez@pinal.gov

On-Call Zoning & Subdivision Regulation Services

Contractor Name: **Michael Baker International, Inc.**

Pursuant to Paragraph 15 (Contract Changes), the referenced Contract shall be amended as follows:

1. Contract Term. Pursuant to Paragraph 2 (Contract Extension), the term of this Contract is hereby extended to March 27, 2025.

Except as otherwise expressly modified or amended herein, all other terms, conditions and pricing contained in the Contract shall remain in full force and effect and shall not be altered or changed by this Amendment.

Pinal County hereby executes its right to unilaterally amend the above referenced contract on this date.

X _____ March 6, 2024

Mike Godman, Chairman — Date
Pinal County Board of Supervisors

Leo Lew
County Manager

Angeline Woods
Office of Budget & Finance Director

PINAL COUNTY
WIDE OPEN OPPORTUNITY

Himanshu Patel
Deputy County Manager

MaryEllen Sheppard
Deputy County Manager

To: Pinal County Board of Supervisors

From: Lorina Gillette, Procurement Officer

Date: March 6, 2024

Re: Contract Amendment for ROQ #205826ROQ On-Call Archaeological & Environmental Services

It is requested the Board approve a contract term extension with the following suppliers who provide on-call archaeological and environmental services for the Public Works Division of the Development Services Department:

Commonwealth Heritage Group, Inc.
Desert Archaeology
HILGARTWILSON, LLC
SWCA Environmental Consultants

The County has spent approximately $53,000.00 on these contracts in the last year and the same is anticipated in the next year of the contract.

The current term of this contract expires on March 27, 2024. The new term, if approved, will begin on March 28, 2024, and will continue through March 27, 2025. After this extension, one (1) one-year optional extension will remain.

It is also requested the Board authorize the Director of the Office of Budget and Finance to approve and sign resulting purchase orders and related administrative documents. All other terms and conditions remain unchanged.

Respectfully submitted,

Lorina Gillette

Lorina Gillette, CPPB
Procurement Officer
(520) 866-6262
Lorina.Gillette@pinal.gov

PINAL COUNTY

Contract Amendment

The Office of Budget and Finance – Purchasing Division
31 N. Pinal Street, PO Box 1348
Florence, AZ 85132
(520) 866-6008

Contract: 205826ROQ
Amendment #3
Procurement Officer: Lorina Gillette
Lorina.Gillette@pinal.gov

On-Call Archaeological & Environmental Services

Contractor Name: **Commonwealth Heritage Group, Inc.**

Pursuant to Paragraph 15 (Contract Changes), the referenced Contract shall be amended as follows:

1. Contract Term. Pursuant to Paragraph 2 (Contract Extension), the term of this Contract is hereby extended to March 6, 2024.

Except as otherwise expressly modified or amended herein, all other terms, conditions, and pricing contained in the Contract shall remain in full force and effect and shall not be altered or changed by this Amendment.

Pinal County hereby executes its right to unilaterally amend the above referenced contract on this date.

X	X March 6, 2024
Mike Goodman, Chairman Pinal County Board of Supervisors	Date

PINAL COUNTY

Contract Amendment

The Office of Budget and Finance – Purchasing Division
31 N. Pinal Street, PO Box 1348
Florence, AZ 85132
(520) 866-6008

Contract: 205826ROQ
Amendment #3
Procurement Officer: Lorina Gillette
Lorina.Gillette@pinal.gov

On-Call Archaeological & Environmental Services

Contractor Name: **Desert Archaeology**

Pursuant to Paragraph 15 (Contract Changes), the referenced Contract shall be amended as follows:

1. Contract Term. Pursuant to Paragraph 2 (Contract Extension), the term of this Contract is hereby extended to March 6, 2024.

Except as otherwise expressly modified or amended herein, all other terms, conditions, and pricing contained in the Contract shall remain in full force and effect and shall not be altered or changed by this Amendment.

Pinal County hereby executes its right to unilaterally amend the above referenced contract on this date.

X	X March 6, 2024
Mike Goodman, Chairman Pinal County Board of Supervisors	Date

PINAL COUNTY

Contract Amendment

The Office of Budget and Finance – Purchasing Division
31 N. Pinal Street, PO Box 1348
Florence, AZ 85132
(520) 866-6008

Contract: 205826ROQ
Amendment #3
Procurement Officer: Lorina Gillette
Lorina.Gillette@pinal.gov

On-Call Archaeological & Environmental Services

Contractor Name: **HILGARTWILSON, LLC**

Pursuant to Paragraph 15 (Contract Changes), the referenced Contract shall be amended as follows:

1. Contract Term. Pursuant to Paragraph 2 (Contract Extension), the term of this Contract is hereby extended to March 6, 2024.

Except as otherwise expressly modified or amended herein, all other terms, conditions, and pricing contained in the Contract shall remain in full force and effect and shall not be altered or changed by this Amendment.

Pinal County hereby executes its right to unilaterally amend the above referenced contract on this date.

X	X March 6, 2024
Mike Goodman, Chairman Pinal County Board of Supervisors	Date

PINAL COUNTY

Contract Amendment

The Office of Budget and Finance – Purchasing Division
31 N. Pinal Street, PO Box 1348
Florence, AZ 85132
(520) 866-6008

Contract: 205826ROQ
Amendment #3
Procurement Officer: Lorina Gillette
Lorina.Gillette@pinal.gov

On-Call Archaeological & Environmental Services

Contractor Name: **SWCA Environmental Consultants**

Pursuant to Paragraph 15 (Contract Changes), the referenced Contract shall be amended as follows:

1. Contract Term. Pursuant to Paragraph 2 (Contract Extension), the term of this Contract is hereby extended to March 6, 2024.

Except as otherwise expressly modified or amended herein, all other terms, conditions, and pricing contained in the Contract shall remain in full force and effect and shall not be altered or changed by this Amendment.

Pinal County hereby executes its right to unilaterally amend the above referenced contract on this date.

X	X March 6, 2024
Mike Goodman, Chairman Pinal County Board of Supervisors	Date

PINAL COUNTY
WIDE OPEN OPPORTUNITY

Purchase Order

Pinal County Finance Department
Purchasing Division
P.O. Box 1348
Florence, AZ 85132

PO Number
251318
This number must appear on all documents pertaining to this order.

PO Date: 2/22/2024
Page: 1 of 1

Mail Invoice to:	Ship to:	Supplier:
Pinal County Finance Department P.O. Box 1348 Florence, AZ 85132 **Or** **email invoice to:** FinanceInvoices@pinal.gov	PUBLIC DEFENSE SERVICES 971 JASON LOPEZ CIRCLE BLDG G FLORENCE AZ 85132	NET TRANSCRIPTS PO BOX 95777 CHICAGO IL 60694-5777 Phone: 800 - 942-4255 Fax: 480 - 556-9676 **Confirming to:**

Buyer: Diane Mendoza, Buyer
Phone: 520 - 866-6269
Email: Diane.Mendoza@pinal.gov

Requested Delivery Date: 6/30/2024
Payment Terms: Net 30
Shipping Terms: FOB Destination

The terms and conditions of the following contract apply to this Purchase Order:

Contract Entity State of Arizona
Contract Number CTR055242
Contract Expiry 6/30/2024

Reference: ** This is a blanket purchase order for the period 07/01/2023 to 06/30/2024**
Department Contact: Paul Lovelis (520) 866-6845 paul.lovelis@pinal.gov

Line	Quantity	UOM	Item Number	Item Description	Unit Cost	Extended Cost
1		LS		BPO 23/24 Trascription Service Public Defender Transcription	$0.00	$50,000.00
2		LS		BPO 23/24 Trascription Service Contract Atty Transcription	$0.00	$50,000.00
3		LS		BPO 23/24 Trascription Service Capital Atty Transcription	$0.00	$30,000.00

Total Order : $130,000.00

NOTE :
Failure to send invoice to above address will result in delay of payment.
Direct all payment questions to Accounts Payable at 520-866-6397.
Direct all other inquiries to the Buyer specified above.

By accepting this Purchase Order the supplier agrees to the terms and conditions located on the Purchasing Website unless otherwise directed on this PO

	Contract Amendment	Arizona Department of Administration State Procurement Office 100 N 15th Avenue Phoenix, AZ 85007
	Contract: CTR055242. **Amendment: 2.**	
	Supplier: Net Transcripts	
	Service: **Statewide Court Reporting and Transcription Services.**	

This Contract Amendment Number **2** to extend the Contract period of **July 1, 2023** through **June 30, 2024** is hereby executed in accordance with Section 3.2, Contract Extensions, Section 3.4, Signing of Contract Amendments, and Section 5.1, Contract Amendments, of the Special Terms and Conditions and is effective as of **May 1, 2023**.

RECITALS

The State and Supplier entered into that certain agreement title Master Service Agreement, effective as of **July 1, 2021** pursuant to which Supplier is to provide **Statewide Court Reporting and Transcription Services**.

Thereafter, Amendment Number **1** to extend Contract period of **July 1, 2022** through **June 30, 2023** was executed on **June 1, 2022**.

ALL OTHER REQUIREMENTS, SPECIFICATIONS, TERMS AND CONDITIONS REMAIN UNCHANGED

This amendment shall be fully executed upon the electronic approval in the State e-Procurement system by an authorized representative of the Contractor and applied to the contract in the State e-Procurement system by the Procurement Officer or delegate.

PINAL COUNTY
WIDE OPEN OPPORTUNITY

AGENDA ITEM

March 6, 2024 ADMINISTRATION BUILDING A
FLORENCE, ARIZONA

REQUESTED BY:

Funds #:

Dept. #:

Dept. Name: Clerk of the Board

Director: Natasha Kennedy

BRIEF DESCRIPTION OF AGENDA ITEM AND REQUESTED BOARD ACTION:

Discussion/approval/disapproval of Minutes from February 7, 2024, Regular Meeting of the Board of Supervisors. (Natasha Kennedy)

BRIEF DESCRIPTION OF THE FISCAL CONSIDERATIONS AND/OR EXPECTED FISCAL IMPACT OF THIS AGENDA ITEM:

BRIEF DESCRIPTION OF THE EXPECTED PERFORMANCE IMPACT OF THIS AGENDA ITEM:

MOTION:

Approve as presented.

History

Time	Who	Approval
5/10/2021 1:27 PM	Clerk of the Board	Yes

ATTACHMENTS:

Click to download

Minutes

PINAL COUNTY
WIDE OPEN OPPORTUNITY

PINAL COUNTY BOARD OF SUPERVISORS
REGULAR SESSION
MINUTES
Wednesday, February 7, 2024
9:32 AM

BOARD OF SUPERVISORS

Chairman Mike Goodman
Supervisor, District 2

Vice-Chairman Jeffrey McClure
Supervisor, District 4

Kevin Cavanaugh
Supervisor, District 1

Stephen Q. Miller
Supervisor, District 3

Jeff Serdy
Supervisor, District 5

PINAL COUNTY ADMINISTRATIVE COMPLEX
BOARD OF SUPERVISORS HEARING ROOM
135 N. PINAL STREET
FLORENCE, AZ 85132

All Presentations are attached to the Agenda at:
Click Here to View the Regular Session Agenda

and a Video Recording of this meeting can be viewed at:
Click Here to View Video Recording

Chairman Goodman offered for the Invocation by Pastor Richard Wright, Cornerstone Community Church, Coolidge, AZ and the pledge of allegiance by Vice-Chairman McClure.

The Pinal County Board of Supervisors convened at 9:32 a.m. this date. The meeting was called to order by Chairman Goodman.

Members Present: Chairman Mike Goodman; Vice-Chairman Jeffrey McClure; Supervisor Kevin Cavanaugh; Supervisor Stephen Q. Miller; Supervisor Jeff Serdy

Staff Present: County Manager, Leo Lew; Chief Civil Deputy County Attorney, Chris Keller; Clerk of the Board, Natasha Kennedy and Deputy Clerk of the Board, Kelsey Pickard

(1) Call to the Public - Consideration and discussion of comments from the public. Those wishing to address the Pinal County Board of Supervisors need not request permission in advance. Action taken as a result of public comment will be limited to directing staff to study the matter or rescheduling the matter for further consideration and decision at a later date.
Click Here for Call to the Public Guidelines

Chairman Goodman reminded the public, please follow the Call to Public Guidelines established, be respectful and courteous of one another even in difference, and Board Members are limited by statute we can only provide direction to Staff to study the matter.

The following members of the public appeared before the Board and spoke:

- Regarding concerns with the Pinal County Republican Committee (PCRC) conversion process to a limited liability company, requested an investigation be completed, and for the Record provided documents to the Clerk of the Board; Shirley Carter, Eloy.
- Regarding Election concerns; comment at previous Board Meeting by Chairman Goodman, open dialogue by Dana Lewis, Recorder, provisional ballot disenfranchisement, and requested an investigation be completed; Jon Orton, Eloy.
- Regarding concerns of the current District representation on the Transportation Advisory Committee, and requested review of the Bylaws; George Arredondo, Coolidge.
- Regarding the Tax Exemption deadline, and Notice of Value mailing; Douglas Wolf, Assessor.
- Regarding positive governance on today's agenda, concerns with democracy and a government shutdown; Noel Reck, Eloy.

Chairman Goodman requested Mr. Orton reiterate his previous comment.

Jon Orton restated his concerns regarding the Elections comment made during the January 17, 2024, Board Meeting by Chairman Goodman.

Supervisor Cavanaugh directed Staff review the Transportation Advisory Committee Bylaws to determine whether a person can be removed for cause as a result of Redistricting.

10:15 a.m. – Chairman Goodman returned to Item 1 to provide direction to Staff.

Chairman Goodman provided the following direction to Staff; review the authority the Board has regarding PCRC, and requested a prompt report on provisional ballots and FBI standards in regards to cameras and compliance.

Item Action: Public Comments

9:47 a.m. – Chairman Goodman called Item 19 out of order.

10:30 a.m. – Chairman Goodman having heard Items 18 and 19 out of order returned to Item 2 on the agenda.

(2) County Manager's Report (Information Only). (Leo Lew)

Leo Lew, County Manager provided the following updates regarding Pinal County and our Cities and Towns recent engagement in professional associations; International City County Management Association, State Affiliation Chapter recently held a conference, recognized and thanked Cynthia Seelhammer, Pinal County resident who received lifetime member recognition, and for the Record provided a presentation to the Clerk of the Board.

Chairman Goodman echoed Leo Lew's recognition of Cynthia Seelhammer.

Leo Lew recognized Bryant Powell, City Manager, Apache Junction who received the John J. DeBolske Professional Excellence Award for his contributions to local government and community service.

Supervisor Serdy spoke regarding the importance of partnerships and connectivity with our Cities and Towns.

Leo Lew highlighted the panel of those in attendance at the Arizona City County Management Association, advised as part of their Strategic Plan they developed a Management Academy, and provided an overview.

Christopher Wanamaker, County Engineer appeared before the Board, expressed gratitude for the opportunity to participate in the leadership program, citing practical hands-on experience and valuable insights gained.

Angeline Woods, Office of Budget and Finance Director appeared before the Board expressed gratitude for the opportunity to participate and grow in leadership, having left with a renewed sense of purpose.

Item Action: Information Only

(3) Supervisor District update(s) regarding notable current or upcoming events concerning the district (Information Only). (Mike Goodman)

Supervisor Cavanaugh provided the following District #1 Update(s); Pizza with Police, City of Maricopa tonight at 5:00 p.m., Save the Date for the Hayduke Building Dedication Event on February 21st, immediately following the Board of Supervisors Meeting, located at 392 South Main Street, Coolidge, the 79th Anniversary of the Iwo Jema Flag Raising on Saturday, February 24th at 8:30 a.m. at Ira Hayes Veterans Memorial Park, Sacaton, and the annual Community Cleanup Event was held last Saturday, mark your calendars for next year.

Vice-Chairman McClure provided the following District #4 Update(s); Saddlebrooke State of the County Meeting was held January 23rd with a discussion regarding TIMP Tax, Merrill Ranch State of the County Meeting is on February 27th from 10:30 a.m. to 12:00 p.m. at the Community Center, followed by Video.

Supervisor Serdy provided the following District #5 Update(s); Gold Canyon Recreation Area improvements are underway by the Bureau of Land Management and illegal campers are being removed.

Chairman Goodman provided the following District #2 Update(s); Video played, highlighted the success of The HomeDepot cleanup, advised citizen of resources to address illegal dumping, parking, and trespassing on private property, and spoke regarding regularly scheduled Homeowners Associations Informational Meetings, details are posted on District #2 website.

Item Action: Information Only

(4) Announcement: Supervisor Jeff Serdy appointment of Jamie Suzanne Sullivan to the Open Space & Trails Advisory Commission, term of service through April 2026. (Natasha Kennedy)

Supervisor Serdy spoke regarding the appointment of Jaime Sullivan to the Open Space and Trails Advisory Commission, her knowledge, and work with Apache Junction Parks and Recreation.

Item Action: Information Only

Chairman Goodman announced the Board may take recess around 12:30 p.m.

(5) Presentation by the Pinal County Attorney's Office acknowledging the participants of the Paint Pinal Purple Event. (Kent Volkmer)

Kent Volkmer, County Attorney appeared before the Board, invited the contest winners to join him at the dais, presented, thanked all participants, Board, and Staff, and challenged everyone for October 2024 to Paint Pinal Purple.

Item Action: Information Only

(6) Discussion and update(s) regarding the 2024 state and federal legislative session, including bills, budget proposals, committee hearings, and pending or proposed upcoming legislation requests from Board of Supervisor members, state or federal legislators, or their staff in attendance. (Stephen Miller)

Supervisor Miller provided Legislative Update(s); focused on legislation affecting counties and noted future discussions; tiny homes, water, and transportation.

Discussion held regarding pending legislation; tiny home project and splitting Maricopa County by the following Board Members; Supervisor Cavanaugh, and Supervisor Miller.

Item Action: Information Only

(7) Purchasing Division Report - February 7, 2024. (Angeline Woods)

Angeline Woods, Office of Budget and Finance Director appeared before the Board and presented.

Supervisor Cavanaugh requested to discuss K & H Printing in Executive Session and requested clarification regarding Integrated Ballistic Identification System (IBIS) Forensic Technology.

Kent Volkmer, County Attorney appeared before the Board and presented regarding IBIS Forensic Technology, this equipment will provide necessary local resources for shell casings.

Discussion held regarding request for proposal (RFP) 241729, K & H Election Services, printing and mailing of election materials, method approach by the following Board Member and Staff; Supervisor Cavanaugh, and Angeline Woods.

Motion Made By: Supervisor Cavanaugh

To convene into Executive Session.

Motion Failed Due to Lack of Second

Supervisor Cavanaugh expressed concerns regarding obtaining ballots on time and securely.

Angeline Woods confirmed that discussion would have happened amongst the evaluation team which cannot be disclosed at this time.

Item Action: Approved the Purchasing Division Report as presented

Main Motion Made By: Supervisor Cavanaugh

To approve the Purchasing Division Report exclusive of Item 4 RFP 241729, and continue Item 4 RFP 241729 to the next Regular Meeting.

Further discussion held regarding RFP 241729 by the following Board Members and Staff; Chairman Goodman, Vice-Chairman McClure, Supervisor Miller, Dana Lewis, Recorder, and Angeline Woods.

Main Motion Failed Due to Lack of Second

Subsidiary Motion Made By: Supervisor Miller Seconded By: Supervisor McClure

To approve the Purchasing Division Report as presented.

Subsidiary Motion Passed

Ayes: Cavanaugh, Goodman, McClure, Miller, Serdy (5)

(8) CONSENT ITEMS:

All items indicated by an asterisk (*) will be handled by a single vote as part of the consent agenda, unless a Board Member, County Manager, or member of the public objects at the time the agenda item is called.

Chairman Goodman announced he has pulled Items G and T, Supervisor Serdy has requested to pull Items AG and AH, and asked if there were any requests from a Board Member, staff or the audience to remove any additional consent agenda items for discussion.

Supervisor Cavanaugh requested to pull Items AD, AI, and K.

Roberto Reveles, Gold Canyon requested to pull Item N.

Item Action: Approved Consent Agenda Items A through AO, Minus G, K, N, T, AD, AG, AH, and AI.

Motion Made By: Supervisor McClure Seconded By: Supervisor Miller

To approve Consent Agenda Items A through AO, Minus G, K, N, T, AD, AG, AH, and AI.

Motion Passed

Ayes: Cavanaugh, Goodman, McClure, Miller, Serdy (5)

For the Record, the pulled Consent Agenda Items were heard in the following order: G, T, AG, AH, AD, AI, K, and N.

* A. Discussion/approval/disapproval of Minutes from December 20, 2023, Regular Meeting of the Board of Supervisors. (Natasha Kennedy)

* B. Discussion/approval/disapproval of the current billings before the Board. (Natasha Kennedy)

* C. Discussion/approval/disapproval of the recommendation to the Arizona Department of Liquor License and Control for the Special Event License Application of Dana Klose for the Sinister Night Run Event to be held at San Tan Mountain Regional Park, located at 6533 W. Phillips Road, Queen Creek, AZ 85142 on Saturday, April 20, 2024, from 5:00 p.m. to 1:00 a.m. Additionally, authorizing the Clerk of the Board to execute and submit all necessary documents to the State. Supervisor District #1. (Natasha Kennedy)

* D. Discussion/approval/disapproval of the recommendation to the Arizona Department of Liquor License and Control of application, series 009 Liquor Store of Maria Danielle Burgess for Circle K Store #9572 located at 10356 N. Pinal Avenue, Casa Grande, AZ 85122 and authorize the Clerk of the Board to execute and submit all necessary documents to the State. Supervisor District #3. (Natasha Kennedy)

* E. Discussion/approval/disapproval of the reappointment of Carlos Carranza, Stanfield, AZ 85172 to the Agriculture Extension Board. Carlos Carranza's Term of Service will continue through July 29, 2025. This reappointment has been recommended for approval by the University of Arizona County Extension Agent. (Natasha Kennedy)

* F. Discussion/approval/disapproval of the reappointment of Eugenia Slater, Kearny, AZ 85637 to the Air Quality Control Hearing Board, term of service will be from January 9, 2024, through January 8, 2027. (Natasha Kennedy)

Item G Pulled from Consent Agenda

* G. Discussion/approval/disapproval of agreement between Pinal County District 2 Office and Quick Quack Car Wash for Bike Rodeo car wash fundraising event. Percentage of car wash proceeds will be given to Pinal County and utilized to repair donated bikes and cover costs of District 2 Bike Rodeo. Terms and Conditions outlined in attached agreement. (Mike Goodman)

Chairman Goodman spoke regarding the local Bike Rodeo for youth in San Tan Valley and thanked Quick Quack Car Wash for their support.

Item Action: Approved Consent Agenda Item G as presented

Motion Made By: Supervisor McClure Seconded By: Supervisor Miller

To approve Consent Agenda Item G as presented.

Motion Passed

Ayes: Cavanaugh, Goodman, McClure, Miller, Serdy (5)

* H. Discussion/approval/disapproval of an Intergovernmental Agreement (IGA) between Pinal County and the City of Coolidge. This IGA is for contracting animal care and control services, jointly exercising powers common to the contracting parties, and taking joint cooperative action pursuant to A.R.S. 11-952. This is at no cost to the County. The term of this contract will be July 2023, until June 2024. (Audra Michael/MaryEllen Sheppard)

* I. Discussion/approval/disapproval of the General Services Contract New Hope Program between Pinal County Animal Care and Control and Central Arizona Animal Rescue, Moseley's Mutt Oasis, Saving Paws, Living The Dream Rescue, Fiona's Family Rescue, The Gud Ark Animal Rescue, Arizona Border Collie Rescue, and Suncatcher Sanctuary. These contracts will expire in 2027, and are at no cost to Pinal County. (Audra Michael/MaryEllen Sheppard)

* J. Discussion/approval/disapproval of Amendment No. 2 to Award Agreement 546-23 under the Local Coalition to End Homelessness Capacity Building Grant between the Arizona Department of Housing and Pinal County, through the Pinal County Board of Supervisors, effectively changing the agreement end date to June 30, 2024, and increasing the award amount by $60,000, for a total award of $180,000. This grant will be used by the Office of Budget and Finance to manage the Pinal County Coalition to End Homelessness Capacity Building Grant which provides diversion and landlord incentives to prevent persons from becoming or remaining homeless. Acceptance requires an amendment to the FY23/24 budget to transfer reserve appropriation from Fund 213 (Grants/Project Contingency) to Fund 266 (MISC Grants) to increase revenues and expenditures. There is no impact on the General Fund. (Heather Patel/Angeline Woods)

Item K Pulled from Consent Agenda

* K. Discussion/approval/disapproval to submit a grant application to the Arizona Department of Housing's Owner Occupied Emergency Repair Program for $225,000 and approve the program guidelines. This grant will be used by the Office of Budget and Finance to supplement the county's existing owner occupied housing rehabilitation program by providing emergency repair services to eligible households in accordance with the grant program requirements. (Heather Patel/Angeline Woods)

Supervisor Cavanaugh highlighted the important work being done by the Housing Department to repair existing homes, and requested Staff bring awareness to the process.

Heather Patel, Office of Budget and Finance appeared before the Board explained the Emergency Repair Program, On Call List of Vendors, Vendors are sought periodically noting plumbers and electricians are harder to find.

Discussion held regarding Vendors; local companies, federal requirements, and email list by the following Board Members and Staff; Chairman Goodman, Supervisor Miller, and Heather Patel.

Item Action: Approved Consent Agenda Item K as presented

Motion Made By: Supervisor Cavanaugh Seconded By: Supervisor Miller

To approve Consent Agenda Item K as presented.

Motion Passed

Ayes: Cavanaugh, Goodman, McClure, Miller, Serdy (5)

* L. Discussion/approval/disapproval for a retroactive approval to submit a grant application to the Arizona Department of Housing's Local Jurisdiction Affordable Housing Plans Grant for $200,000. This grant will be used by the interdepartmental Affordable Housing Task Force to create an actionable plan that will 1. Identify creative solutions for housing, 2. Create an action plan to implement those solutions, 3. Address infrastructure needs and identify solutions to those needs, and 4. Address statutory requirements, ordinances, and zoning regulations that hinder the development of affordable housing and identify solutions. (Heather Patel/Angeline Woods)

* M. Discussion/approval/disapproval of Amendment No. 1 to a Subrecipient Agreement between Community Action Human Resource Agency and Pinal County, through the Pinal County Board of Supervisors beginning April 26, 2023, ending June 30, 2024, for $120,000. The amendment will increase the award to $180,000 and will include funding to implement a landlord incentive and diversion program. (Heather Patel/Angeline Woods)

Item N Pulled from Consent Agenda

* N. Discussion/approval/disapproval of the retroactive submission of a grant application to the Arizona Department of Economic Security for additional Workforce Innovation and Opportunity Act (WIOA) funds for $516,802. This grant will be used by the Economic and Workforce Development Department to serve 50 Adult Probationers from February to June 2024 to address the unique barriers faced by individuals re-entering the workforce after a felony conviction. (Joel Millman/James Smith)

Roberto Reveles, Gold Canyon appeared before the Board, commended Economic and Workforce Development Department for their work to help former felons return to the workforce and inquired if restoration of voting rights is part of the process.

Joel Millman, Workforce Development Manager, deferred to legal however, clarified skills training is the focus of this program.

Chris Keller, Chief Civil Deputy County Attorney, confirmed this program is for skills training and believes it would not include the restoration of voting rights.

Michael Summers, San Tan Valley appeared before the Board and spoke regarding his past work with Governor Ducey's Office and the Maricopa County Sheriff's Office Re-Entry Program which assisted felons with restoration of voting rights.

Chris Keller advised at a recent Board Meeting we had a presentation on the Sheriff's Office Re-Entry Program.

Chairman Goodman directed Chris Keller to confirm restoration of voting rights is offered as part of the Sheriff's Office Re-Entry Program.

Chris Keller acknowledged the request.

Item Action: Approved Consent Agenda Item N as presented

Motion Made By: Supervisor McClure Seconded By: Supervisor Miller

To approve Consent Agenda Item N as presented.

Motion Passed

Ayes: Cavanaugh, Goodman, McClure, Miller, Serdy (5)

* O. Discussion/approval/disapproval to retroactively accept an award for additional Workforce Innovation and Opportunity Act (WIOA) funds between the Arizona Department of Economic Security and the Pinal County Workforce Development Board, through the Pinal County Board of Supervisors, beginning July 10, 2023, ending June 30, 2024, for $325,000. This funding will be used by the Economic and Workforce Development Department to serve individuals who qualify for the WIOA Dislocated Worker Program and support Rapid Response activities. Acceptance requires an amendment to the FY23/24 budget to transfer reserve appropriation from Fund 213 (Grants/Project Contingency) to Fund 298 (ED-Workforce Innovation- WIOA) to increase revenues and expenditures. There is no impact on the General Fund. (Joel Millman/James Smith)

* P. Discussion/approval/disapproval of an award under the Arizona State Toxicology Lab funding between the Arizona Department of Health Services and the Pinal County Medical Examiner's Office, through Pinal County Board of Supervisors, beginning September 1, 2023, ending August 31, 2024, for $37,676.50. Funding will be used by the Medical Examiner's Office for toxicology testing and improvement of the investigation of drug and overdose deaths. Acceptance requires an amendment to the FY23/24 budget to transfer reserve appropriation from Fund 213 (Grants/Project Contingency) to Fund 266 (MISC Grants) to increase revenues and expenditures. There is no impact on the General Fund. (Andre Davis/John Hu)

* Q. Discussion/approval/disapproval of an agreement between the Pinal County Medical Examiner's Office (PCMEO) and A.T. Still University in which the PCMEO shall provide autopsy clinical/educational experience to A.T. Still medical students. (Andre Davis/John Hu)

* R. Discussion/approval/disapproval of Resolution No. 020724-RD23-110 releasing the current financial assurance Performance Bond No. K4016621A, associated with Borgata Unit 1A and accepting Maintenance Bond No. K4016621AM, located in Section 3 and 10, Township 3 South, Range 7 East. Supervisor District #1. (RD23- 110) (Christopher Wanamaker/Joe Ortiz)

* S. Discussion/approval/disapproval of Resolution No. 020724-RD23-111 releasing the current financial assurance Performance Bond No. TIC03005, associated with Borgata Unit 1B and accepting Maintenance Bond No. TIC03005M, located in Section 3 and 10, Township 3 South, Range 7 East. Supervisor District #1. (RD23- 111) (Christopher Wanamaker/Joe Ortiz)

Item T Pulled from Consent Agenda

* T. Discussion/approval/disapproval of an Intergovernmental Agreement between Pinal County and the Town of Queen Creek for the Design and Construction of Germann Road from Ironwood Road to Kenworthy Road. Supervisor District #2. (GA23-023) (Celeste Garza/Joe Ortiz)

Chairman Goodman spoke regarding the design and construction of Germann Road, growth in the area, and recognized Staff, the Town of Queen Creek, LG and SRP.

Item Action: Approved Consent Agenda Item T as presented

Motion Made By: Supervisor Cavanaugh Seconded By: Supervisor McClure

To approve Consent Agenda Item T as presented.

Motion Passed

Ayes: Cavanaugh, Goodman, McClure, Miller, Serdy (5)

* U. Discussion/approval/disapproval of Resolution No. 020724-GA23-025 approving the Second Amendment to the Development Agreement for Bella Vista Farms. Supervisor District #2. (GA23-025) (Joe Ortiz)

* V. Discussion/approval/disapproval of a Final Plat for Wales Ranches Unit 2-Parcel 2.5B. Supervisor District #2. (FP21-053) (Lindsey Randall/Joe Ortiz)

* W. Discussion/approval/disapproval of Resolution No. 020724-RD23-106 accepting Subdivision Improvement Performance Bond No. PB02497501494, associated with Bella Vista Farms Parcels G&H-Parcel 3, located in Section 9, Township 3 South, Range 8 East. Supervisor District #2. (RD23-106) (Christopher Wanamaker/Joe Ortiz)

* X. Discussion/approval/disapproval of Resolution No. 020724-RD23-107 accepting Subdivision Improvement Performance Bond No. 024273427, associated with Bella Vista Farms Parcels G&H-Parcel 2, located in Section 9, Township 3 South, Range 8 East. Supervisor District #2. (RD23-107) (Christopher Wanamaker/Joe Ortiz)

* Y. Discussion/approval/disapproval of Resolution No. 020724-RD23-108 accepting Subdivision Improvement Performance Bond No. 024273428, associated with Bella Vista Farms Parcels G&H-Parcel 1, located in Section 9, Township 3 South, Range 8 East. Supervisor District #2. (RD23-108) (Christopher Wanamaker/Joe Ortiz)

* Z. Discussion/approval/disapproval of Resolution No. 020724-RD23-109 accepting Subdivision Improvement Performance Bond No. 024273426, associated with Bella Vista Farms Parcels G&H-Parcel 4, located in Section 9, Township 3 South, Range 8 East. Supervisor District #2. (RD23-109) (Christopher Wanamaker/Joe Ortiz)

* AA. Discussion/approval/disapproval of an Information Sharing Access Agreement with the Federal Emergency Management Agency (FEMA) and authorizing the County Manager to execute the agreement. The purpose of this agreement is to govern the collection, access, disclosure, security, and retention of personally identifiable information needed for maintenance of the County's Community Rating System. (GA23-024) (Joshua Plumb/Joe Ortiz)

* AB. Discussion/approval/disapproval of Special Event Permit SEP-002-24: Mountain Bike America, LLC, (Epic Rides) cycling and overnight camping fundraising event to be held on February 16, 2024, through February 18, 2024, at Willow Springs Ranch. Supervisor District #4. (Valerie Lujan/Brent Billingsley)

* AC. Discussion/approval/disapproval to accept an Amendment for Award 15PBJA-23- GG-03071-JAGX under the Edward Byrne Memorial Justice Assistance Program between the Department of Justice and Pinal County through the Pinal County Board of Supervisors beginning October 1, 2023, ending September 30, 2024. This Amendment requires disclosure forms to be signed by the Pinal County Authorized Official. (Kent Volkmer)

Item AD Pulled from Consent Agenda

* AD. Discussion/approval/disapproval of the following appointments and resignations for the precinct committeemen of the Democratic and Republican parties:

Democratic Appointments:
Supervisor District #2:
Precinct #85 Jennifer Guches, 2137 W. Gila Butte Dr., San Tan Valley 85142
Precinct #85 Shannon Guches, 2137 W. Gila Butte Dr., San Tan Valley 85142
Supervisor District #4:
Precinct #97 Robyn Hazeltine, 4069 E. Citrine Rd., San Tan Valley 85143
Democratic Resignations:
Supervisor District #4:
Precinct #27 Caroline E. Gardner, 5824 E. Valley View Dr., Florence 85132
Precinct #93 Alyssa R. Vigil, 401 N. Cody Loop Rd., Oracle 85623
Republican Appointments:
Supervisor District #2:
Precinct #28 Laura Moncrief, 762 E. Laddoos Avenue, San Tan Valley 85144
Precinct #28 Margaret Concannon, 1290 E. Artemis Trail, Queen Creek 85140
Supervisor District #3:
Precinct #21 Stephen (John) Hunt, 9972 W. Ironwood Drive, Casa Grande 85194
Precinct #33 Dale R. Ragland, 1270 E. Sunset Drive, Casa Grande 85122
Precinct #33 Marrell Dean Livesay, 1270 E. Sunset Drive, Casa Grande 85122
Precinct #37 Charles M. Bramhall, 2068 N. Saint Andrews Drive, Casa Grande 85122
Precinct #81 Bonnie D. Stocker, 1832 E. Sandalwood Rd., Casa Grande 85122
Republican Resignations:
Supervisor District #2:
Precinct #28 Susan Cooper, 1462 E. Sweet Citrus Dr., San Tan Valley 85140
Precinct #28 Gary Vain, 1625 E. Hesperus Way, Queen Creek 85140
Precinct #28 Rita Vain, 1625 E. Hesperus Way, Queen Creek 85140
Supervisor District #3:
Precinct #21 Lisle (L.D.) Hawkins, 8466 N. Bel Air Road, Casa Grande 85194 (Dana Lewis)

Supervisor Cavanaugh questioned if the Republican Party is properly constituted.

Discussion held regarding Republican Party authority by the following Board Members and Staff; Chairman Goodman, Vice-Chairman McClure, Supervisor Cavanaugh, and Chris Keller, Chief Civil Deputy County Attorney.

Item Action: Approved Consent Agenda Item AD as presented

Motion Made By: Supervisor Cavanaugh Seconded By: Supervisor McClure

To approve Consent Agenda Item AD as presented.

Motion Passed

Ayes: Cavanaugh, Goodman, McClure, Miller, Serdy (5)

* AE. Discussion/approval/disapproval of Resolution No. 020724-ED-01, a Resolution of the Board of Supervisors correcting Resolution No. 122023-ED-01 to correctly identify the term length for Electrical District #3 Board Members as three years, not two years, as stated in Resolution No. 122023-ED-01. (Dana Lewis)

* AF. Discussion/approval/disapproval of Resolution No. 020724-ED-02, a Resolution of the Board of Supervisors correcting Resolution No. 110123-ED to correctly identify the term length for Maricopa-Stanfield Irrigation and Drainage District Board Members as three years, not two years, as stated in Resolution No. 110123-ED. (Dana Lewis)

Items AG and AH Pulled from Consent Agenda

* AG. Discussion/approval/disapproval of the polling places to be used for the March 19, 2024, Presidential Preference Election. Pinal County has over 200,000 registered voters, the number of polling places for this election is limited to half the number of voting precincts, which results in 52 sites. See A.R.S. 16-248(D). (Dana Lewis)

Items AG and AH, discussion and motion held under Item AH.

* AH. Discussion/approval/disapproval of March 19, 2024, Presidential Preference Election Poll Workers. Pursuant to A.R.S. 16-531, the Board of Supervisors must appoint election boards for each polling location. (Dana Lewis)

Items AG and AH, discussion and motion held under Item AH.

Supervisor Serdy requested an update from Dana Lewis, Recorder regarding polling places and inquired if the Apache Junction shortages have been addressed.

Dana Lewis, Recorder appeared before the Board, explained the statutory requirement of a 50% reduction of polling place locations for the Presidential Preference Election, polling place shortages in Apache Junction were indirect effects to the 2024 Primary and General Elections.

Discussion held regarding poll workers, Presidential Preference Election, and eligible voters by the following Board Members and Staff; Vice-Chairman McClure, Supervisor Miller, Supervisor Serdy, and Dana Lewis.

Item Action: Approved Consent Agenda Items AG and AH

Motion Made By: Supervisor Serdy Seconded By: Supervisor Cavanaugh

To approve Consent Agenda Items AG and AH.
Motion Passed

Ayes: Cavanaugh, Goodman, McClure, Miller, Serdy (5)

Item AI Pulled from Consent Agenda

* AI. Discussion/approval/disapproval of the Pinal County Recorder to establish on-site early voting locations at the 5 offices of the County Recorder located at:

1) 575 N. Idaho Rd. Ste. 800, Apache Junction, AZ
2) 820 E. Cottonwood Ln. Ste. A-2, Casa Grande, AZ
3) 31 N. Pinal St. Bldg. E, Florence, AZ
4) 19955 N. Wilson Ave. Ste. 100, Maricopa, AZ
5) 31505 N. Schnepf Rd. Bldg. A, San Tan Valley, AZ

for the duration of the early voting period for the Presidential Preference Election beginning February 21, 2024, and ending March 15, 2024. (A.R.S. 16-246(C)) (Dana Lewis)

Supervisor Cavanaugh requested Dana Lewis, Recorder provide an explanation regarding voting in the Presidential Preference Election (PPE).

Dana Lewis, Recorder appeared before the Board and presented regarding voting options for the PPE; early voting by mail, in person early voting, emergency voting and Election Day voting. In person early voting is held at the Recorder's Offices, from 8:00 a.m. to 5:00 p.m.

Item Action: Approved Consent Agenda Item AI as presented

Motion Made By: Supervisor Cavanaugh Seconded By: Supervisor McClure

To approve Consent Agenda Item AI as presented.

Motion Passed

Ayes: Cavanaugh, Goodman, McClure, Miller, Serdy (5)

* AJ. Discussion/approval/disapproval of Resolution No. 020724-REC authorizing the Pinal County Recorder to operate emergency voting locations at the 5 offices of the County Recorder located at:

1) 575 N. Idaho Rd. Ste. 800, Apache Junction, AZ
2) 820 E. Cottonwood Ln. Ste. A-2, Casa Grande, AZ
3) 31 N. Pinal St. Bldg. E, Florence, AZ
4) 19955 N. Wilson Ave. Ste. 100, Maricopa, AZ
5) 31505 N. Schnepf Rd. Bldg. A, San Tan Valley, AZ

on Monday, March 18, 2024, for the 2024 Presidential Preference Election. (A.R.S. 16-411) (Dana Lewis)

* AK. Discussion/approval/disapproval of Notification of Intent to Provide Educational Services for an Accommodation District for fiscal year 24/25. (Jill Broussard)

* AL. Discussion/approval/disapproval for Sergeant Phil LeBlanc S5/466 who retired from the Pinal County Sheriff's Office (PCSO) on December 16, 2023. Sergeant LeBlanc S5/466 has requested that, in compliance with established precedence and protocol, he be permitted to purchase his PCSO issued duty weapon(s), identified as Glock 17 at $25 and Sun Devil AR15 at $330. Fair market value for Glock 17 is approximately $420 and Fair market value for the Sun Devil AR15 is $330. Purchase of issued weapon(s) upon retirement is also in compliance with A.R.S. 38-1115A which allows a law enforcement officer upon his/her retirement to purchase his/her issued weapon(s) at a price determined by the administrator of the agency. (Mark Lamb)

* AM. Discussion/approval/disapproval authorizing the Treasurer's Office to sign and submit a petition for remission/mitigation with the Department of Justice regarding an ongoing forfeiture investigation. (Ian Daranyi/Kelli Munroe/Michael McCord)

* AN. Discussion/approval/disapproval to accept the transfer of $265 from Juvenile Court Services fund 60 Cost Center 2614005 to fund 134 Cost Center 2617000 to make the balance of the account $5,400. These funds will be utilized to pay juvenile participants who are accepted into the program and are paid at a rate of $13.85/hour for their community service completed. These funds will be submitted to pay off juveniles' restitution to their victims at a rate of up to $500. There is no impact on the General Fund. (Denise Smith)

* AO. Discussion/approval/disapproval of the non-binding letter of understanding for the Germann Road Alignment and authorization for the County Manager to execute all necessary and related documents. (Chris Keller/Leo Lew)

11:55 a.m. – Chairman Goodman having received a request from Vice-Chairman McClure called Item 20 out of order.

12:10 p.m. – Chairman Goodman having heard Item 20 out of order returned to Item 9.

(9) Meeting of the Pinal County Flood Control District Board of Directors. (Christopher Wanamaker/Joe Ortiz)

Chairman Goodman recessed the Pinal County Board of Supervisors Meeting and convened as the Pinal County Flood Control District Board of Directors Meeting.

Item Action: Convened into the Pinal County Flood Control District Agenda

Chairman Goodman adjourned the Pinal County Flood Control District Board of Directors Meeting.

(10) Meeting of the Pinal County Public Health Services District Board of Directors. (Merissa Mendoza/MaryEllen Sheppard)

Chairman Goodman convened as the Pinal County Public Health Services District Board of Directors Meeting.

Item Action: Convened into the Pinal County Public Health Services District Agenda

Chairman Goodman adjourned the Pinal County Public Health Services District Board of Directors Meeting and reconvened the Pinal County Board of Supervisors Meeting.

(11) **Public Hearing** and discussion/approval/disapproval of Ordinance No. 2024-PZ-046-23, an Ordinance approving case PZ-046-23; Fern Vasi, owner, Jessica Sarkissian – Upfront Planning and Entitlements LLC, agent/applicant, requesting an approval of a rezone of 2.65± acres from GR (General Rural Zone) to C-3 (General Commercial Zoning District), to allow development of a commercial complex; situated in Section 20, T02S, R08E Gila and Salt River Base and Meridian; Tax parcels 104-22-041A and 104-22-041B (legal on file), located on the southwest corner of Ocotillo Rd and Kenworthy Rd in San Tan Valley, in Pinal County. This item requires a super-majority vote of the Board. Supervisor District #2. (Patrick Roberts/Brent Billingsley)

Patrick Roberts, Planner appeared before the Board and presented on Items 11 and 12.

Jessica Sarkissian, Upfront Planning and Entitlements, LLC, appeared before the Board and presented.

Mike Aquisto, Owner of Extra Innings, appeared before the Board and presented regarding the batting cage project and willingness to restrict building height to twenty (20) feet to demonstrate neighborliness.

Chairman Goodman opened the Collective Public Hearing for Items 11 and 12, and asked if members of the public are present in the audience who wish to address the Board to come forward at this time.

The following members of the public appeared before the Board and spoke:

- In opposition; Kimberley Barnby, San Tan Valley; Ervin Sloboda, San Tan Valley; Andrew Sole, San Tan Valley; and Michael Summer, San Tan Valley.

Chairman Goodman closed the Public Hearing.

Discussion held regarding this project and roadway improvements; traffic impacts, mitigation, concerns, parking, signage, and youth amenities by the following Board Members, Staff, and Applicant Representative; Chairman Goodman, Supervisor Cavanaugh, Supervisor Miller, Chris Keller, Chief Civil Deputy County Attorney, Christopher Wanamaker, County Engineer, and Jessica Sarkissian.

Item Action: Approved as presented with one (1) Stipulation

Motion Made By: Supervisor Miller Seconded By: Supervisor Serdy

To approve of Ordinance No. 2024-PZ-046-23, an Ordinance approving case PZ-046-23; Fern Vasi, owner, Jessica Sarkissian – Upfront Planning and Entitlements LLC, agent/applicant, requesting an approval of a rezone of 2.65± acres from GR (General Rural Zone) to C-3 (General Commercial Zoning District), to allow development of a commercial complex; situated in Section 20, T02S, R08E Gila and Salt River Base and Meridian; Tax parcels 104-22-041A and 104-22-041B (legal on file), located on the southwest corner of Ocotillo Rd and Kenworthy Rd in San Tan Valley, in Pinal County. This item requires a super-majority vote of the Board.

Motion Passed by Roll Call

Ayes: Cavanaugh, Miller, Serdy, McClure, Goodman (5)

(12) **Public Hearing** and discussion/approval/disapproval of Ordinance No. 2024-PZ-PD-001-23, an Ordinance approving case PZ-PD-001-23; Fern Vasi, owner, Jessica Sarkissian – Upfront Planning and Entitlements LLC, agent/applicant, requesting approval of a Planned Area Development (PAD) Overlay District, to apply C-3 PAD development standards on 2.65± acres, situated in the Northern quarter of Section 20, T02S, R08E Gila and Salt River Base and Meridian; tax parcels 104-22- 041A and 104-22-041B (legal on file), located on the southwest corner of Ocotillo Rd and Kenworthy Rd in San Tan Valley, in Pinal County. This item requires a super-majority vote of the Board. Supervisor District #2. (Patrick Roberts/Brent Billingsley)

Discussion and Public Hearing held under Item 11.

Item Action: Approved as presented with eleven (11) Stipulations

Motion Made By: Supervisor Miller Seconded By: Supervisor McClure

To approve Ordinance No. 2024-PZ-PD-001-23, an Ordinance approving case PZ-PD-001-23; Fern Vasi, owner, Jessica Sarkissian – Upfront Planning and Entitlements LLC, agent/applicant, requesting approval of a Planned Area Development (PAD) Overlay District, to apply C-3 PAD development standards on 2.65± acres, situated in the Northern quarter of Section 20, T02S, R08E Gila and Salt River Base and Meridian; tax parcels 104-22- 041A and 104-22-041B (legal on file), located on the southwest corner of Ocotillo Rd and Kenworthy Rd in San Tan Valley, in Pinal County. This item requires a super-majority vote of the Board.

Motion Passed by Roll Call

Ayes: Cavanaugh, Miller, Serdy, McClure, Goodman (5)

1:10 p.m. – Chairman Goodman announced the Board shall take a brief recess.

1:42 p.m. – Chairman Goodman reconvened the Pinal County Board of Supervisors Meeting.

(13) **Public Hearing** and discussion/approval/disapproval of Ordinance No. 2024-PZ-042-23, an Ordinance approving case PZ-042-23; RRV South LP, Robert Bambauer, owner/applicant, Brian Underwood, The Planning Center, agent requesting an approval of a rezone of 224± acres from CR-3 PAD (Single Residence Zone), 262± acres of CR-4 PAD (Multiple Residence Zone), (Case PZ-015-08, PZ-PD-015-08) to 294± acres R-7 PAD (Single Residence Zoning District), 192± acres R-9 PAD (Single Residence Zoning District); situated in portion of Sections 5, 8, 9 T10S, R10E G&SRB&M; Tax parcels 410-10-001C, 410-10-003V, 410-11-004B, 410-11-004C, 410-11-009D, 410-12-001J, (legal on file), located at the Red Rock interchange on I-10, in Pinal County. The Planning Commission recommended approval unanimously (7-0) of case PZ-042-23 with one (1) stipulation. Supervisor District #4. (Sangeeta Deokar/Brent Billingsley)

Sangeeta Deokar, Senior Planner appeared before the Board and presented on Items 13 and 14.

Brian Underwood, Planning Center, Tucson appeared before the Board, presented, and thanked Sangeeta Deokar.

Chairman Goodman opened the Collective Public Hearing for Items 13 and 14, and asked if members of the public are present in the audience who wish to address the Board to come forward at this time, there being none, Chairman closed the Public Hearing.

Item Action: Approved as presented with one (1) Stipulation

Motion Made By: Supervisor McClure Seconded By: Supervisor Miller

To approve Ordinance No. 2024-PZ-042-23, an Ordinance approving case PZ-042-23; RRV South LP, Robert Bambauer, owner/applicant, Brian Underwood, The Planning Center, agent requesting an approval of a rezone of 224± acres from CR-3 PAD (Single Residence Zone), 262± acres of CR-4 PAD (Multiple Residence Zone), (Case PZ-015-08, PZ-PD-015-08) to 294± acres R-7 PAD (Single Residence Zoning District), 192± acres R-9 PAD (Single Residence Zoning District); situated in portion of Sections 5, 8, 9 T10S, R10E G&SRB&M; Tax parcels 410-10-001C, 410-10-003V, 410-11-004B, 410-11-004C, 410-11-009D, 410-12-001J, (legal on file), located at the Red Rock interchange on I-10, in Pinal County. The Planning Commission recommended approval unanimously (7-0) of case PZ-042-23 with one (1) stipulation.

Motion Passed

Ayes: Cavanaugh, Goodman, McClure, Miller, Serdy (5)

(14) **Public Hearing** and discussion/approval/disapproval of Ordinance No. 2024-PZ-PD-016-23, an Ordinance approving case PZ-PD-016-23; RRV South LP, Robert Bambauer, owner/applicant, Brian Underwood, The Planning Center, agent requesting approval of a 977± acre amendment to Red Rock Village (PAD) Overlay Zoning District (Case PZ-PD-015-08) consistent with case PZ- 042-23 (rezone of 486± acres of 977± acres); situated in portion of Sections 5, 8, 9 T10S, R10E G&SRB&M; (legal on file), Tax parcels 410-10-001C, 410-10-003V, 410-11-004B, 410-11-004C, 410-11-009D, 410-12-001J, (legal on file), located at the Red Rock interchange on I-10, in Pinal County. The Planning Commission recommended approval unanimously (7-0) of case PZ-PD-016- 23 with sixteen (16) stipulations. Supervisor District #4. (Sangeeta Deokar/Brent Billingsley)

Discussion and Public Hearing held under Item 13.

Item Action: Approved as presented with sixteen (16) Stipulations

Motion Made By: Supervisor McClure Seconded By: Supervisor Cavanaugh

To approve Ordinance No. 2024-PZ-PD-016-23, an Ordinance approving case PZ-PD-016-23; RRV South LP, Robert Bambauer, owner/applicant, Brian Underwood, The Planning Center, agent requesting approval of a 977± acre amendment to Red Rock Village (PAD) Overlay Zoning District (Case PZ-PD-015-08) consistent with case PZ- 042-23 (rezone of 486± acres of 977± acres); situated in portion of Sections 5, 8, 9 T10S, R10E G&SRB&M; (legal on file), Tax parcels 410-10-001C, 410-10-003V, 410-11-004B, 410-11-004C, 410-11-009D, 410-12-001J, (legal on file), located at the Red Rock interchange on I-10, in Pinal County. The Planning Commission recommended approval unanimously (7-0) of case PZ-PD-016- 23 with sixteen (16) stipulations.

Motion Passed

Ayes: Cavanaugh, Goodman, McClure, Miller, Serdy (5)

(15) **Public Hearing** and discussion/approval/disapproval of Resolution No. 2024-PZ-PA-001-23, an Resolution approving case PZ-PA-001-23; Robin Smith, Robert and Joan Rothberg, owners, Brian Underwood, The Planning Center, agent/applicant requesting a Non-Major Comprehensive Plan Amendment to designate 60± acres from Moderate Low density Residential (MLDR) to Medium Density Residential (MDR), situated in portion of Sections 9, T10S, R10E G&SRB&M; Tax parcel 410-12-001D (legal on file), located three-quarters of a mile south of the intersection of Sasco Road and Aguirre Lane in Red Rock area, in Pinal County. The Planning Commission recommended approval unanimously (7-0) of case PZ-PA-001-23 with no stipulations. Supervisor District #4. (Sangeeta Deokar/Brent Billingsley)

Chairman Goodman announced Items 15, 16, and 17 will be discussed together.

Sangeeta Deokar, Senior Planner appeared before the Board and presented.

Brian Underwood, Planning Center, Tucson appeared before the Board, presented, and thanked Sangeeta Deokar.

Chairman Goodman opened the Collective Public Hearing for Items 15, 16, and 17, and asked if members of the public are present in the audience who wish to address the Board to come forward at this time, there being none, Chairman closed the Public Hearing.

Item Action: Approved as presented with no Stipulations

Motion Made By: Supervisor McClure Seconded By: Supervisor Cavanaugh

To approve Resolution No. 2024-PZ-PA-001-23, an Resolution approving case PZ-PA-001-23; Robin Smith, Robert and Joan Rothberg, owners, Brian Underwood, The Planning Center, agent/applicant requesting a Non-Major Comprehensive Plan Amendment to designate 60± acres from Moderate Low density Residential (MLDR) to Medium Density Residential (MDR), situated in portion of Sections 9, T10S, R10E G&SRB&M; Tax parcel 410-12-001D (legal on file), located three-quarters of a mile south of the intersection of Sasco Road and Aguirre Lane in Red Rock area, in Pinal County. The Planning Commission recommended approval unanimously (7-0) of case PZ-PA-001-23 with no stipulations.

Motion Passed

Ayes: Cavanaugh, Goodman, McClure, Miller, Serdy (5)

(16) **Public Hearing** and discussion/approval/disapproval of Ordinance No. 2024-PZ-037-23, an Ordinance approving case PZ-037-23; Robin Smith, Robert and Joan Rothberg, owners, Brian Underwood, The Planning Center, agent/applicant requesting an approval of a rezone of 60± acres from GR (General Rural Zone) to R-7 (Single Residence Zoning District), to allow for 294 single family dwelling units; situated in portion of Sections 9, T10S, R10E G&SRB&M; Tax parcel 410- 12-001D (legal on file), located three-quarters of a mile south of the intersection of Sasco Road and Aguirre Lane in Red Rock area, in Pinal County. The Planning Commission recommended approval unanimously (7-0) of case PZ-037-23 with one (1) stipulation. Supervisor District #4. (Sangeeta Deokar/Brent Billingsley)

Discussion and Public Hearing held under Item 15.

Item Action: Approved as presented with one (1) Stipulation

Motion Made By: Supervisor McClure Seconded By: Supervisor Cavanaugh

To approve Ordinance No. 2024-PZ-037-23, an Ordinance approving case PZ-037-23; Robin Smith, Robert and Joan Rothberg, owners, Brian Underwood, The Planning Center, agent/applicant requesting an approval of a rezone of 60± acres from GR (General Rural Zone) to R-7 (Single Residence Zoning District), to allow for 294 single family dwelling units; situated in portion of Sections 9, T10S, R10E G&SRB&M; Tax parcel 410- 12-001D (legal on file), located three-quarters of a mile south of the intersection of Sasco Road and Aguirre Lane in Red Rock area, in Pinal County. The Planning Commission recommended approval unanimously (7-0) of case PZ-037-23 with one (1) stipulation.

Motion Passed

Ayes: Cavanaugh, Goodman, McClure, Miller, Serdy (5)

(17) **Public Hearing** and discussion/approval/disapproval of Ordinance No. 2024-PZ-PD-009-23, an Ordinance approving case PZ-PD-009-23; Robin Smith, Robert and Joan Rothberg, owners, Brian Underwood, The Planning Center, agent/applicant requesting approval of Smith-Rothberg (PAD) Overlay Zoning District of 60± acres to allow for 294 single family dwelling units; situated in portion of Sections 9, T10S, R10E G&SRB&M; (legal on file), Tax parcels 410-12-001D (legal on file), located three-quarters of a mile south of the intersection of Sasco Road and Aguirre Lane in Red Rock area, in Pinal County. The Planning Commission recommended approval unanimously (7-0) of case PZ-PD-009-23 with seventeen (17) stipulations. Supervisor District #4. (Sangeeta Deokar/Brent Billingsley)

Discussion and Public Hearing held under Item 15.

Item Action: Approved as presented with seventeen (17) Stipulations

Motion Made By: Supervisor McClure Seconded By: Supervisor Cavanaugh

To approve Ordinance No. 2024-PZ-PD-009-23, an Ordinance approving case PZ-PD-009-23; Robin Smith, Robert and Joan Rothberg, owners, Brian Underwood, The Planning Center, agent/applicant requesting approval of Smith-Rothberg (PAD) Overlay Zoning District of 60± acres to allow for 294 single family dwelling units; situated in portion of Sections 9, T10S, R10E G&SRB&M; (legal on file), Tax parcels 410-12-001D (legal on file), located three-quarters of a mile south of the intersection of Sasco Road and Aguirre Lane in Red Rock area, in Pinal County. The Planning Commission recommended approval unanimously (7-0) of case PZ-PD-009-23 with seventeen (17) stipulations.

Motion Passed

Ayes: Cavanaugh, Goodman, McClure, Miller, Serdy (5)

10:29 a.m. – Chairman Goodman having received a request from Vice-Chairman McClure called Item 18 out of order.

(18) Discussion/approval/disapproval of a donation to the Mary C. O'Brien Accommodation School District of one desk and one credenza for use in the Business Office (BATTS) located at the Villa Oasis High School in Toltec. This is surplus furniture from our Information Technology Department, for a total value of $1. This item requires unanimous consent of the Board. (Angeline Woods)

Angeline Woods, Office of Budget and Finance Director appeared before the Board and presented.

Item Action: Approved

Motion Made By: Supervisor Cavanaugh Seconded By: Supervisor Miller

To approve a donation to the Mary C. O'Brien Accommodation School District of one desk and one credenza for use in the Business Office (BATTS) located at the Villa Oasis High School in Toltec. This is surplus furniture from our Information Technology Department, for a total value of $1. This item requires unanimous consent of the Board.

Motion Passed

Ayes: Cavanaugh, Goodman, McClure, Miller, Serdy (5)

10:30 a.m. – Chairman Goodman having heard Items 18 and 19 out of order returned to Item 2 on the agenda.

9:47 a.m. – Chairman Goodman called Item 19 out of order.

Vice-Chairman McClure requested to call Item 18 out of order, following Item 19.

(19) Discussion/approval/disapproval of renewal, revisions or termination of the Memorandum of Understanding (MOU) executed September 6, 2023, between Pinal County Board of Supervisors and the Pinal County Recorder for election services. Pursuant to the current MOU section 2.0, "The parties agree to review this MOU at the BOARD'S first regularly scheduled meeting in February 2024, and then the Parties will review this MOU annually at the BOARD's first regularly scheduled meeting in February for as long as the Parties are operating under this MOU. The BOARD shall take action to renew, revise, or terminate this MOU at least yearly at its first regularly scheduled meeting in February when this MOU is being considered for renewal, revision, or termination." (Chris Keller/Dana Lewis)

Chairman Goodman requested a motion to Convene into Executive Session for legal advice.

Motion Made By: Supervisor Miller Seconded By: Supervisor McClure

To convene into Executive Session.

Motion Passed

Ayes: Cavanaugh, Goodman, McClure, Miller (4)

Nays: Serdy (1)

10:14 a.m. – Chairman Goodman recessed Executive Session and returned to Item 1 to provide direction to Staff.

10:17 a.m. – Chairman Goodman returned to Item 19.

Chris Keller, Chief Civil Deputy County Attorney, introduced the item.

Dana Lewis, Recorder appeared before the Board and presented.

Discussion held regarding termination of employees in the Election's Department and how to proceed by the following Board Members; Chairman Goodman, Supervisor Cavanaugh, and Supervisor Serdy.

Item Action: Approved the MOU as written and renew for another year

Main Motion Made By: Supervisor Miller Seconded By: Supervisor McClure

To approve the MOU as written and renew for another year.

Main Motion Passed

Ayes: Goodman, McClure, Miller, Serdy (4)

Nays: Cavanaugh (1)

For the Record, Supervisor Cavanaugh explained his vote in opposition.

For a transcription of the explanations of said vote please visit:
https://pinalcountyaz.new.swagit.com/videos/296782

10:29 a.m. – Chairman Goodman having received a request from Vice-Chairman McClure called Item 18 out of order.

11:55 a.m. – Chairman Goodman called Item 20 out of order.

(20) Discussion/approval/disapproval of the acceptance of the resignation of Western Pinal Justice Court JP Lyle Riggs, effective February 2, 2024, and discussion of process of filling the vacancy pursuant to A.R.S. 16-230. (Chris Keller/Kent Volkmer)

Chris Keller, Chief Civil Deputy County Attorney introduced the item.

Discussion held regarding acceptance of resignation and how to proceed by the following Board Members and Staff; Chairman Goodman, Vice-Chairman McClure, Supervisor Cavanaugh, Supervisor Miller, Chris Keller, and Natasha Kennedy, Clerk of the Board.

Item Action: Approved Item 20, of the acceptance of the resignation of Western Pinal Justice Court, the Honorable JP Lyle Riggs, effective February 2, 2024, and to fill the vacancy according to A.R.S. 16-230, as well as opening and advertising the position as follows:

- **Opening the position for applicants between February 8, 2024, through Friday, March 8, 2024, interviews will be conducted by a committee of two, consisting of Supervisor Miller and Supervisor Cavanaugh. Closing the advertisement on March 8, 2024.**
- **Between March 8, 2024, and March 19, 2024, the committee will interview, deliberate, and deliver a recommendation to the Board at the March 20, 2024, Board Meeting.**

Lastly, to honor Judge Lyle Riggs, who has honorably served in this position, has corrected problems within the court, and has served his community honorably and with distinction.

Motion Made By: Supervisor Cavanaugh

To approve Item 20 of the acceptance of the resignation of Western Pinal Justice Court, the Honorable JP Lyle Riggs, effective February 2, 2024, and to fill the vacancy according to A.R.S. 16-230, as well as opening and advertising the position. Opening the position for applicants between February 8, 2024, through Friday, March 8, 2024, interviews will be conducted by a committee of two, consisting of Supervisor Miller and Supervisor Cavanaugh.

Further discussion held regarding filling the vacancy; advertisement and interview process by the following Board Members and Staff; Chairman Goodman, Vice-Chairman McClure, Supervisor Cavanaugh, Supervisor Miller, and Chris Keller.

Friendly Amendment Offered By: Supervisor Cavanaugh, to close the advertisement on March 8, 2024. Between March 8, 2024, and March 19, 2024, the committee will interview, deliberate, and deliver a recommendation to the Board at the March 20, 2024, Board Meeting. Lastly, to honor Judge Lyle Riggs, who has honorably served in this position, has corrected problems within the court, and has served his community honorably and with distinction.

Seconded By: Supervisor Miller

To approve Item 20, of the acceptance of the resignation of Western Pinal Justice Court, the Honorable JP Lyle Riggs, effective February 2, 2024, and to fill the vacancy according to A.R.S. 16-230, as well as opening and advertising the position as follows:

- Opening the position for applicants between February 8, 2024, through Friday, March 8, 2024, interviews will be conducted by a committee of two, consisting of Supervisor Miller and Supervisor Cavanaugh. Closing the advertisement on March 8, 2024.
- Between March 8, 2024, and March 19, 2024, the committee will interview, deliberate, and deliver a recommendation to the Board at the March 20, 2024, Board Meeting.

Lastly, to honor Judge Lyle Riggs, who has honorably served in this position, has corrected problems within the court, and has served his community honorably and with distinction.

Motion Passed

Ayes: Cavanaugh, Goodman, McClure, Miller, Serdy (5)

Chairman Goodman directed Staff to coordinate a ceremony to honor Judge Lyle Riggs on March 20, 2024.

12:10 p.m. – Chairman Goodman having heard Item 20 out of order returned to Item 9.

(21) Discussion of Board Members' request for future agenda item(s) and/or reports to be presented at upcoming meetings. (Mike Goodman)

Supervisor Miller requested a Work Session with a detailed map of locations showing Board approved solar projects located in both incorporated and unincorporated Pinal County, with a project status on those having broken ground.

Supervisor Cavanaugh requested a Report on the appropriate standards for cameras in the Elections Department, to be agendized separate from the election update item, and an Action Item to discuss the Election's Department retention of video recordings of all election-related activities.

Discussion held regarding clarification of Board Member requested items and/or reports by the following Board Members and Staff; Chairman Goodman, Supervisor Cavanaugh, Supervisor Miller, Leo Lew, County Manager, and Chris Keller, Chief Civil Deputy County Attorney.

Item Action: Information Only

(22) Executive Session pursuant to A.R.S. 38-431.03(A)(3)(4)(7) for legal advice and discussion regarding the purchase and/or litigation to acquire property. (Chris Keller/James Petty)

Chairman Goodman reconvened Executive Session.

2:37 p.m. – Supervisor Miller, Supervisor Serdy, and Leo Lew, County Manager did not return to the dais following Executive Session.

Item Action: Adjourned Executive Session

Motion Made By: Supervisor Cavanaugh Seconded By: Supervisor McClure

To adjourn Executive Session.

Motion Passed

Ayes: Cavanaugh, Goodman, McClure (3)

Absent: Miller, Serdy (2)

2:37 p.m. – Chairman Goodman adjourned the February 7, 2024, Regular Meeting of the Board of Supervisors.

PINAL COUNTY BOARD OF SUPERVISORS

_____

Mike Goodman, Chairman

ATTEST:

_____

Natasha Kennedy, Clerk of the Board

Minutes Prepared By: Kelsey Pickard, Deputy Clerk of the Board

Approval of Minutes: March 6, 2024

PINAL COUNTY
WIDE OPEN OPPORTUNITY

AGENDA ITEM

March 6, 2024 ADMINISTRATION BUILDING A
FLORENCE, ARIZONA

REQUESTED BY:

Funds #:

Dept. #:

Dept. Name: Clerk of the Board

Director: Natasha Kennedy

BRIEF DESCRIPTION OF AGENDA ITEM AND REQUESTED BOARD ACTION:

Discussion/approval/disapproval of the current billings before the Board. (Natasha Kennedy)

BRIEF DESCRIPTION OF THE FISCAL CONSIDERATIONS AND/OR EXPECTED FISCAL IMPACT OF THIS AGENDA ITEM:

BRIEF DESCRIPTION OF THE EXPECTED PERFORMANCE IMPACT OF THIS AGENDA ITEM:

MOTION:

Approve as presented.

History

Time	Who	Approval

ATTACHMENTS:

Click to download

Check Register 02.12.24 - 02.15.24

Housing Authority of Pinal County

Check Register

1

Pinal County Division of Housing

Bank Account: 1 01 1111.12 0 - CONVENTIONAL

All Check Numbers

Check Dates from 2/12/2024

Check Number	Check Type	Check Amount	Status	Check Date	Vendor Name
00026795	Check	$202.94	Open	02/12/2024	ARIZONA PUBLIC SERVICE
00026796	Check	$1,242.00	Open	02/12/2024	AZ BEST CHOICE PEST & TERMITE
00026797	Check	$85.91	Open	02/12/2024	AZ WATER CO
00026798	Check	$924.62	Open	02/12/2024	CITY OF ELOY
00026799	Check	$84,682.00	Open	02/12/2024	HARRG, INC
00026800	Check	$114.80	Open	02/12/2024	MARICOPA DOMESTIC WATER IMPROV
00026801	Check	$83.45	Open	02/12/2024	NCHM
00026802	Check	$93.79	Open	02/12/2024	REPUBLIC SERVICES #753
00026803	Check	$216.42	Open	02/12/2024	SRP

Total # of checks listed: 9

Total amount of all checks: $87,645.93

Total Open: 9

Total Cleared: 0

Total Reconciled: 0

Total Void: 0

Housing Authority of Pinal County

Check Register

7

Pinal County Housing - PORT-INS

Bank Account: 7 01 1111.12 0 - VOUCHER

All Check Numbers

Check Dates from 2/12/2024

Check Number	Check Type	Check Amount	Status	Check Date	Vendor Name
00064646	Check	$160.00	Open	02/12/2024	ARIZONA PUBLIC SERVICE
00064647	Check	$1,134.00	Open	02/12/2024	BELLA VISTA
00064648	Check	$963.00	Open	02/12/2024	CENTER PARK APTS
00064649	Check	$48.00	Open	02/12/2024	HEARNS KERRIN O
00064650	Check	$41.55	Open	02/12/2024	NCHM
00064651	Check	$86.00	Open	02/12/2024	SOTO HAYDEE
00064652	Check	$54.00	Open	02/12/2024	Sanford Garrisha T

Total # of checks listed: 7

Total amount of all checks: $2,486.55

Total Open: 7

Total Cleared: 0

Total Reconciled: 0

Total Void: 0

Housing Authority of Pinal County

Check Register

1

Pinal County Division of Housing

Bank Account: 1 01 1111.12 0 - CONVENTIONAL

All Check Numbers

Check Dates from 2/15/2024

Check Number	Check Type	Check Amount	Status	Check Date	Vendor Name
00026804	Check	$432.48	Open	02/15/2024	AJSD
00026805	Check	$34.99	Open	02/15/2024	Apache Junction Water District-Dept.
00026806	Check	$7,386.64	Open	02/15/2024	BANK OF AMERICA
00026807	Check	$330.81	Open	02/15/2024	CITY OF COOLIDGE
00026808	Check	$4,673.20	Open	02/15/2024	HAYNIE & COMPANY
00026809	Check	$57.40	Open	02/15/2024	MARICOPA DOMESTIC WATER IMPROV
00026810	Check	$64.09	Open	02/15/2024	PREMIER DOCUMENT SHREDDING,INC
00026811	Check	$72.34	Open	02/15/2024	REPUBLIC SERVICES #753
00026812	Check	$534.35	Open	02/15/2024	Waste Connections of Arizona,Inc
00026813	Check	$551.00	Open	02/15/2024	Arizona City Sanitation Service
00026814	Check	$286.49	Open	02/15/2024	VERIZON WIRELESS

Total # of checks listed: 11 Total amount of all checks: $14,423.79

Total Open: 11

Total Cleared: 0

Total Reconciled: 0

Total Void: 0

Housing Authority of Pinal County

Check Register

7

Pinal County Housing - PORT-INS

Bank Account: 7 01 1111.12 0 - VOUCHER

All Check Numbers

Check Dates from 2/15/2024

Check Number	Check Type	Check Amount	Status	Check Date	Vendor Name
00064653	ACH	$1,810.00	Open	02/15/2024	FOOTHILLS INVESTMENTS LLC
00064654	ACH	$1,417.00	Open	02/15/2024	MANEK, POONAM
00064655	Check	$92.00	Open	02/15/2024	ARIZONA PUBLIC SERVICE
00064656	Check	$1,623.00	Open	02/15/2024	BACA LLC DBA MOXIE REAL ESTATE
00064657	Check	$527.72	Open	02/15/2024	BANK OF AMERICA
00064658	Check	$3,455.36	Open	02/15/2024	CITY OF TUCSON HOUSING AUTHORI
00064659	Check	$2,326.80	Open	02/15/2024	HAYNIE & COMPANY
00064660	Check	$234.00	Open	02/15/2024	MEDLOCK SANDRIKA L
00064661	Check	$31.91	Open	02/15/2024	PREMIER DOCUMENT SHREDDING,INC
00064662	Check	$19.54	Open	02/15/2024	SAN JOAQUIN HOUSING AUTHORITY
00064663	Check	$222.00	Open	02/15/2024	Session Hazel M
00064664	Check	$42.92	Open	02/15/2024	VERIZON WIRELESS

Total # of checks listed: 12

Total amount of all checks: $11,802.25

Total Open: 12

Total Cleared: 0

Total Reconciled: 0

Total Void: 0

PINAL COUNTY
WIDE OPEN OPPORTUNITY

AGENDA ITEM

March 6, 2024 ADMINISTRATION BUILDING A
FLORENCE, ARIZONA

REQUESTED BY:

Funds #:

Dept. #:

Dept. Name: Clerk of the Board

Director: Natasha Kennedy

BRIEF DESCRIPTION OF AGENDA ITEM AND REQUESTED BOARD ACTION:

Discussion/approval/disapproval of the recommendation to the Arizona Department of Liquor License and Control of application, series 007 Beer and Wine Bar, of Jared Michael Repinski for Ghett Yo Wings located at 40975 N. Ironwood Drive #B104, San Tan Valley, AZ 85140, and authorize the Clerk of the Board to execute and submit all necessary documents to the State. Supervisor District #2. (Natasha Kennedy)

BRIEF DESCRIPTION OF THE FISCAL CONSIDERATIONS AND/OR EXPECTED FISCAL IMPACT OF THIS AGENDA ITEM:

BRIEF DESCRIPTION OF THE EXPECTED PERFORMANCE IMPACT OF THIS AGENDA ITEM:

MOTION:

Approve as presented upon confirmation of no concerns.

History

Time	Who	Approval

ATTACHMENTS:

Click to download
Application
Notice of Posting
Posting Photos
Affidavit of Posting
Local Governing Body Recommendation

State of Arizona
Department of Liquor Licenses and Control

Created 02/02/2024 @ 11:32:57 AM

Local Governing Body Report

LICENSE

Number:		Type:	007 BEER AND WINE BAR
Name:	GHETT YO WINGS		
State:	Pending		
Issue Date:		Expiration Date:	
Original Issue Date:			
Location:	40975 N IRONWOOD DRIVE #B104 SAN TAN VALLEY, AZ 85140 USA		
Mailing Address:	PO BOX 6252 CHANDLER, AZ 85246 USA		
Phone:	(480)916-9464		
Alt. Phone:	(480)664-0389		
Email:	JREPINSKI22@YAHOO.COM		

AGENT

Name:	JARED MICHAEL REPINSKI
Gender:	Male
Correspondence Address:	PO BOX 6252 CHANDLER, AZ 85246 USA
Phone:	(480)664-0389
Alt. Phone:	
Email:	JREPINSKI22@YAHOO.COM

OWNER

Name:	GYW OCOTILLO LLC		
Contact Name:	JARED MICHAEL REPINSKI		
Type:	LIMITED LIABILITY COMPANY		
AZ CC File Number:	23490099	State of Incorporation:	AZ
Incorporation Date:	02/22/2023		
Correspondence Address:	PO BOX 6252 CHANDLER, AZ 85246 USA		
Phone:	(480)664-0389		
Alt. Phone:			
Email:	JREPINSKI22@YAHOO.COM		

Officers / Stockholders

Name:	Title:	% Interest:
B SQUARED CONCEPTS INC	Member	90.00
KYLE DELLY	Member	10.00

B SQUARED CONCEPTS INC - President/ CEO

Name: ABDUL WALLY ANSARI
Gender: Male
Correspondence Address: PO BOX 6252
CHANDLER, AZ 85246
USA
Phone: (480)283-3146
Alt. Phone:
Email: WALLY@GETTYO.COM

GYW OCOTILLO LLC - Member

Name: KYLE DELLY
Gender: Male
Correspondence Address: PO BOX 6252
CHANDLER, AZ 85246
USA
Phone: (480)532-4799
Alt. Phone:
Email: KYLE.DELLY@YAHOO.COM

GYW OCOTILLO LLC - Member

Name: B SQUARED CONCEPTS INC
Contact Name: JARED MICHAEL REPINSKI
Type: CORPORATION
AZ CC File Number: State of Incorporation:
Incorporation Date:
Correspondence Address: 1727 N ARIZONA AVENUE
STE 10
CHANDLER, AZ 85225
USA
Phone: (480)664-0389
Alt. Phone:
Email: JREPINSKI22@YAHOO.COM

MANAGERS

Name: ABDUL WALLY ANSARI
Gender: Male
Correspondence Address: PO BOX 6252
CHANDLER, AZ 85246
USA
Phone: (480)283-3146
Alt. Phone:
Email: WALLY@GETTYO.COM

APPLICATION INFORMATION

Application Number: 277955
Application Type: New Application
Created Date: 01/12/2024

QUESTIONS & ANSWERS

007 Beer and Wine Bar

1) Are you applying for an Interim Permit (INP)?
   No
2) Provide name, address, and distance of nearest school.
   (If less than one (1) mile note footage)
   HAPPY VALLEY EAST CHARTER SCHOOL 266 E WESTBROOKE RD SAN TAN VALLEY AZ 85140
   2650 FEET
3) Are you one of the following? Please indicate below.
   Property Tenant
   Subtenant
   Property Owner
   Property Purchaser
   Property Management Company
   TENANT
4) Is there a penalty if lease is not fulfilled?
   Yes
   What is the penalty?
   LENGTH OF THE LEASE
5) Is the Business located within the incorporated limits of the city or town of which it is located?
   No
   If no, in what City, Town, County or Tribal/Indian Community is this business located?
   PINAL COUNTY
6) What is the total money borrowed for the business not including the lease?
   Please list each amount owed to lenders/individuals.
   $12,750.00

   KYLE DELLY 10030 E KAREN DR SCOTTSDALE AZ 85260
7) Are there walk-up or drive-through windows on the premises?
   No
8) Does the establishment have a patio?
   No
9) Is your licensed premises now closed due to construction, renovation or redesign or rebuild?
   No

'24 JAN 12 PM 1:49 AZDLLC

GYW Ocotillo LLC
Ownership Flow Chart

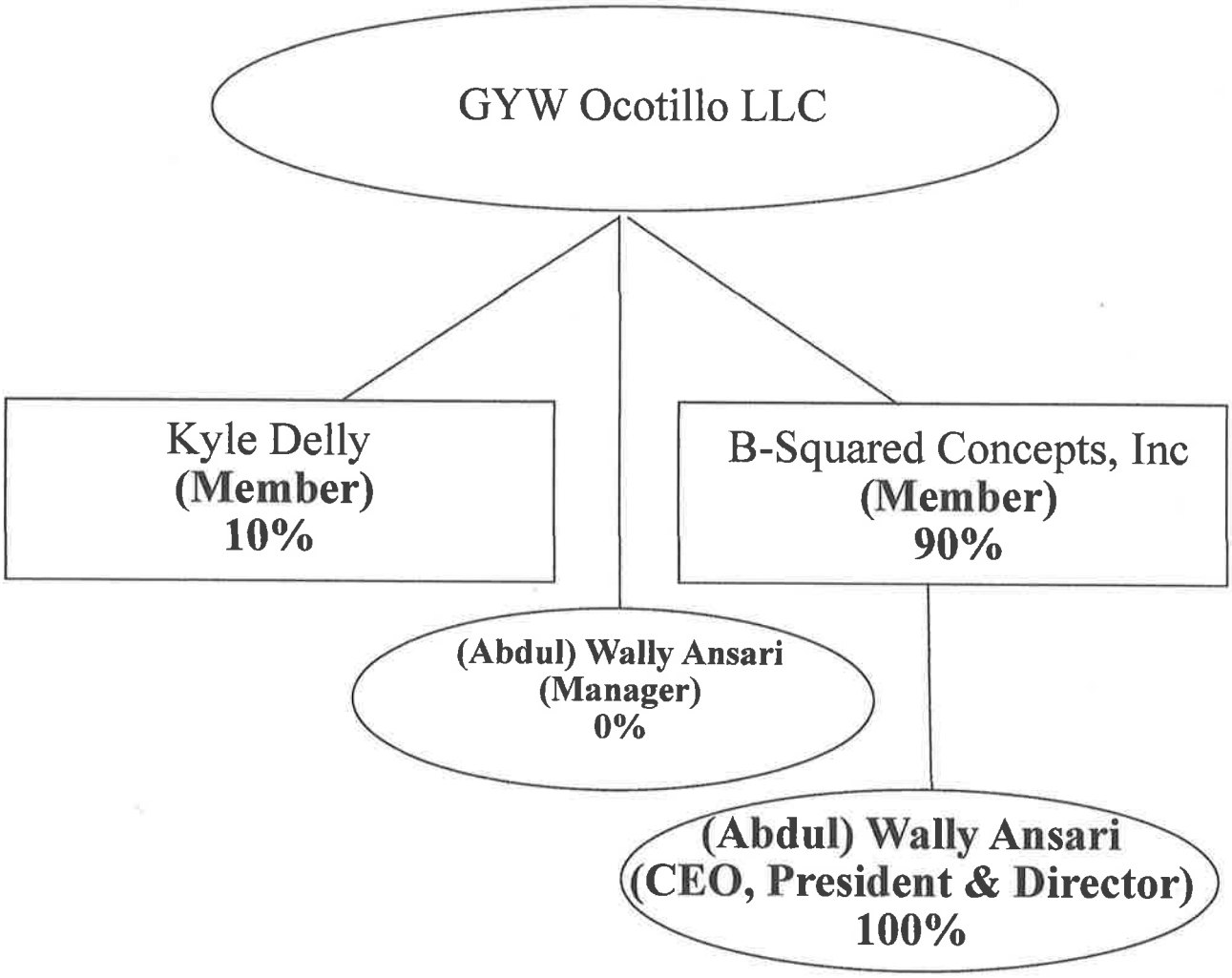

'24 JAN 12 PM 1:49 AZDLLC

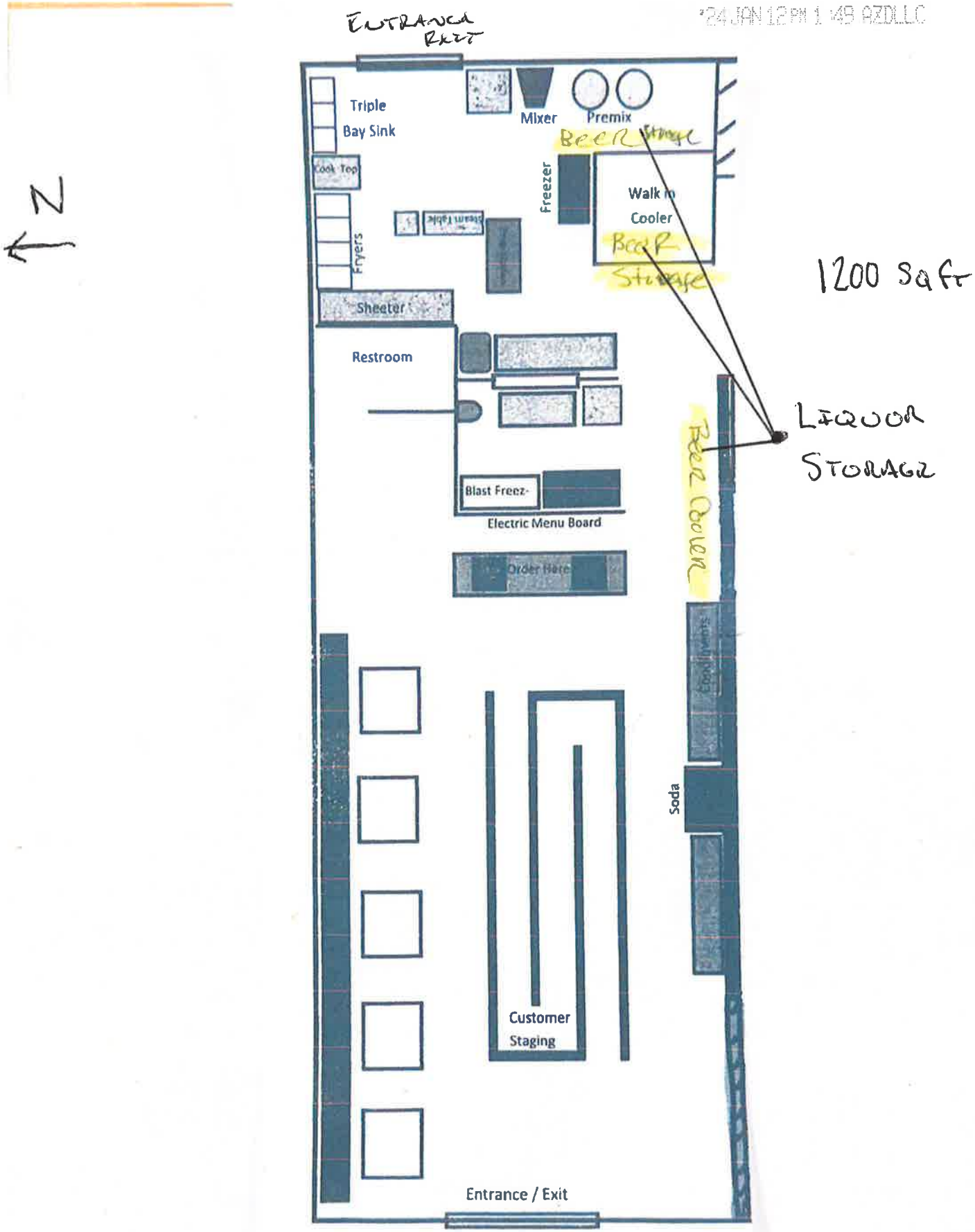

NOTICE

APPLICATION TO SELL ALCOHOLIC BEVERAGES

DATE POSTED: Monday, February 5, 2024

A HEARING ON A LIQUOR LICENSE APPLICATION SHALL BE HELD BEFORE THE

Pinal County Board of Supervisors

PLACE 135 N. Pinal St., Florence, AZ 85132 **DATE/TIME** Wednesday, March 6, 2024 @ 9:30 a.m.

HEARING DATES SUBJECT TO CHANGE, TO VERIFY CALL: (520) 866-6068

THE LOCAL GOVERNING BODY WILL RECOMMEND TO THE STATE LIQUOR BOARD WHETHER THE BOARD SHOULD GRANT OR DENY THE LICENSE. THE STATE LIQUOR BOARD MAY HOLD A HEARING TO CONSIDER THE RECOMMENDATION OF THE LOCAL GOVERNING BODY. ANY PERSON RESIDING OR OWNING OR LEASING PROPERTY WITHIN A ONE-MILE RADIUS MAY CONTACT THE STATE LIQUOR BOARD IN WRITING TO REGISTER AS A PROTESTER. TO REQUEST INFORMATION REGARDING PROCEDURES BEFORE THE BOARD AND NOTICE OF ANY BOARD HEARINGS REGARDING THIS APPLICATION, CONTACT THE **STATE LIQUOR BOARD**: **800 W. WASHINGTON, 5TH FLOOR, PHOENIX, AZ. 85007 (602) 542-9789**

INDIVIDUALS REQUIRING ADA ACCOMMODATIONS CALL - LOCAL GOVERNING BODY: (520) 866-6068 STATE LIQUOR DEPT: (602) 542-9789

POST ONE COPY OF THE APPLICATION FORM BELOW THIS NOTICE.

PHOENIX SAN TAN VALLEY
pepsi
NOTICE
APPLICATION TO SELL ALCOHOLIC BEVERAGES
DATE POSTED: Monday, February 5, 2024
A HEARING ON A LIQUOR LICENSE APPLICATION SHALL BE HELD BEFORE THE
Pinal County Board of Supervisors
PLACE DATE/TIME Wednesday, March 6, 2024
HEARING DATES SUBJECT TO CHANGE, TO VERIFY CALL:
THE LOCAL GOVERNING BODY WILL RECOMMEND TO THE STATE LIQUOR BOARD WHETHER THE BOARD SHOULD GRANT OR DENY THE LICENSE. THE STATE LIQUOR BOARD MAY HOLD A HEARING TO CONSIDER THE RECOMMENDATION OF THE LOCAL GOVERNING BODY. ANY PERSON RESIDING OR OWNING OR LEASING PROPERTY WITHIN A ONE-MILE RADIUS MAY CONTACT THE STATE LIQUOR BOARD IN WRITING TO REGISTER AS A PROTESTER. TO REQUEST INFORMATION REGARDING PROCEDURES BEFORE THE BOARD AND NOTICE OF ANY BOARD HEARINGS REGARDING THIS APPLICATION, CONTACT THE STATE LIQUOR BOARD
WARNING
FOOD ALLERGY WARNING
Our goods may contain peanuts, tree nuts, wheat, eggs, milk, soy product, or Shellfish. PLEASE ASK YOU SERVER, IF YOU HAVE ANY CONCERNS.
02.05.2024 14:27

ghett-yo WINGS
OPEN DAILY 10:30 A.M. -
PULL
ghett-yo WINGS
LUNCH COMBOS!
11 AM TO 2 PM DAILY
GHETT-YO BURGER · CHICKEN SANDWICH
OR 6 BONELESS WINGS
WITH FRIES & SODA
$10
G Pay
PHOENIX SAN TAN VALLEY
pepsi
WARNING
NOTICE
APPLICATION TO SELL ALCOHOLIC BEVERAGES
DATE POSTED: Monday, February 5, 2024
Pinal County Board of Supervisors
02.05.2024 14:27

PINAL COUNTY
PUBLIC HEALTH
E
Food Establishment Rating Card
FOOD SAFETY
Stuart Shainberg
Certified Food Protection Manager
02.05.2024 14:27

POSTING

Job# _____
DLLC use only

Arizona Dept. of Liquor Licenses and Control
800 W. Washington St. 5th Floor Phoenix, AZ 85007
(602) 542-5141

Type or Print with Black Ink

Date of Posting: 02 / 05 / 24 Date of Posting Removal: 2 / 26 / 24

Applicant's Name: Repinski (Last) Jared (First) Michael (Middle)

Business Address: 40975 N. Ironwood Drive #B104 (Street), San Tan Valley (City) 85140 (Zip)

I hereby certify that pursuant to A.R.S. 4-201, I posted notice in a conspicuous place on the premises proposed to be licensed by the above applicant and said notice was posted for at least twenty (20) days.

Travers Hunter — Print Name of City/County Official
Code Compliance Supervisor — Title
520-866-6858 — Phone Number

Signature
2/26/24 — Date Signed

Return this affidavit with your recommendations or any other related documents.
If you have any questions please call (602) 542-5141 and ask for the Licensing Division.

7/21/2022

Individuals requiring ADA accommodations please call (602)542-2999

Local Governing Body Recommendation

A.R.S. § 4-201(C)

Arizona Dept. of Liquor Licenses and Control
800 W. Washington St. 5th Floor Phoenix, AZ 85007
(602) 542-5141

Type or Print with Black Ink

City or Town of: _____ Liquor License/Application #: _____
(Circle one) **(Arizona license/application #)**

County of: _____ City/Town/County #: _____

Licensed establishment that will be operating within an **"entertainment district"** as described in A.R.S. §4-207(D)(2),

_____ _____
(Name of entertainment district) **(Date of resolution to create the entertainment district)**

A boundary map of entertainment district must be attached.

The _____ at a_____ meeting held
(Governing body) **(Regular or special)**

on the _____of_____, _____ considered the application of _____
(Day) **(Month)** **(Year)** **(Name of applicant)**

for a license to sell spirituous liquor at the premises described in the application as provided by A.R.S §4-201.

ORDER OF APPROVAL/DISAPPROVAL

IT IS THEREFORE ORDERED that the license APPLICATION OF _____
(Name of applicant)

to sell spirituous liquor of the class and in the manner designated in the application, is hereby recommended

for_____.
(Approval, disapproval, or no recommendation)

TRANSMISSION OF ORDER TO STATE

IT IS FURTHER ORDERED that a certified copy of this order be immediately transmitted to the State Department of Liquor, License Division, 800 W Washington, 5th Floor, Phoenix, Arizona 85007.

Dated at _____ on _____, _____, _____.
(Location) **(Day)** **(Month)** **(Year)**

_____ _____
(Printed name of city, town or county clerk) **(Signature of city, town or county clerk)**

PINAL COUNTY
WIDE OPEN OPPORTUNITY

AGENDA ITEM

March 6, 2024 ADMINISTRATION BUILDING A
FLORENCE, ARIZONA

REQUESTED BY:

Funds #:

Dept. #:

Dept. Name: Clerk of the Board

Director: Natasha Kennedy

BRIEF DESCRIPTION OF AGENDA ITEM AND REQUESTED BOARD ACTION:

Discussion/approval/disapproval of the Fireworks Display Permit application of Jelly Roll at Country Thunder on behalf of Pyrotecnico for supervised fireworks display to be held on Saturday, April 13, 2024, at 20585 E. Water Way, Florence, Arizona 85132. Supervisor District #5. (Natasha Kennedy)

BRIEF DESCRIPTION OF THE FISCAL CONSIDERATIONS AND/OR EXPECTED FISCAL IMPACT OF THIS AGENDA ITEM:

BRIEF DESCRIPTION OF THE EXPECTED PERFORMANCE IMPACT OF THIS AGENDA ITEM:

MOTION:

Considering the recommended approval from Emergency Management, Risk Management, Pinal County Sheriff's Office and notification of the local Fire District, Town of Florence, approve as presented.

History

Time	Who	Approval
2/27/2024 10:51 AM	Clerk of the Board	Yes

ATTACHMENTS:

Click to download

- Emergency Management Memo to Board of Supervisors
- Risk Management Memo to Board of Supervisors
- Application for Fireworks Country Thunder

Joe Ortiz
Public Works Managing Director

Merissa Mendoza
Public Health Director

Kore Redden
Public Health Deputy Director

PINAL COUNTY
WIDE OPEN OPPORTUNITY

Leo Lew
County Manager

TO: Natasha Kennedy, Pinal County Clerk of the Board

FROM: Courtney Prock, Operations Manager CP

THRU: Kore Redden, Emergency Manager / Deputy Director

DATE: February 22nd, 2024

RE: Firework Display Permit Application – Unincorporated Pinal County, Country Thunder

Fireworks Productions of Arizona is seeking approval from the Pinal County Board of Supervisors for the following permit location and date for a firework display:

Unincorporated Pinal County, Country Thunder April 13th, 2024

The Office of Emergency Management has reviewed the Application for Firework Display submitted for the event. Our office has no objection of the issuance of this permit.

Office of Emergency Management

85 N Florence Street, PO Box 749 Florence, AZ 85132
T 520-509-3555 Hours: M-F 8:00 am – 5:00 pm F 520-866-6511

www.pinalcountyaz.gov

PINAL COUNTY

WIDE OPEN OPPORTUNITY

To: **Natasha Kennedy, Pinal County Clerk of the Board**

From: **Deb Somdahl, Division Manager Risk & Safety**

cc: **Claudia Lujan, HR Director**
Mary Ellen Sheppard, Deputy County Manager

Date: **February 22, 2024**

RE: **Applications for Firework Display**

Pyrotecnico F/X LLC is seeking approval from the Pinal County Board of Supervisors for the following permit for a fireworks/pyrotech display:

Country Thunder Event – April 13, 2024 – Jelly Roll performance

Human Resources/ Risk Management Division has reviewed the certificate of insurance that was provided with the completed *Pinal County Application For Firework Display*, along with the required bond, which was provided separately.

Both are in compliance with the requirements stated in the application, and the approved documents are attached.

Risk Management has no objection to the issuance of the permit.

CERTIFICATE OF LIABILITY INSURANCE

DATE (MM/DD/YYYY) 2/12/2024

THIS CERTIFICATE IS ISSUED AS A MATTER OF INFORMATION ONLY AND CONFERS NO RIGHTS UPON THE CERTIFICATE HOLDER. THIS CERTIFICATE DOES NOT AFFIRMATIVELY OR NEGATIVELY AMEND, EXTEND OR ALTER THE COVERAGE AFFORDED BY THE POLICIES BELOW. THIS CERTIFICATE OF INSURANCE DOES NOT CONSTITUTE A CONTRACT BETWEEN THE ISSUING INSURER(S), AUTHORIZED REPRESENTATIVE OR PRODUCER, AND THE CERTIFICATE HOLDER.

IMPORTANT: If the certificate holder is an ADDITIONAL INSURED, the policy(ies) must be endorsed. If SUBROGATION IS WAIVED, subject to the terms and conditions of the policy, certain policies may require an endorsement. A statement on this certificate does not confer rights to the certificate holder in lieu of such endorsement(s).

PRODUCER
Acrisure, LLC dba Britton Gallagher & Associates
One Cleveland Center, Floor 30
1375 East 9th Street
Cleveland OH 44114

CONTACT NAME:
PHONE (A/C, No, Ext): 216-658-7100 FAX (A/C, No): 216-658-7101
E-MAIL ADDRESS: info@brittongallagher.com

INSURER(S) AFFORDING COVERAGE	NAIC #
INSURER A : Everest Indemnity Insurance Co.	10851
INSURER B : Everest Denali Insurance Company	16044
INSURER C : Arch Speciality Ins Co	21199
INSURER D : Continental Indemnity Company	28258
INSURER E :	
INSURER F :	

INSURED 2299
Pyrotecnico F/X LLC
302 Wilson Road
New Castle PA 16103

COVERAGES **CERTIFICATE NUMBER:** [redacted] **REVISION NUMBER:**

THIS IS TO CERTIFY THAT THE POLICIES OF INSURANCE LISTED BELOW HAVE BEEN ISSUED TO THE INSURED NAMED ABOVE FOR THE POLICY PERIOD INDICATED. NOTWITHSTANDING ANY REQUIREMENT, TERM OR CONDITION OF ANY CONTRACT OR OTHER DOCUMENT WITH RESPECT TO WHICH THIS CERTIFICATE MAY BE ISSUED OR MAY PERTAIN, THE INSURANCE AFFORDED BY THE POLICIES DESCRIBED HEREIN IS SUBJECT TO ALL THE TERMS, EXCLUSIONS AND CONDITIONS OF SUCH POLICIES. LIMITS SHOWN MAY HAVE BEEN REDUCED BY PAID CLAIMS.

INSR LTR	TYPE OF INSURANCE	ADDL INSR	SUBR WVD	POLICY NUMBER	POLICY EFF (MM/DD/YYYY)	POLICY EXP (MM/DD/YYYY)	LIMITS	
A	GENERAL LIABILITY	Y	Y	[redacted]	10/14/2023	10/14/2024	EACH OCCURRENCE	$ 1,000,000
	X COMMERCIAL GENERAL LIABILITY						DAMAGE TO RENTED PREMISES (Ea occurrence)	$ 500,000
	CLAIMS-MADE X OCCUR						MED EXP (Any one person)	$
							PERSONAL & ADV INJURY	$ 1,000,000
							GENERAL AGGREGATE	$ 2,000,000
	GEN'L AGGREGATE LIMIT APPLIES PER:						PRODUCTS - COMP/OP AGG	$ 2,000,000
	POLICY X PRO-JECT LOC							$
B	AUTOMOBILE LIABILITY	Y	Y	[redacted]	10/14/2023	10/14/2024	COMBINED SINGLE LIMIT (Ea accident)	$ 1,000,000
	X ANY AUTO						BODILY INJURY (Per person)	$
	ALL OWNED AUTOS / SCHEDULED AUTOS						BODILY INJURY (Per accident)	$
	X HIRED AUTOS / X NON-OWNED AUTOS						PROPERTY DAMAGE (Per accident)	$
								$
C	UMBRELLA LIAB X OCCUR	Y	Y	[redacted]	10/14/2023	10/14/2024	EACH OCCURRENCE	$ 4,000,000
	X EXCESS LIAB CLAIMS-MADE						AGGREGATE	$ 4,000,000
	DED RETENTION $							$
D	WORKERS COMPENSATION AND EMPLOYERS' LIABILITY		Y	[redacted]	10/14/2023	10/14/2024	X WC STATU-TORY LIMITS / OTH-ER	
	ANY PROPRIETOR/PARTNER/EXECUTIVE OFFICER/MEMBER EXCLUDED? (Mandatory in NH) Y/N N	N/A					E.L. EACH ACCIDENT	$ 1,000,000
	If yes, describe under DESCRIPTION OF OPERATIONS below						E.L. DISEASE - EA EMPLOYEE	$ 1,000,000
							E.L. DISEASE - POLICY LIMIT	$ 1,000,000
A	Excess Liability #2	Y	Y	[redacted]	10/14/2023	10/14/2024	Each Occ/ Aggregate Total Limits	$5,000,000 $10,000,000

DESCRIPTION OF OPERATIONS / LOCATIONS / VEHICLES (Attach ACORD 101, Additional Remarks Schedule, if more space is required)
Additional Insured extension of coverage is provided by above referenced General Liability policy where required by written agreement.
Pinal County and its departments, agencies, officers, officials, agents, employees, and volunteers.

CERTIFICATE HOLDER

Pinal County
135 N. Pinal St.
Florence AZ 85132
USA

CANCELLATION

SHOULD ANY OF THE ABOVE DESCRIBED POLICIES BE CANCELLED BEFORE THE EXPIRATION DATE THEREOF, NOTICE WILL BE DELIVERED IN ACCORDANCE WITH THE POLICY PROVISIONS.

AUTHORIZED REPRESENTATIVE

© 1988-2010 ACORD CORPORATION. All rights reserved.

The ACORD name and logo are registered marks of ACORD

THIS ENDORSEMENT CHANGES THE POLICY. PLEASE READ IT CAREFULLY.

ADDITIONAL INSURED – DESIGNATED PERSON OR ORGANIZATION

This endorsement modifies insurance provided under the following:

COMMERCIAL GENERAL LIABILITY COVERAGE PART

SCHEDULE

Name Of Additional Insured Person(s) Or Organization(s)
ANY PERSON OR LEGAL ENTITY IN WHICH YOU HAVE A WRITTEN CONTRACT, AGREEMENT, OR PERMIT WHICH REQUIRES THAT YOU NAME THE CONTRACTING PARTY AS AN ADDITIONAL INSURED. Pinal County and its departments, agencies, officers, officials, agents, employees, and volunteers.
Information required to complete this Schedule, if not shown above, will be shown in the Declarations.

A. Section II – Who Is An Insured is amended to include as an additional insured the person(s) or organization(s) shown in the Schedule, but only with respect to liability for "bodily injury", "property damage" or "personal and advertising injury" but only to the extent caused, in whole or in part, by your acts or omissions or the acts or omissions of those acting on your behalf:

1. In the performance of your ongoing operations; or
2. In connection with your premises owned by or rented to you.

B. The insurance afforded to an additional insured shall only include the insurance required by the terms of the written agreement and shall not be broader than the coverage provided within the terms of the Coverage Part.

C. The Limits of Insurance afforded to an additional insured shall be the lesser of the following:

1. The Limits of Insurance required by the written agreement between the parties; or
2. The Limits of Insurance provided by this Coverage Part.

D. With respect to the insurance afforded to an additional insured, the following additional exclusion applies:

This insurance does not apply to "bodily injury", "property damage" or "personal and advertising injury" arising out of any act or omission of an additional insured or any of its employees.

Copyright, Everest Reinsurance Company 2009
Includes copyrighted material of Insurance Services Office, Inc., used with its permission.

TRAVELERS

BOND
(License or Permit - Definite Term)

Bond No. [redacted]

WE, PYROTECNICO FX, LLC, as Principal, and Travelers Casualty and Surety Company of America, a corporation duly incorporated under the laws of the State of Connecticut and authorized to do business in the state of ARIZONA, as Surety, are held and firmly bound unto Pinal County, as Obligee, in the penal sum of Five Hundred Dollars ($500.00), for the payment of which we hereby bind ourselves, our heirs, executors and administrators, jointly and severally, firmly by these presents.

WHEREAS, the Principal has obtained or is about to obtain a license or permit for Fireworks Display.

NOW, THEREFORE, THE CONDITIONS OF THIS OBLIGATION ARE SUCH, that if the Principal shall faithfully comply with all applicable laws, statutes, ordinances, rules or regulations, pertaining to the license or permit issued, then this obligation shall be null and void; otherwise to remain in full force and effect.

This bond is for a definite term beginning February 13, 2024, and ending February 13, 2025, and may be continued at the option of the Surety by Continuation Certificate.

PROVIDED, that regardless of the number of years this bond is in force, the Surety shall not be liable hereunder for a larger amount, in the aggregate, than the penal sum listed above.

PROVIDED FURTHER, that the Surety may terminate its liability hereunder as to future acts of the Principal at any time by giving thirty (30) days written notice of such termination to the Obligee.

SIGNED, SEALED AND DATED this February 20, 2024.

PYROTECNICO FX, LLC

By: _____ Principal

Travelers Casualty and Surety Company of America

By: _____ Russell E. Vance, Attorney-in-Fact

HARTFORD, CONN. TRAVELERS CASUALTY AND SURETY COMPANY OF AMERICA

_____
Producer Name
(Required in Arizona Only)

S-2151BPRO (01/24)

TRAVELERS	Travelers Casualty and Surety Company of America Travelers Casualty and Surety Company St. Paul Fire and Marine Insurance Company Farmington Casualty Company

POWER OF ATTORNEY

KNOW ALL MEN BY THESE PRESENTS: That Travelers Casualty and Surety Company of America, Travelers Casualty and Surety Company, St. Paul Fire and Marine Insurance Company, and Farmington Casualty Company are corporations duly organized under the laws of the State of Connecticut (herein collectively called the "Companies"), and that the Companies do hereby make, constitute and appoint **Russell E. Vance**, of **Hartford, CT**, their true and lawful Attorney(s)-in-Fact, to sign, execute, seal and acknowledge the following bond:

Surety Bond No.: [redacted] **Principal: PYROTECNICO FX, LLC**

IN WITNESS WHEREOF, the Companies have caused this instrument to be signed and their corporate seals to be hereto affixed, this **21st** day of **April, 2021.**

State of Connecticut

By: _____
Robert L. Raney, Senior Vice President

City of Hartford ss.

On this the **21st** day of **April, 2021**, before me personally appeared **Robert L. Raney**, who acknowledged himself to be the Senior Vice President of each of the Companies, and that he, as such, being authorized so to do, executed the foregoing instrument for the purposes therein contained by signing on behalf of said Companies by himself as a duly authorized officer.

IN WITNESS WHEREOF, I hereunto set my hand and official seal.

My Commission expires the **30th** day of **June, 2026**

_____
Anna P. Nowik, Notary Public

This Power of Attorney is granted under and by the authority of the following resolutions adopted by the Boards of Directors of each of the Companies, which resolutions are now in full force and effect, reading as follows:

RESOLVED, that the Chairman, the President, any Vice Chairman, any Executive Vice President, any Senior Vice President, any Vice President, any Second Vice President, the Treasurer, any Assistant Treasurer, the Corporate Secretary or any Assistant Secretary may appoint Attorneys-in-Fact and Agents to act for and on behalf of the Company and may give such appointee such authority as his or her certificate of authority may prescribe to sign with the Company's name and seal with the Company's seal bonds, recognizances, contracts of indemnity, and other writings obligatory in the nature of a bond, recognizance, or conditional undertaking, and any of said officers or the Board of Directors at any time may remove any such appointee and revoke the power given him or her; and it is

FURTHER RESOLVED, that the Chairman, the President, any Vice Chairman, any Executive Vice President, any Senior Vice President or any Vice President may delegate all or any part of the foregoing authority to one or more officers or employees of this Company, provided that each such delegation is in writing and a copy thereof is filed in the office of the Secretary; and it is

FURTHER RESOLVED, that any bond, recognizance, contract of indemnity, or writing obligatory in the nature of a bond, recognizance, or conditional undertaking shall be valid and binding upon the Company when (a) signed by the President, any Vice Chairman, any Executive Vice President, any Senior Vice President or any Vice President, any Second Vice President, the Treasurer, any Assistant Treasurer, the Corporate Secretary or any Assistant Secretary and duly attested and sealed with the Company's seal by a Secretary or Assistant Secretary; or (b) duly executed (under seal, if required) by one or more Attorneys-in-Fact and Agents pursuant to the power prescribed in his or her certificate or their certificates of authority or by one or more Company officers pursuant to a written delegation of authority; and it is

FURTHER RESOLVED, that the signature of each of the following officers: President, any Executive Vice President, any Senior Vice President, any Vice President, any Assistant Vice President, any Secretary, any Assistant Secretary, and the seal of the Company may be affixed by facsimile to any Power of Attorney or to any certificate relating thereto appointing Resident Vice Presidents, Resident Assistant Secretaries or Attorneys-in-Fact for purposes only of executing and attesting bonds and undertakings and other writings obligatory in the nature thereof, and any such Power of Attorney or certificate bearing such facsimile signature or facsimile seal shall be valid and binding upon the Company and any such power so executed and certified by such facsimile signature and facsimile seal shall be valid and binding on the Company in the future with respect to any bond or understanding to which it is attached.

I, **Kevin E. Hughes**, the undersigned, Assistant Secretary of each of the Companies, do hereby certify that the above and foregoing is a true and correct copy of the Power of Attorney executed by said Companies, which remains in full force and effect.

Dated this 20 day of February, 2024.

_____
Kevin E. Hughes, Assistant Secretary

To verify the authenticity of this Power of Attorney, please call us at 1-800-421-3880.
Please refer to the above-named Attorney(s)-in-Fact and the details of the bond to which this Power of Attorney is attached.

TRAVELERS

IMPORTANT NOTICE REGARDING COMPENSATION DISCLOSURE

For information about how Travelers compensates independent agents, brokers, or other insurance producers, please visit this website: www.travelers.com/w3c/legal/Producer_Compensation_Disclosure.html

If you prefer, you can call the following toll-free number: 1-866-904-8348. Or you can write to us at Travelers, Enterprise Development, One Tower Square, Hartford, CT 06183.

©2009 The Travelers Companies, Inc. All Rights Reserved

PINAL COUNTY

WIDE OPEN OPPORTUNITY

APPLICATION FOR FIREWORKS DISPLAY

Return to: Clerk of the Board Office, P.O. Box 827, Florence, Arizona 85132 at least 30 days prior to the event date.

Arizona Revised Statutes §36-1603, Permit for public display. Every display shall be handled by a competent operator, and shall be of a character and located, discharged and fired so that it will not be hazardous to property or endanger any person. Before a permit is granted, the operator, location and handling of the display shall be approved, after investigation, by the fire chief of the city or town or the sheriff of the county as is appropriate. After a permit is granted, the sale, possession, use and distribution of fireworks for the display shall be lawful for that purpose only. No permit is transferable or assignable.

Further, A.R.S. §36-1604 requires that the governing body shall require each applicant to provide a satisfactory bond of not less than $500. In addition, the Pinal County Government also requires proof of liability insurance limits of not less than $3M per occurrence and $6M aggregate in the form of a certificate of liability insurance naming Pinal County and its departments, agencies, officers, officials, agents, employees and volunteers as Certificate Holder and Additional Insureds as respects to any and all damages which may be caused to persons or property by reason of the fireworks display. The Additional Insured Endorsement shall be attached to the certificate of insurance.

Complete the following application and return by hand-delivery to the Clerk of the Board of Supervisors 135 N. Pinal Street, Florence, Arizona 85132 **at least 30 days prior to the event date** or by mail to:

Clerk of the Board of Supervisors
PO Box 827
Florence, Arizona 85132

All applications must have the following documentation attached:

1. Proof of appropriate bond or insurance payable to Pinal County. (A.R.S. §36-1604)
2. Fireworks Display Site Map indicating the following:
   - North direction
   - Distance from firing area to impact/fallout area
   - Spectator location
   - Storage area
   - Fire department access
   - Hydrants
   - Distance to structures
   - Overhead lines
3. List of fireworks to be discharged. The Director of Display for the fireworks company is expected to be licensed and/or trained or have other verification of expertise.
4. Verification from local fire department that they were notified of event, date, location and time.

NOTE: The County's review of Fireworks Display Permits include investigation and reports from the Pinal County Sheriff's Office, Emergency Management, Risk Management, and Notification of the Local Fire District.

For more information and/or questions, please call the Clerk of Board of Supervisors at (520) 866-6068.

PINAL COUNTY

PINAL COUNTY APPLICATION FOR FIREWORKS DISPLAY

Return to: Clerk of the Board Office, P.O. Box 827, Florence, Arizona 85132 at least 30 days prior to the event date.

Application is hereby made for the granting of a permit to conduct a supervised fireworks display on **(DATE)** 4/13/24 at **(TIME)** TBD **(PLACE)** Country Thunder Festival located at **(ADDRESS)** 20585 E. Water Way **(CITY)** Florence, Arizona **(ZIP)** 85132. Applicant states that Mike Love will be in charge of this display and responsible for the acts performed thereby; and Pyrotecnico states that she/he is a qualified and competent person to direct this display in such a manner that will not be hazardous to property or endanger any person.

(DIRECTOR OF DISPLAY) Kate Devlin

(PERSON IN CHARGE OF PREMISES WHERE DISPLAY IS LOCATED) Lenore Evans

(PHONE NUMBER) [redacted]

NOTIFICATION OF LOCAL FIRE DISTRICT

Name of District: Florence Fire Dept Person Notified Chief Snyder and Ken Diamond w/ Rural Metr

Date: 2/13/24

OFFICIAL USE ONLY

APPROVAL OF FIREWORKS DISPLAY BY SHERIFF

I have investigated the premises described by the applicant and found them to be satisfactory and found him/her to be a competent operator.

Pinal County Sheriff

PERMIT FOR FIREWORKS DISPLAY

The application of _____ having been filed with the undersigned Board of Supervisor, pursuant to Section 36-1603, Arizona Revised Statutes, 1956, together with proper bond as provided by law and same having been approved by the Sheriff.

Permission is therefore and hereby granted to _____ to conduct a fireworks display at _____ AND IN THE EVENT OF POSTPONEMENT OF SAID SHOW, said display be given not later than one week from date specified above.

Dated this ____Day of _____, 20___

PINAL COUNTY BOARD OF SUPERVISORS

By: _____
Chairman

[redacted]

[redacted]

[redacted]

[redacted]

[redacted]

JELLY ROLL FESTIVALS

PYROTECNICO™ fx

A LIVE EVENTS COMPANY

COUNTRY THUNDER, FLORENCE, AZ

APRIL, 13, 2024

TABLE OF CONTENTS

PAGE	TITLE
3	Display Information
4	Effects Information
5	Plots
6	Industry Terminology
7	Qualifications
14	Flame Effects
45	Pyrotechnic Effects
47	Other Effects

SPECIAL EFFECTS DISPLAY INFORMATION

Applicant:
Pyrotecnico FX
[redacted]

Contact: [redacted]

Event: Jelly Roll Performance

Display Location: Country Thunder, Florence, AZ
Display Date(s): April 13, 2024

Technicians:
Mike Love [redacted]
Jack Kingry [redacted]

EFFECT INFORMATION

QTY	DESCRIPTION
55	Waterfalls
12	Salamanders + Cans
6	Club Cannon Pro Jets
14	50lb CO2 Tanks

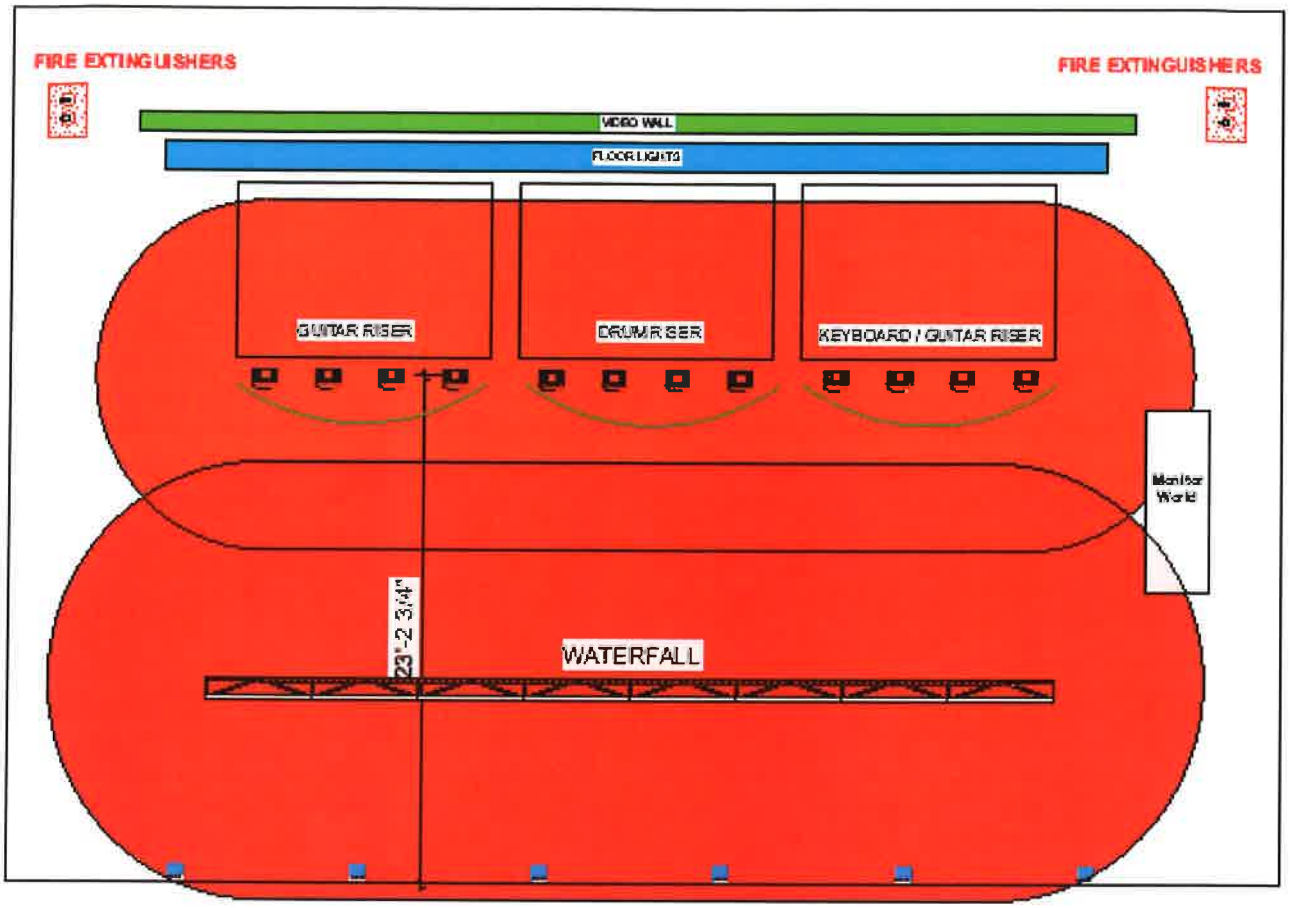

12x Salamander Flame Unit
Fuel: Canister fuel

6x Club Cannon Pro Cryo Jet

Waterfall Rail
Product: Gerbs

NOTES:

- Basic Stage Size: 40' x 60'
- Trim height: Varies
- CO2 & Water Fire Extinguishers located on both sides of the stage
- 15' distance from pyro/stage effects to audience
- Spotters onstage

PYROTECNICO fx
A LIVE EVENTS COMPANY

Project Name / Date: Jelly Roll - April 13, 2024	Venue / Tour: Country Thunder - Florence, AZ
Designer:	Sheet Title: FLAMES / PYRO
Project Manager: Kate Devlin kdevlin@pyrotecnico.com	Date / Ver: 02/12/2024
	Drawn by: K. Devlin

This drawing and any documentation associated with it represent visual concepts and effect placement only. These documents are not engineering or instruction documents for construction or assembly. The designers and drafts person are not qualified to determine the structural or electrical appropriateness of this design, and will not assume responsibility for improper engineering, construction, handling, or use. All materials, equipment, construction and installation must comply with the strictest applicable Federal and Local Fire, Safety, Energy and Environmental codes and practices.

INDUSTRY TERMINOLOGY

'Pyrotechnics' or 'Pyro's'
These are 'Articles Pyrotechnic UN 0431 1.4G & UN 0432 1.4S' that are specifically manufactured to be fired inside or outside at close proximity to public, performers, set and buildings.

'Product Height'
This is the maximum height the output of the product will be projected to.

'Safety Distance'
This refers to the minimum amount of distance, horizontally, between the pyrotechnic and the audience.

'Performer Safety Distance'
This refers to the minimum amount of distance, horizontally, between the pyrotechnic and the performer / persons on stage.

'Safety Height'
This refers to the minimum amount of distance, vertically, between the pyrotechnic and roof or ceiling,
obstacles, personnel and public.

'Performer Safety Height'
This refers to the minimum amount of distance, vertically, between the pyrotechnic and performer/ persons on stage.

'Fallout'
This refers to the possible debris or sparks produced from any type of pyrotechnic or firework. This is generally broken down into 'hot' and 'cold fallout'. The volume is defined as follows- 10-0. (10 = Vast, 0 = No fallout).

QUALIFICATIONS & INSURANCE

QUALIFICATIONS, EXPERIENCE, LICENSES OF THE OPERATOR(S) AND COMPANY LICENSES & CERTIFICATE OF INSURANCE

U.S. Department of Justice
Bureau of Alcohol, Tobacco, Firearms and Explosives

Federal Explosives License/Permit
(18 U.S.C. Chapter 40)

In accordance with the provisions of Title XI, Organized Crime Control Act of 1970, and the regulations issued thereunder (27 CFR Part 555), you may engage in the activity specified in this license or permit within the limitations of Chapter 40, Title 18, United States Code and the regulations issued thereunder, until the expiration date shown. **THIS LICENSE IS NOT TRANSFERABLE UNDER 27 CFR 555.53.** See "WARNINGS" and "NOTICES" on reverse.

Direct ATF Correspondence To [redacted]	License/Permit Number [redacted]
Chief, Federal Explosives Licensing Center (FELC) Mama Howard	Expiration Date **September 1, 2024**

Name
PYROTECNICO

Premises Address (Changes? Notify the FELC at least 10 days before the move.)
[redacted]

Type of License or Permit
23-IMPORTER OF EXPLOSIVES

Purchasing Certification Statement
The licensee or permittee named above shall use a copy of this license or permit to assist a transferor of explosives to verify the identity and the licensed status of the licensee or permittee as provided by 27 CFR Part 555. The signature on each copy must be an original signature. A faxed, scanned or e-mailed copy of the license or permit with a signature intended to be an original signature is acceptable. The signature must be that of the Federal Explosives Licensee (FEL) or a responsible person of the FEL. I certify that this is a true copy of a license or permit issued to the licensee or permittee named above to engage in the business or operations specified above under "Type of License or Permit."

Licensee/Permittee Responsible Person Signature: President/CEO
Position Title
STEPHEN V ITALE
Printed Name
Nov. 29, 2021
Date
[redacted]

Mailing Address (Changes? Notify the FELC of any changes.)
PYROTECNICO FIREWORKS INC
[redacted]
[redacted]

Federal Explosives License (FEL) Customer Service Information

Federal Explosives Licensing Center (FELC)
[redacted]

Toll-free Telephone Number: [redacted]
Fax Number:
E-mail: FELC@atf.gov

ATF Homepage: www.atf.gov

Change of Address *(27 CFR 555.54(a),(b))*. Licensees or permittees may during the term of their current license or permit remove their business or operations to a new location at which they intend regularly to carry on such business or operations. The licensee or permittee is required to give notification of the new location of the business or operations not less than 10 days prior to such removal, with the Chief, Federal Explosives Licensing Center. The license or permit will be valid for the remainder of the term of the original license or permit. **(The Chief, FELC, shall, if the licensee or permittee is not qualified, refer the request for amended license or permit to the Director of Industry Operations for denial in accordance with § 555.54.)**

Right of Succession *(27 CFR 555.59)*. (a) Certain persons other than the licensee or permittee may assume the right to carry on the same explosive materials business or operations at the same address shown on, and for the remainder of the term of, a current license or permit. Such persons are: (1) The surviving spouse or child, or executor, administrator, or other legal representative of a deceased Licensee or permittee, and (2) A receiver or trustee in bankruptcy, or an assignee for benefit of creditors. (b) In order to assume the right provided by this section, the person or persons continuing the business or operations shall furnish the license or permit for that business or operations for endorsement of such succession to the Chief, FELC, within 30 days from the date on which the successor begins to carry on the business or operations.

(Continued on reverse side)

Cut Here

Federal Explosives License/Permit (FEL) Information Card
License/Permit Name: **PYROTECNICO FIREWORKS INC**
Business Name: **PYROTECNICO**
License/Permit Number: [redacted]
License/Permit Type: **23-IMPORTER OF EXPLOSIVES**
Expiration: **September 1, 2024**
Please Note: Not Valid for the Sale or Other Disposition of Explosives.

WARNINGS

1. As provided in Title XI of the Organized Crime Control Act of 1970 (U.S.C. § 842(i)), it is unlawful for any person who (1) is under indictment for, or has been convicted in any court of, a crime punishable by imprisonment for a term exceeding 1 year, (2) is a fugitive from justice, (3) is an unlawful user of, or addicted to any controlled substance *(as defined in section 102 of the Controlled Substances Act (21 U.S.C. 802))*, (4) has been adjudicated as a mental defective or has been committed to a mental institution, to ship, transport, or receive any explosive materials in interstate or foreign commerce, (5) is an alien, other than an alien who is lawfully admitted for permanent residence *(as that term is defined in section 101(a)(20) of the Immigration and Nationalization Act)*, or meets any other exception under section 842(i)(5), (6) has been discharged from the armed forces under dishonorable conditions, or (7) having been a citizen of the United States, has renounced the citizenship of that person.

2. **Federal Regulation 27 CFR 555.53 - Licenses and permits issued under this part are not transferable to another person. In the event of the lease, sale, or other transfer of the business or operations covered by the license or permit, the successor must obtain the license or permit required by this part before commencing business or operations.**

3. **Alterations or Changes to the License or Permit. Alterations or changes in the original license or permit or in duplications thereof violates 18 U.S.C. 1001, an offense punishable by imprisonment for not more than 5 years and/or a fine of not more than $250,000.**

NOTICES

1. Any change in trade name or control of this business or operations MUST be reported within 30 days of the change to the Chief, Federal Explosives Licensing Center (FELC), 244 Needy Road, Martinsburg, WV 25405-9431. (27 CFR 555.56-555.57) A licensee or permittee who reports a Change of Control must, upon expiration of the license or permit, file an ATF Form 5400.13/5400.16.

2. Under § 555.46, Renewal of License/Permit, if a licensee or permittee intends to continue the business or operations described on a license or permit issued under this part during any portion of the ensuing year, the licensee or permittee shall, unless otherwise notified in writing by the Chief, FELC, execute and file with ATF prior to the expiration of the license or permit an application for a license or permit renewal, ATF Form 5400.14/5400.15 Part II, in accordance with the instructions on the form, and the required fee. In the event the licensee or permittee does not timely file an ATF Form 5400.14/5400.15 Part II, the licensee or permittee must file an ATF Form 5400.13/5400.16 as required by § 555.45, and obtain the required license or permit before continuing business or operations. A renewal application will automatically be mailed by ATF to the "mailing address" on the license or permit approximately 60 days prior to the expiration date of the license or permit. If the application is not received 30 days prior to the expiration date, the licensee or permittee should contact the FELC. **Note:** The user-limited permits are not renewable.

3. This license or permit is conditional upon compliance by you with the Clean Water Act (33 U.S.C. § 1341(a)).

4. THIS LICENSE OR PERMIT MUST BE POSTED AND KEPT AVAILABLE FOR INSPECTION (27 CFR 555.101)

Federal Explosives License (FEL) Customer Service Information

(Continued from front)

Discontinuance of Business *(27 CFR 555.61)(27 CFR 555.128)*. Where an explosives materials business or operations is succeeded by a new licensee or permittee, the records prescribed by this subpart shall appropriately reflect such facts and shall be delivered to the successor, or may be, within 30 days following business discontinuance, delivered to the ATF Out-of-Business Records Center, 244 Needy Road, Martinsburg, WV 25405, or to any ATF office in the division in which the business was located. Where discontinuance of the business is absolute, the records shall be delivered within 30 days following the business discontinuance to the ATF Out-of-Business Records Center, 244 Needy Road, Martinsburg, WV 25405, or to any ATF office in the division in which the business was located.

Explosive materials must be stored in conformance with requirements set forth in 27 CFR, Part 55. It is unlawful for any person to store any explosive materials in a manner not in conformity with these regulations.

TO REPORT LOST OR STOLEN EXPLOSIVES, YOU MUST IMMEDIATELY NOTIFY ATF:
CALL TOLL FREE - (888) ATF-BOMB

✂ Cut Here

Federal Explosives Licensing Center (FELC)
244 Needy Road
Martinsburg, WV 25405-9431

Toll-free number: (877) 283-3352
Fax number: (304) 616-4401
E-mail: FELC@atf.gov

ATF Hotline Numbers

Arson Hotline: 1-888-ATF-FIRE (1-888-283-3473)
Bomb Hotline: 1-888-ATF-BOMB (1-888-283-2662)
Report Illegal Firearms Activity: 1-800-ATF-GUNS (1-800-283-4867)
Firearms Theft Hotline: 1-888-930-9275
Report Stolen, Hijacked or Seized Cigarettes: 1-800-659-6242
Other Criminal Activity: 1-888-ATF-TIPS (1-888-283-8477)

CERTIFICATE OF LIABILITY INSURANCE

DATE (MM/DD/YYYY) 2/12/2024

THIS CERTIFICATE IS ISSUED AS A MATTER OF INFORMATION ONLY AND CONFERS NO RIGHTS UPON THE CERTIFICATE HOLDER. THIS CERTIFICATE DOES NOT AFFIRMATIVELY OR NEGATIVELY AMEND, EXTEND OR ALTER THE COVERAGE AFFORDED BY THE POLICIES BELOW. THIS CERTIFICATE OF INSURANCE DOES NOT CONSTITUTE A CONTRACT BETWEEN THE ISSUING INSURER(S), AUTHORIZED REPRESENTATIVE OR PRODUCER, AND THE CERTIFICATE HOLDER.

IMPORTANT: If the certificate holder is an ADDITIONAL INSURED, the policy(ies) must be endorsed. If SUBROGATION IS WAIVED, subject to the terms and conditions of the policy, certain policies may require an endorsement. A statement on this certificate does not confer rights to the certificate holder in lieu of such endorsement(s).

PRODUCER
Acrisure, LLC dba Britton Gallagher & Associates
One Cleveland Center, Floor 30
1375 East 9th Street
Cleveland OH 44114

CONTACT NAME:
PHONE (A/C, No, Ext): [redacted] FAX (A/C, No): [redacted]
E-MAIL ADDRESS: [redacted]

INSURED 2299
Pyrotecnico F/X LLC
[redacted]

INSURER(S) AFFORDING COVERAGE	NAIC #
INSURER A : Everest Indemnity Insurance Co.	[redacted]
INSURER B : Everest Denali Insurance Company	
INSURER C : Arch Speciality Ins Co	
INSURER D : Continental Indemnity Company	
INSURER E :	
INSURER F :	

COVERAGES **CERTIFICATE NUMBER:** 628190243 **REVISION NUMBER:**

THIS IS TO CERTIFY THAT THE POLICIES OF INSURANCE LISTED BELOW HAVE BEEN ISSUED TO THE INSURED NAMED ABOVE FOR THE POLICY PERIOD INDICATED. NOTWITHSTANDING ANY REQUIREMENT, TERM OR CONDITION OF ANY CONTRACT OR OTHER DOCUMENT WITH RESPECT TO WHICH THIS CERTIFICATE MAY BE ISSUED OR MAY PERTAIN, THE INSURANCE AFFORDED BY THE POLICIES DESCRIBED HEREIN IS SUBJECT TO ALL THE TERMS, EXCLUSIONS AND CONDITIONS OF SUCH POLICIES. LIMITS SHOWN MAY HAVE BEEN REDUCED BY PAID CLAIMS.

INSR LTR	TYPE OF INSURANCE	ADDL INSR	SUBR WVD	POLICY NUMBER	POLICY EFF (MM/DD/YYYY)	POLICY EXP (MM/DD/YYYY)	LIMITS	
A	GENERAL LIABILITY	Y	Y	[redacted]	10/14/2023	10/14/2024	EACH OCCURRENCE	$ 1,000,000
	X COMMERCIAL GENERAL LIABILITY						DAMAGE TO RENTED PREMISES (Ea occurrence)	$ 500,000
	CLAIMS-MADE X OCCUR						MED EXP (Any one person)	$
							PERSONAL & ADV INJURY	$ 1,000,000
							GENERAL AGGREGATE	$ 2,000,000
	GEN'L AGGREGATE LIMIT APPLIES PER:						PRODUCTS - COMP/OP AGG	$ 2,000,000
	POLICY X PRO-JECT LOC							$
B	AUTOMOBILE LIABILITY	Y	Y	[redacted]	10/14/2023	10/14/2024	COMBINED SINGLE LIMIT (Ea accident)	$ 1,000,000
	X ANY AUTO						BODILY INJURY (Per person)	$
	ALL OWNED AUTOS / SCHEDULED AUTOS						BODILY INJURY (Per accident)	$
	X HIRED AUTOS / X NON-OWNED AUTOS						PROPERTY DAMAGE (Per accident)	$
								$
C	UMBRELLA LIAB X OCCUR	Y	Y	[redacted]	10/14/2023	10/14/2024	EACH OCCURRENCE	$ 4,000,000
	X EXCESS LIAB CLAIMS-MADE						AGGREGATE	$ 4,000,000
	DED RETENTION $							$
D	WORKERS COMPENSATION AND EMPLOYERS' LIABILITY		Y	[redacted]	10/14/2023	10/14/2024	X WC STATU-TORY LIMITS / OTH-ER	
	ANY PROPRIETOR/PARTNER/EXECUTIVE OFFICER/MEMBER EXCLUDED? Y / N: N	N / A					E.L. EACH ACCIDENT	$ 1,000,000
	(Mandatory in NH) If yes, describe under DESCRIPTION OF OPERATIONS below						E.L. DISEASE - EA EMPLOYEE	$ 1,000,000
							E.L. DISEASE - POLICY LIMIT	$ 1,000,000
A	Excess Liability #2	Y	Y	[redacted]	10/14/2023	10/14/2024	Each Occ/ Aggregate Total Limits	$5,000,000 $10,000,000

DESCRIPTION OF OPERATIONS / LOCATIONS / VEHICLES (Attach ACORD 101, Additional Remarks Schedule, if more space is required)
Additional Insured extension of coverage is provided by above referenced General Liability policy where required by written agreement.
Pinal County and its departments, agencies, officers, officials, agents, employees, and volunteers.

CERTIFICATE HOLDER

Pinal County
135 N. Pinal St.
Florence AZ 85132
USA

CANCELLATION

SHOULD ANY OF THE ABOVE DESCRIBED POLICIES BE CANCELLED BEFORE THE EXPIRATION DATE THEREOF, NOTICE WILL BE DELIVERED IN ACCORDANCE WITH THE POLICY PROVISIONS.

AUTHORIZED REPRESENTATIVE

© 1988-2010 ACORD CORPORATION. All rights reserved.
The ACORD name and logo are registered marks of ACORD

POLICY NUMBER: [redacted]

COMMERCIAL GENERAL LIABILITY
ECG [redacted]

THIS ENDORSEMENT CHANGES THE POLICY. PLEASE READ IT CAREFULLY.

ADDITIONAL INSURED – DESIGNATED PERSON OR ORGANIZATION

This endorsement modifies insurance provided under the following:

COMMERCIAL GENERAL LIABILITY COVERAGE PART

SCHEDULE

Name Of Additional Insured Person(s) Or Organization(s)
ANY PERSON OR LEGAL ENTITY IN WHICH YOU HAVE A WRITTEN CONTRACT, AGREEMENT, OR PERMIT WHICH REQUIRES THAT YOU NAME THE CONTRACTING PARTY AS AN ADDITIONAL INSURED. Pinal County and its departments, agencies, officers, officials, agents, employees, and volunteers.
Information required to complete this Schedule, if not shown above, will be shown in the Declarations.

A. Section II – Who Is An Insured is amended to include as an additional insured the person(s) or organization(s) shown in the Schedule, but only with respect to liability for "bodily injury", "property damage" or "personal and advertising injury" but only to the extent caused, in whole or in part, by your acts or omissions or the acts or omissions of those acting on your behalf:

1. In the performance of your ongoing operations; or
2. In connection with your premises owned by or rented to you.

B. The insurance afforded to an additional insured shall only include the insurance required by the terms of the written agreement and shall not be broader than the coverage provided within the terms of the Coverage Part.

C. The Limits of Insurance afforded to an additional insured shall be the lesser of the following:

1. The Limits of Insurance required by the written agreement between the parties; or
2. The Limits of Insurance provided by this Coverage Part.

D. With respect to the insurance afforded to an additional insured, the following additional exclusion applies:

This insurance does not apply to "bodily injury", "property damage" or "personal and advertising injury" arising out of any act or omission of an additional insured or any of its employees.

[redacted]

Copyright, Everest Reinsurance Company 2009
Includes copyrighted material of Insurance Services Office, Inc., used with its permission.

FLAME INFO & SDS

INFORMATION ON EQUIPMENT AND SAFETY DATA SHEETS (SDS) FOR THE PYROTECHNIC MATERIAL(S) TO BE USED

SALAMANDER QUAD PRO

Salamander Quad Pro

Flame Effect System

User Manual

Version 1.0 – May 2014

Maximum Flame Heights

Coloured Fluid:

1 Canister: 3.5m / 12ft

2 Canisters: 4.5m / 15ft

3 Canisters: 5.5m / 18ft

4 Canisters: 6m / 20ft

Natural Fluid:

1 Canister: 4.5m / 15ft

2 Canisters: 6m / 20ft

3 Canisters: 7.5m / 25ft

4 Canisters: 8.5m / 28ft

Safety Information

This information should be read and thoroughly understood before use of the Salamander Quad Pro.

It is the responsibility of the user to be fully aware of all potential consequences and actions when using this machine.

The manufacturer cannot be held responsible for events occurring due to use of this machine by unqualified or untrained personnel.

Warning: All directions in the manual should be read thoroughly and completely understood before any attempt to use the machine.

The machine should only be operated by or under the instruction of trained personnel.

Any maintenance of the machine should only be carried out by the manufacturer or after the manufacturer's strict approval.

Should there be any doubt as to the safety of operation of the machine under any circumstances, the machine should be taken out of service immediately.

The Salamander Quad Pro must not be used in confined spaces, under any conditions of rain, snow or precipitation of any fluids, or moving air which will cause the flame to divert from a vertical path.

The Salamander Quad Pro should not be subjected to temperatures below 5°C or above 45°C, nor exposed to unsheltered conditions.

Warning: Failure to observe correct operating procedures may lead to serious injury, damage by fire, or explosion.

Warning: Before initial use and each subsequent use, the Salamander Quad Pro should be checked for functional suitability. Should any damage be observed or doubt about suitability of use occur, it should be immediately decommissioned and held for service.

Operational Guidance

The Salamander Quad Pro is only suitable for indoor use, or situations that meet the same environmental conditions.

The machine must only be used vertically, secured in position, protected from unauthorised interference, impact forces and vibration.

Any installation or repositioning should only be performed when the machine is cool, disconnected from the mains supply and all data communication.

Changing canisters should only be performed when the machine is powered down, the HSI is cool, and no other sources of ignition are present.

Safety distances must be given a priority when using the Salamander Quad Pro. This includes persons in the performance area, and surrounding flammable objects. Maximum flame heights are presented in this manual. Operators are expected to use this information to determine appropriate safety distances.

Full risk assessments must be made before use, and all relevant emergency failure procedures must be immediately available, including qualified personnel, fire extinguishers and first aid.

All operations should have undergone preliminary tests and rehearsal.

Always ensure it is possible to shut the machine down immediately in case of emergency. Use of an Emergency Stop to interrupt mains supply is recommended.

Use only Le Maître Chameleon Flame Fuel or Le Maître Salamander Flame Fuel. Use of alternate fuels might lead to unexpected behaviour.

The Salamander Quad Pro is controlled by instruction from the DMX-512 protocol. The manufacturer cannot be held responsible for incorrect application or malfunction of data sent via DMX. Should DMX isolation or other devices be required for safe operation, this e deemed the responsibility of the operator.

Avoid live-wiring DMX to the Salamander Quad Pro, ie. do not plug in or unplug DMX cables while the controller is actively transmitting data.

The Salamander Quad Pro is not designed for continual flame use. It is intended for short duration bursts, ie. maximum duration of 5 seconds.

Should the Salamander Quad Pro fail to fire correctly, immediately shut down the machine and allow it to cool before investigating the problem.

Contents

Maximum Flame Heights 1
Safety Information 2
Operational Guidance 3
Features and Dimensions 6
Product Overview 7
Product Description 7
Features 7
Specification 8
Operation 9
Getting Started 9
Control Panel 10
DMX Operation 10
Set-Up 12
Advanced Settings 13
tEC Menu 13
HSI Delay 13
DMX Filter 13
Tilt Switch 13
Troubleshooting 15
Maintenance 16
Firing Pin Adjustment 17
O-Ring Replacement 18
Contact Details 20
UK: 20
USA: 20
Warranty 21

Features and Dimensions

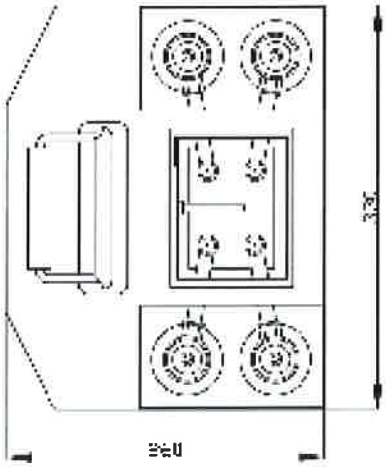

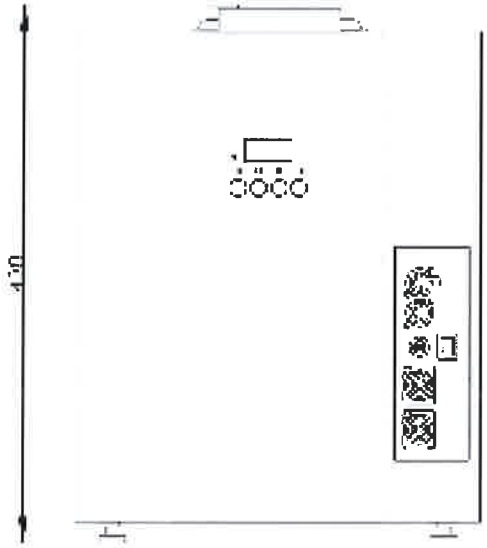

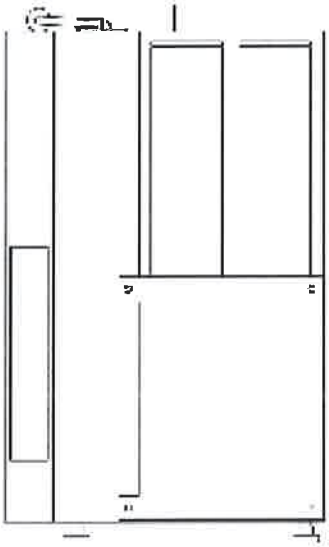

Dimensions in millimetres.

Product Overview

Product Description

The Salamander Quad Pro is a versatile new real flame effect from Le Maître Ltd. The four-canister system allows the unit to produce flames from 3m to over 7m in height. The unique firing mechanism eliminates the requirement for internal valves and accumulators, minimising the risk of flammable gas leaks, and a robust hot surface igniter ensures reliable flame ignition.

The canister based design removes the requirement for bulky and expensive propane bottles and high pressure hosing, and allows for a choice of fuels making the Salamander Quad Pro ideal for any venue where propane is not permitted.

Details of the full range of Le Maître products are available online at:

www.lemaitreltd.com and www.lemaitreusa.com

Features

- Flame height from 3.5m to 7.5m
- Four canister system
- Multiple colours and fuels available
- 30 seconds continuous flame or 35 fireballs per canister
- No internal valves or accumulators; flammable fuels are only stored within the canisters themselves
- DMX operation
- Robust hot surface igniter
- Igniter current monitoring
- Tilt safety switch

Specification

Power Requirements (EU): (US):	230VAC, 50Hz, 400W 120VAC, 60Hz, 400W
External Fusing (EU): (US):	3.15AT 6.3AT
Fuel Capacity:	4 x 500ml Canister
Fuel Type:	Propane / Butane mix OR Ethanol / Methanol mix (colour specific)
Effect Duration:	30s continuous / up to 35 fireballs per canister
Control:	DMX512 – 5 Channels (Igniter, 4x Fire)
Dimensions (mm):	433 (H) x 330 (W) x 260 (D)
Weight:	16kg

Operation

Getting Started

Remove the Salamander Quad Pro from all packaging and place on a flat, stable surface.

Prior to use, the Salamander Quad Pro should be inspected for damage. If the unit is found to be damaged, it should be removed from service immediately, and referred to Le Maître for servicing and repair.

Install four canisters of Le Maître Chameleon or Salamander flame fuel by screwing the canisters into the brass canister bases. Be careful not to over-tighten the canister as this risks damage to the canister, the canister base, and the seals within the canister base.

Unlike other flame effect systems, no gas should leave the canister as it is being installed. If escaping gas is detected, immediately remove the canister. The most probable cause is the tension of the spring supporting the firing pin. Refer to the Maintenance instructions for correct adjustment of this spring.

Power is supplied to the Salamander Quad Pro via the blue Neutrik PowerCon socket. A suitable mains cable fitted with a blue PowerCon plug must be used to connect the Salamander Quad Pro to a mains supply. The white PowerCon socket is a mains through connector allowing multiple Salamander Quad Pro to be powered from a single mains supply.

Please note: The blue Powercon must only ever be used as a mains input, and the white Powercon must only ever be used as a mains through / output.

Please note: Electrically, the Salamander Quad Pro's fuse and power switch are located after the mains through socket. This means the mains through socket will always be live while the Salamander Quad Pro is connected to a live mains supply, even if the unit is switched off, or the fuse has blown.

Control Panel

The Salamander Quad Pro is configured through an on board control panel featuring a 3 x 7-Segment LED display, 5 x indicator LEDs and 4 x multi-function buttons.

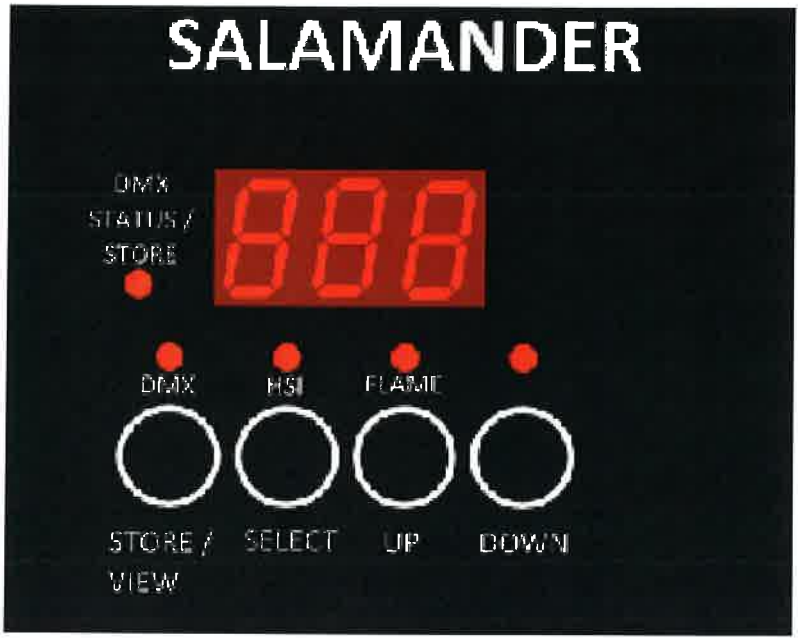

Figure 2: Salamander Quad Pro Control Panel

DMX Operation

The Salamander Quad Pro can only be operated through DMX-512. Five channels are required – one channel activates the HSI, the remaining four channels each operate one firing solenoid.

Two independent addresses can be set. The first address is for the HSI channel, the second address is the first of four fire channels. The three remaining fire channels will be the three consecutive channels.

For Example:

HSI – Channel 12. FLAME – Channel 2. HSI will be activated by channel 12. The fire channels will be 2, 3, 4 and 5.

The order of the canister channels can be seen in Figure 3.

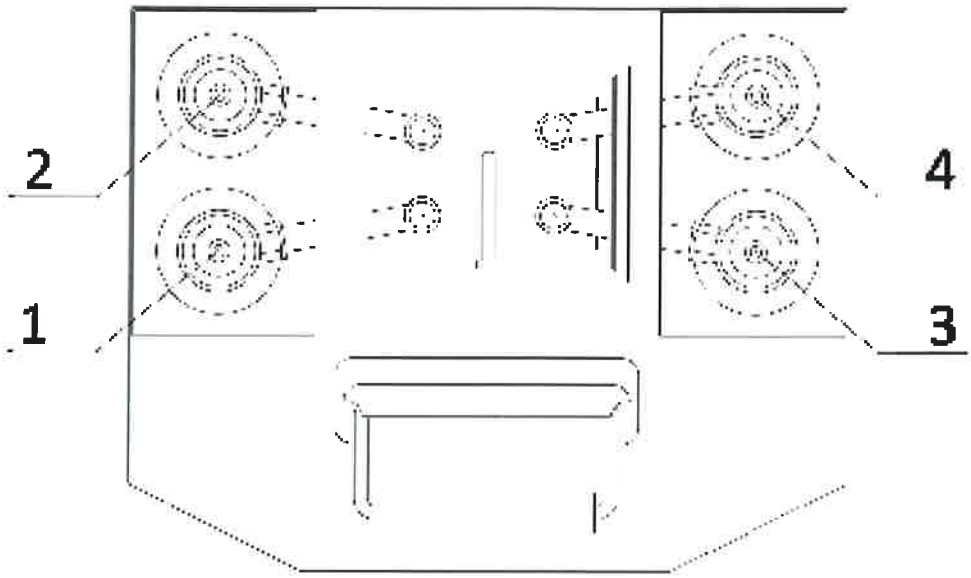

Figure 3: Salamander Quad Pro Canister Numbers

The display will show the DMX value received (0-255) on the fire channel. The HSI will be activated when the HSI channel is raised above 50% (128). At this point, a timer will activate, preventing the unit from being fired until the HSI has had time to reach full temperature. While the timer is active, the 3 digit display will flash. When the display stops flashing, *rdy* will be displayed. The unit is now ready to fire.

When a Fire channel is raised above 50%, a solenoid forces a plunger into the fuel canister, opening the canister valve and allowing the pressurised fluid to escape via the output nozzle located at the base of the flue.

It is recommended that the fire channel is activated with the 'flash' buttons present on most DMX controllers. This allows for greater control over the effect produced. A brief activation of the channel (0.5 – 1s) will produce a short-duration fireball effect. A longer activation will produce a tall 'tongue' of flame.

Any number of fire channels can be activated simultaneously. Firing multiple canisters at the same time will result in a taller, broader flame. Please see the maximum flame heights presented at the start of this manual for more information.

It is recommended that operators of the Salamander Quad Pro take some time to familiarise themselves with the effects produced in order to achieve the best results.

Warning: A firing solenoid should never be continuously activated for more than 30 seconds. Keeping a solenoid powered for extended periods risks damage to the solenoid coil.

Please note: After the Salamander Quad Pro has been fired, there can occasionally be seen a small flickering flame within the flue. This is produced by residual fuel in the nozzle vaporising after the Fire channel has been released. This is expected in normal operation, however, if the effect is not desirable, it can be minimised by gently warming the fuel canisters prior to use. This increases the volatility of the fuel, allowing it to vaporise more rapidly.

Set-Up

The Salamander Quad Pro is programmed for operation through the control panel (see above). This must be carried out with all DMX cables unplugged.

When powered up, *doF* will flash. This is short for DMX OFF.

Setting DMX Channels:

Press the SELECT button. The HSI indicator LED will light up, and the currently selected HSI channel will be displayed. Use the UP / DOWN buttons to cycle through DMX channels. When the desired channel is selected, press STORE / VIEW to save the setting.

Press SELECT again, and the FLAME indicator LED will light up. This is the first Fire channel. Select the desired channel and save it as above. Pressing SELECT again will return to the DMX status display.

Advanced Settings

tEC Menu

The Salamander Quad Pro's *tEC* menu can be accessed by pressing and holding STORE / VIEW and UP at the same time. *tEC* will be displayed, followed by the HSI delay value (*dXX*.) The fourth LED on the control panel (above the DOWN button) will be lit while in the tec menu (referred to from here on as the *tEC* LED.)

The first position in the *tEC* menu is the HSI delay setting. Press SELECT to access the other items in the menu: DMX Filter and Tilt Lock. Pressing SELECT a third time will return to the DMX Status Display.

HSI Delay

HSI Delay setting is indicated by the *tEC* and DMX LEDs.

dXX will be displayed, where *XX* is a value between 00 and 30. This value is the approximate HSI delay in seconds. It can be set to the nearest second by the UP and DOWN buttons, and saved by pressing STORE / VIEW. The default setting is 10 seconds.

Care should be taken when adjusting the HSI Delay. If it is set too short, the HSI might not have time to reach full temperature when the Salamander Quad Pro is fired. This can result in the fluid failing to ignite.

In addition, if the HSI Delay is reduced to 0, the HSI will not activate. This allows the firing system to be tested without the HSI active.

DMX Filter

DMX Filter is indicated by the *tEC* and HSI LEDs.

In order to minimise the possibility of incorrect triggering of the Salamander Quad Pro through DMX, the software contains a DMX data filter. This will cause a small delay in the unit's response to DMX commands (approximately 75ms.) In practical terms, this delay should be too short to have any effect on functionality, however it is possible to disable the DMX filter if this is desired.

Warning: If the Salamander Quad Pro is operated with the DMX filter disabled, the manufacturer will not be held responsible for any unexpected behaviour under DMX control.

The DMX filter has two settings: Filter ON (*F-1*) and Filter OFF (*F-0*)

Press UP to turn the filter ON, and DOWN to turn the filter OFF. This setting it stored automatically.

Tilt Switch

The Salamander Quad Pro contains a safety tilt switch that will disable the unit if it is tipped beyond 40 degrees from vertical. This will prevent the unit from operating should it be knocked over. It is [illegible] able this tilt-switch if desired.

Warning: The Salamander Quad Pro is only designed to be used in a vertical position. If the unit is to be used in any other position, it is the sole responsibility of the user to ensure safe operation.

The Tilt Lock has two settings: Tilt Lock ON (t-1) and Tilt Lock OFF (t-0)

Press UP to turn the Tilt Lock ON, and DOWN to turn the Tilt Lock OFF. This setting it stored automatically.

Troubleshooting

Problem	Cause	Action
Fuse or circuit breakers blowing when HSI activated	Too many Salamander Quad Pros on single supply	Assign HSIs different DMX channels and stagger activation
	Faulty HSI	Refer to Maintenance instructions / contact Le Maitre
	HSI element in contact with chassis	Return to correct position. HSI might need to be replaced.
HSI not heating	HSI Delay set to 0	Set HSI Delay to above 0 (10 is recommended) Refer to Set-Up Instructions.
	Incorrect DMX channel	Set to correct DMX channel. Refer to Set-Up
HSI stuck in heating delay (display constantly flashing)	HSI disconnected	Re-connect HSI. Refer to Maintenance instructions / contact Le Maitre.
Firing solenoid not activating	HSI still heating	Wait until HSI is fully heated. The display will stop flashing when the Salamander Quad Pro is ready to fire.
	Incorrect DMX channel	Set to correct DMX channel. Refer to Set-Up instructions.
Firing solenoid activating, but no gas released	Empty canister	Replace canister.
	Canister nozzle damaged	Replace canister.
	Firing pin sticking	Remove firing pin and clean or replace o-ring. Refer to Maintenance instructions.
	Firing pin too low.	Increase firing pin height. Refer to Maintenance instructions.
Gas released, but failing to ignite	Cans too cold.	Warm cans with hot air or a water bath before use. Approx. 30°C is recommended.
	Insufficient air-flow.	Raise the unit from the ground by increasing the height of the adjustable feet.
No response from unit	Tilt lock-out engaged	Position on a level surface and turn unit off and on again.
	DMX signal not received	Check DMX controller and test cables.
Gas leaking when canister is installed	Firing pin too high.	Reduce firing pin height. Refer to Maintenance instructions.

Maintenance

Please note: While the Salamander Quad Pro contains several components that have been designed to be user-serviceable, the maintenance procedures described in this section should only be performed by qualified personnel. The manufacturer cannot be held responsible for events occuring due to incorrect maintenance of this machine.

Please note: All the procedures described in this section should be performed with the Salamander Quad Pro isolated from any power supply, after the unit has been allowed to cool for at least 10 minutes.

The Salamander Quad Pro features two service panels secured by 4xM4 bolts. Removal of these service panels allows access to the majority of user-serviceable components within the Salamander Quad Pro:

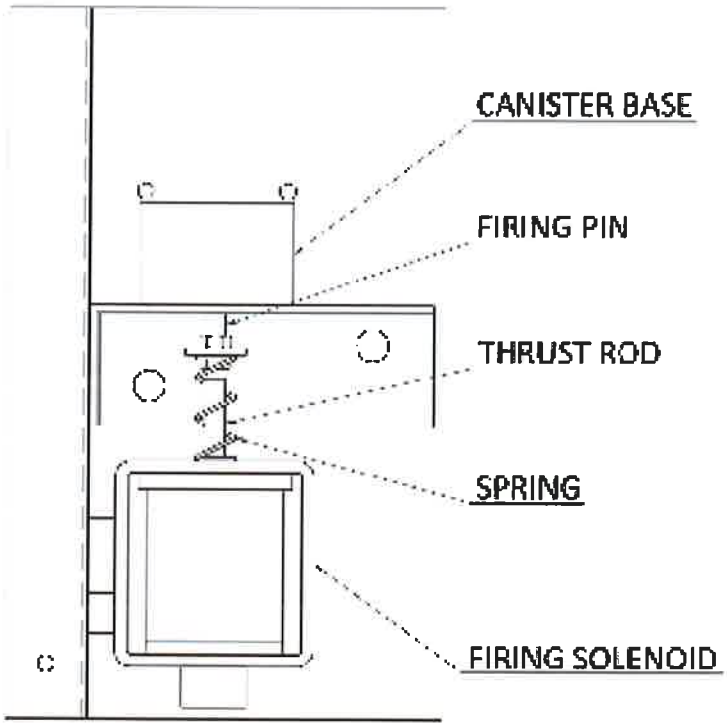

Figure 4: Salamander Quad Pro Firing Mechanism

Firing Pin Adjustment

While the firing solenoid is not active, the firing pin should not protrude above the top surface of the canister base:

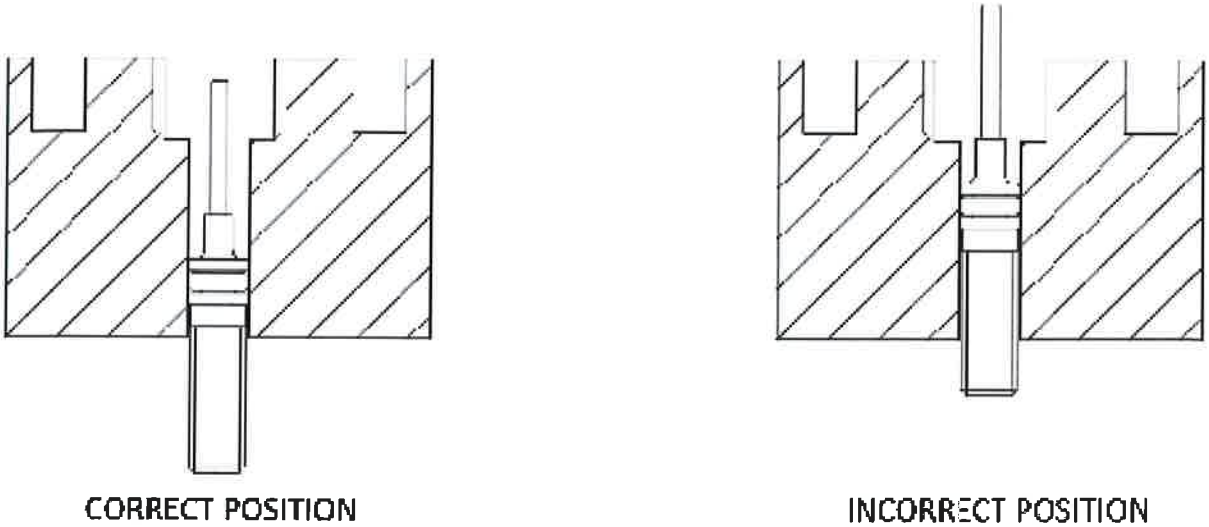

Figure 5: Correct and Incorrect firing pin positions

If the pin protrudes above the top surface of the canister base, this might lead to the pin opening the canister valve as a canister is installed, causing gas to be released.

The relaxed position of the firing pin can be changed by adjusting the position of the two M5 plain nuts and the washer on the firing pin shaft. Winding this assembly further up the pin will reduce the height of the pin while it is in a relaxed state.

To perform this adjustment:

1. Depress the spring.
2. Using a 8mm spanner, wind the nuts up the firing pin shaft one at a time.
3. When the pin is in the desired position, tighten both nuts against the washer.

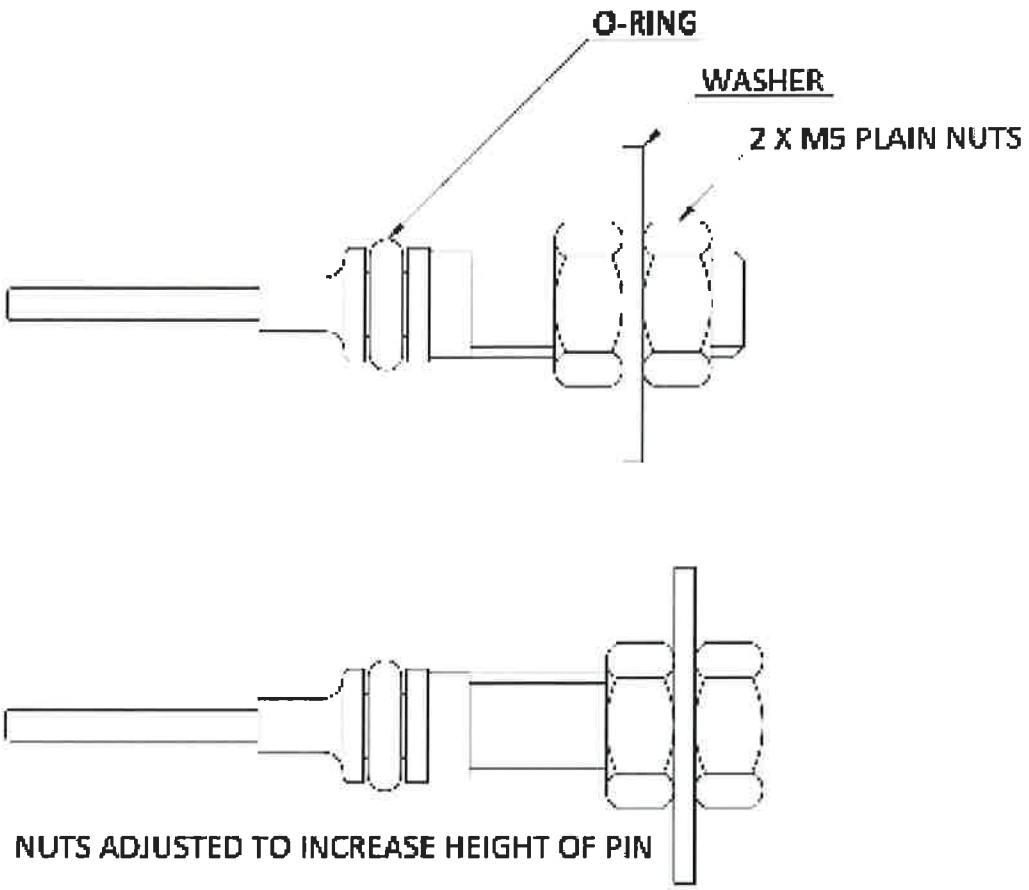

Figure 6: Firing pin assembly and adjustment

O-Ring Replacement

The Salamander Quad Pro contains two user-replaceable O-rings in each canister base.

One is located at the base of the thread in the brass canister base.

The other is located on the firing pin.

The canister base O-ring should be inspected every time the canister is changed. If the rubber appears worn, frayed or split, the O-ring should immediately be replaced. It might be necessary to cut the O-ring out of the canister base using a small blade such as a scalpel.

The replacement O-ring can simply be pressed into place.

It is recommended that the firing pin O-ring is periodically examined for damage. Checking the O-ring every 6-12 canisters is usually appropriate, however this will vary based on the precise operating conditions of the unit.

In addition, if the Salamander Quad Pro fails to fire correctly, or the response when firing is delayed or 'sticky', the firing pin O-ring must be cleaned or replaced.

To remove the firing pin O-ring:

1. Remove the rubber plug from the base of the Salamander Quad Pro.
2. Remove the thrust rod from the solenoid by sliding it out the base of the unit, through the un-plugged hole.
3. Remove the spring from the firing mechanism.
4. The firing pin can now be removed from the bottom of the brass base.

If the O-ring appears worn, frayed or split it must be replaced. The O-ring should be cut off the firing pin with a sharp blade such as a scalpel, taking care not to scratch the firing pin itself. A new O-ring should be eased into place from the top end of the pin. Do not push the O-ring over the thread on the firing pin.

A chemically inert lubricant such as general purpose silicone grease must be applied to the O-ring before the pin is replaced. A thin layer should be applied to the O-ring, and any excess should be wiped away.

When the O-ring has been replaced, re-install the firing pin.

Please note: Under no condition should the firing pin be pushed up out of the top if the canister base. This will force the firing pin O-ring across the canister base's side opening, damaging the rubber and compromising the seal created.

Please note: If the Salamander Quad Pro is to be operated exclusively with coloured fluid (Red or Green) the pin O-ring must be inspected after at most 12 canisters per base.

Warning: Failure to apply lubricant to the O-ring may result in the pin sticking. This can lead to a delay in firing or shutting off, and reduce the life of the O-ring.

Contact Details

UK:

Le Maître Ltd
6 Farval Close
Wandle Way
Mitcham
Surrey
CR4 4NE

Tel: +44 (0)20 8646 2222
Fax: +44 (0)20 8646 1955

Email: info@lemaitreltd.com

USA:

Le Maître USA, LLC

Mailing Address:

PO Box 365077
Las Vegas, NV 89036
USA

Shipping Address:

13975 Grand Valley Parkway
Las Vegas, NV 89165
USA

Tel: +1 (702)-843-5080
Fax: +1 (702)-843-5070

Email: info@lemaitreusa.com

Warranty

The Le Maître Salamander Quad Pro is sold with a one year's warranty, which includes parts and labour from the date of purchase. This warranty covers manufacturing defects, providing that the unit has been regularly serviced by an authorized agent and has only used genuine Le Maître Canisters.

Le Maître Ltd considers all of its products to be safe for use in the application it was intended. Le Maître Ltd takes no responsibility for misuse or incorrect use. Always refer to the equipment owner's manual for proper use, and be aware of local legislation governing the products use.

Le Maître Ltd
6 Forval Close, Wandle Way
Mitcham, Surrey
CR4 4NE

Le Maître is a registered trademark of Le Maître Ltd

Safety Data Sheet
according to 1907/2006/EC, Article 31

Printing date 12/23/2010 Revision date 12/23/2010

* 1 Identification of the substance/preparation and of the company/undertaking

- Product details
- Trade name: CHAMELEON FLAME 500 ML
- Article number: GS0007
- Application of the substance / the preparation Cleaning agent/ Cleaner
-

La Maitre Ltd.
UK +44 (0) 20 8646 2222
USA 1 (512) 451-4392

* 2 Hazards identification

- Hazard description:

F+ Extremely flammable

- Information concerning particular hazards for human and environment:
The product has to be labelled due to the calculation procedure of the "General Classification guideline for preparations of the EU" in the latest valid version.
Warning! Pressurized container.
R 12 Extremely flammable.
Pressurized container: protect from sunlight and do not expose to temperatures exceeding 50°C. Do not pierce or burn, even after use.
Do not spray on a naked flame or any incandescent material. Keep away from sources of ignition – No smoking.
Keep out of the reach of children
- Classification system:
The classification is according to the latest editions of the EU-lists, and extended by company and literature data.
- GHS label elements

Danger

2.3/1 – Extremely flammable aerosol.
- Prevention:
Keep away from heat/sparks/open flames/hot surfaces. – No smoking.
Do not spray on an open flame or other ignition source.
Pressurized container: Do not pierce or burn, even after use.
- Storage:
Protect from sunlight. Do no expose to temperatures exceeding 50°C/ 122°F.

(Contd. on page 2)

Safety Data Sheet
according to 1907/2006/EC, Article 31

Printing date 12/23/2010 — Revision date 12/23/2010

Trade name: CHAMELEON FLAME 500 ML

(Contd. of page 1)

* 3 Composition/information on ingredients

- Chemical characterization
- Description: Mixture of substances listed below with nonhazardous additions.

- Dangerous components:

CAS: 74-98-6 EINECS: 200-827-9	propane	F+; R 12 Danger: 2.2/1 Warning: 2.5/L	25-50%
CAS: 106-97-8 EINECS: 203-448-7	butane	F+; R 12 Danger: 2.2/1 Warning: 2.5/L	25-50%
CAS: 75-28-5 EINECS: 200-857-2	isobutane	F+; R 12 Danger: 2.2/1 Warning: 2.5/L	25-50%

- Additional information: For the wording of the listed risk phrases refer to section 16.

* 4 First-aid measures

- After inhalation: Supply fresh air; consult doctor in case of complaints.
- After skin contact: Generally the product does not irritate the skin.
- After eye contact: Rinse opened eye for several minutes under running water. Then consult a doctor.
- After swallowing: Drink plenty of water and provide fresh air. Call for a doctor immediately.

5 Fire-fighting measures

- Suitable extinguishing agents:
  CO2, powder or water spray. Fight larger fires with water spray or alcohol resistant foam.
- For safety reasons unsuitable extinguishing agents: Water with full jet
- Protective equipment: No special measures required.

* 6 Accidental release measures

- Person-related safety precautions: Ensure adequate ventilation
- Measures for environmental protection:
  Do not allow product to reach sewage system or any water course.
  Inform respective authorities in case of seepage into water course or sewage system.
- Measures for cleaning/collecting: Ensure adequate ventilation.

* 7 Handling and storage

- Handling:
- Information for safe handling:
  No special measures required.
  Ensure good ventilation/exhaustion at the workplace.
  Open and handle receptacle with care.
- Information about fire - and explosion protection:
  Do not spray onto a naked flame or any incandescent material.
  Keep ignition sources away - Do not smoke.
  Protect against electrostatic charges.
  Pressurized container: protect from sunlight and do not expose to temperatures exceeding 50°C, i.e. electric lights. Do not pierce or burn, even after use.

(Contd. on page 3)

Safety Data Sheet
according to 1907/2006/EC, Article 31

Printing date 12/23/2010 Revision date 12/23/2010

Trade name: CHAMELEON FLAME 500 ML

(Contd. of page 2)

- Storage:
- Requirements to be met by storerooms and receptacles:
Store in a cool location.
Observe official regulations on storing packagings with pressurized containers.
- Information about storage in one common storage facility: Not required.
- Further information about storage conditions:
Keep container tightly sealed.
Do not seal receptacle gas tight.
Store in cool, dry conditions in well sealed receptacles.
Protect from heat and direct sunlight.

*

8 Exposure controls/personal protection

- Additional information about design of technical facilities: No further data; see item 7.

- Ingredients with limit values that require monitoring at the workplace:	
106-97-8 butane	
WEL	Short-term value: 1810 mg/m³, 750 ppm Long-term value: 1450 mg/m³, 600 ppm Carc (if more than 0.1% of buta-1,3-diene)

- Additional information: The lists valid during the making were used as basis.

- Personal protective equipment:
- General protective and hygienic measures:
Wash hands before breaks and at the end of work.
Do not inhale gases / fumes / aerosols.
- Respiratory protection: Not required.
- Protection of hands: Not required.
- Material of gloves Not required.
- Penetration time of glove material Not required.
- Eye protection: Not required.

*

9 Physical and chemical properties

- General Information	
Form:	Aerosol
Colour:	According to product specification
Odour:	Characteristic
- Change in condition	
Melting point/Melting range:	Undetermined.
Boiling point/Boiling range:	Not applicable, as aerosol.
- Flash point:	< 0°C (< 32°F) Not applicable, as aerosol.
- Ignition temperature:	365°C (689°F)
- Self-igniting:	Product is not selfigniting.
- Danger of explosion:	Product is not explosive. However, formation of explosive air/vapour mixtures are possible.
- Explosion limits:	
Lower:	1.5 Vol %
Upper:	10.9 Vol %
- Vapour pressure at 20°C (68°F):	3500 hPa (2625 mm Hg)

(Contd. on page 4)

Safety Data Sheet
according to 1907/2006/EC, Article 31

Printing date 12/23/2010 Revision date 12/23/2010

Trade name: CHAMELEON FLAME 500 ML

(Contd. of page 3)

· Density at 20°C (68°F):	0.56 g/cm³
· Solubility in / Miscibility with water:	Not miscible or difficult to mix.
· Solvent content:	
Organic solvents:	100.0 %
· EU-VOC:	560.0 g/l
· EU-VOC in %:	100.00 %

10 Stability and reactivity

· Thermal decomposition / conditions to be avoided: No decomposition if used according to specifications.
· Dangerous reactions No dangerous reactions known.
· Dangerous decomposition products: No dangerous decomposition products known.

* 11 Toxicological information

· Acute toxicity:

· LD/LC50 values relevant for classification:	
106-97-8 butane	
LC50 / 4 h	658 mg/m3 (rat)

· Primary irritant effect:
· on the skin: No irritant effect.
· on the eye: No irritating effect.
· Sensitization: No sensitizing effects known.

* 12 Ecological information

· General notes: Generally not hazardous for water

* 13 Disposal considerations

· Product:
· Recommendation
Must not be disposed together with household garbage. Do not allow product to reach sewage system.

· European waste catalogue	
20 01 13	solvents
15 01 04	metallic packaging

· Uncleaned packaging:
· Recommendation: Disposal must be made according to official regulations.

(Contd. on page 9)

Safety Data Sheet
according to 1907/2006/EC, Article 31

Printing date 12/23/2010 Printing date 12/23/2010

Trade name: CHAMELEON FLAME 500 ML

(Contd. of page 4)

* 14 Transport information

· Land transport ADR/RID (cross-border)

· ADR/RID class: 2 5F Gases.
· Danger code (Kemler): –
· UN-Number: 1950
· Packaging group: –
· Hazard label 2.1
· Description of goods: 1950 AEROSOLS
· Limited quantities (LQ) LQ2
· Transport category 2
· Tunnel restriction code 1D

· Maritime transport IMDG:

· IMDG Class: 2.1
· UN Number: 1950
· Label 2.1
· Packaging group: –
· EMS Number: F-D,S-U
· Marine pollutant: No
· Proper shipping name: AEROSOLS

· Air transport ICAO-TI and IATA-DGR:

· ICAO/IATA Class: 2.1
· UN/ID Number: 1950
· Label 2.1
· Packaging group: –
· Proper shipping name: AEROSOLS, flammable

· UN "Model Regulation": UN1950, AEROSOLS, 2.1

* 15 Regulatory information

· Labelling according to EU guidelines:
The product has been classified and marked in accordance with EU Directives / Ordinance on Hazardous Materials.

· Code letter and hazard designation of product:

F+ Extremely flammable

[illegible]

flammable.

Safety Data Sheet
according to 1907/2006/EC, Article 31

Printing date 12/23/2010 Revision date 12/23/2010

Trade name: CHAMELEON FLAME 500 ML

(Contd. of page 9)

- Safety phrases:
  - 2 Keep out of the reach of children.
  - 23 Do not breathe aerosol.
  - 26 In case of contact with eyes, rinse immediately with plenty of water and seek medical advice.
  - 29/56 Do not empty into drains; dispose of this material and its container at hazardous or special waste collection point.
  - 46 If swallowed, seek medical advice immediately and show this container or label.
  - 51 Use only in well-ventilated areas.
- Special labelling of certain preparations:
  Pressurized container: protect from sunlight and do not expose to temperatures exceeding 50°C. Do not pierce or burn, even after use.
  Do not spray on a naked flame or any incandescent material. Keep away from sources of ignition – No smoking.
  Keep out of the reach of children

* 16 Other information

This information is based on our present knowledge. However, this shall not constitute a guarantee for any specific product features and shall not establish a legally valid contractual relationship.

- Relevant R-phrases
  12 Extremely flammable.
-
-
- Abbreviations and acronyms:
  ADR: Accord européen sur le transport des marchandises dangereuses par Route (European Agreement concerning the International Carriage of Dangerous Goods by Road)
  RID: Règlement international concernant le transport des marchandises dangereuses par chemin de fer (Regulations Concerning the International Transport of Dangerous Goods by Rail)
  IMDG: International Maritime Code for Dangerous Goods
  IATA: International Air Transport Association
  IATA-DGR: Dangerous Goods Regulations by the "International Air Transport Association" (IATA)
  ICAO: International Civil Aviation Organization
  ICAO-TI: Technical Instructions by the "International Civil Aviation Organization" (ICAO)
  GHS: Globally Harmonized System of Classification and Labelling of Chemicals
  LC50: Lethal concentration, 50 percent
  LD50: Lethal dose, 50 percent
- * Data compared to the previous version altered.

PYROTECHNIC INFO & SDS

STAGE FX

INFORMATION ON EQUIPMENT AND SAFETY DATA SHEETS (SDS) FOR THE PYROTECHNIC MATERIAL(S) TO BE USED

184 McNaley Road
Columbus, MT 59019
(406)322-1303

Next FX, Inc.
SAFETY DATA SHEET

Falls, Type 1, 2, 3 & 3A – (All colors)

SECTION I: PRODUCT & MANUFACTURER IDENTIFICATION

Product Identifier **Falls Type(s) 1, 2, 3 & 3A, Droopy Gerbs**		
Product Use; **Theatrical Pyrotechnics and Special Effects. Device will expel burning projections and will continue to burn for a short duration.**		
Manufacturers Name; **Distributed By: Next FX, Inc.** **Mfg. By: Stage FX, Inc.**		
Street Address; **184 McNaley Road**	City; **Columbus**	State **MT – USA**
Zip Code; **59019**	Telephone Number; [redacted]	Emergency Numbers; [redacted]

SECTION II: HAZARDS IDENTIFICATION

WHMIS Classification/GHS Classification: Explosive Class 1.4

WARNING

Hazard statement: **Fire or Projection Hazard**

Precautionary Statements:

Prevention;

Keep away from heat/sparks/open flames/hot surfaces/stray electrical currents – "No Smoking"

Response;

In case of fire: Evacuate area
Explosion risk in case of fire
Do NOT fight fire when fire has reached explosive product.

Product Use:

Burning projections can and will ignite combustible materials. Height & radial safety distances should be applied. Refer to label or manufacturer for appropriate safety distances for specific product. "FOR PROFESSIONAL USE ONLY" not for consumer or retail sales.

Sales to persons under (18) years prohibited.

Potential Acute Health Effects:

Device could cause serious burn injuries if incorrectly used.

Rev. A Dated: 13 November 2017

184 McNaley Road
Columbus, MT 59019
(406)322-1303

Next FX, Inc.
SAFETY DATA SHEET

Falls, Type 1, 2, 3 & 3A – (All colors)

Potential Chronic Health Effects:
There are no chronic affects from handling this product appropriately. See appropriate SDS for component ingredients.

National Fire Protection Association Ratings;
Health Hazard – 1 Flammability – 3 Reactivity – 0 Special – 0

SECTION III: COMPOSITION/INGREDIENT INFORMATION

Hazardous Ingredients	%	CAS Number
Potassium Perchlorate	*	7778-74-7
Charcoal	*	7440-44-0
Sodium Benzoate	*	532-32-1
Dicyandiamide	*	125148-58-5
Sodium Bicarbonate	*	144-55-8
Potassium Nitrate	*	7757-79-1
Sulfur	*	7704-34-9
Titanium	*	7440-32-6
Stearic Acid	*	57-11-4
Black Copper Oxide	*	1317-38-0
Red Gum	*	
Ammonium Perchlorate	*	7790-98-9
Strontium Nitrate	*	10042-76-9
Dextrine	*	9004-53-9

* Ingredient percentages are company proprietary.

SECTION IV: FIRST AID MEASURES

Routes of Entry; X Skin contact – Skin Absorption X eye contact X Inhalation X Ingestion

Skin contact;
Product itself does not have any skin contact hazards. Serious burns could take place if accidental ignition. Contents (if spilled) should be washed immediately from exposed area with plenty of soap and water.

Eye contact;
Product itself does not have any eye contact hazards. Serious eye injuries could result if accidental ignition occurs. (If Contents are spilled) Flush eyes for a minimum of 15 minutes. If irritation persists, seek medical attention.

Inhalation;
Product itself does not present an inhalation hazard. Smoke from device functioning may cause irritation if used within non-ventilated or small confined spaces.

184 McNaley Road
Columbus, MT 59019
(406)322-1303

Next FX, Inc.
SAFETY DATA SHEET

Falls, Type 1, 2, 3 & 3A – (All colors)

Ingestion; Product itself does not present an ingestion hazard. If contents are accidentally ingested, seek medical attention as soon as possible.
Acute Health Effects; Some ingredients are considered irritants and should be handled as such if exposed.
Chronic Health Effects; There are no chronic affects from the handling of this product.

SECTION V: FIRE FIGHTING MEASURES & RELATED INFORMATION

Flammability;	NFPA Rating;
All Pyrotechnics are highly flammable	4 – Severe Hazard
General Fire hazards; Pyrotechnic compositions/devices burn violently and are self-oxidized. Faster burning compositions may reach detonation levels dependent upon composition, packaged configuration and/or containment.	
Means of Extinguishment; Pyrotechnics are self-oxidized and cannot be extinguished with normal means. Do not fight fires involving the devices. Incipient fires may be fought. Do not use suffocation methods, clear area of personnel!	

SECTION VI: ACCIDENTAL RELEASE MEASURES

Containment Procedures; Devices may be gently picked up and re-packaged in original packaging or equivalent. In case pyrotechnic composition is spilled: Keep away from any possible ignition sources such as open flames, sparks and non-rated electrical devices. Prevent possible electrostatic discharges (for example: do not use a synthetic dustpan and brush).
Clean-Up Procedures; Packaged devices can be picked up gently. For spilled material, which may be released accidentally, flood area with water and use conductive or natural material utensils for pick-up. place into a closed conductive container for disposal.

SECTION VII: HANDLING AND STORAGE

Handling Procedures and equipment; All pyrotechnics should be handled with caution. Avoid open flames, smoking, friction, impact, excessive heat, electrostatic discharges, radio frequency interference and moisture, (humidity). Items are meant to be used in water. Safety instructions included in packaging. In some cases, unpackaged or explosive/pyrotechnic materials packaged in other then original packaging may have to be handled as a higher hazard. i.e. 1.1 or 1.3 classification.

184 McNaley Road
Columbus, MT 59019
(406)322-1303

Next FX, Inc.
SAFETY DATA SHEET

Falls, Type 1, 2, 3 & 3A – (All colors)

Storage Requirements;
Store in a cool, well ventilated, and dry area. Dependent upon application, separation distances and security measures are to be complied with. Storage compatibility should be maintained in accordance with Federal regulations.

SECTION VIII: EXPOSURE CONTROL/PERSONAL PROTECTION

Exposure Limits:	ACGIH TLV = N/A	OSHA PEL = N/A	OTHER = N/A
Engineering Controls; Devices need to be used in a ventilated area for removal of smoke. Some ingredients may have exposure controls but are relegated to manufacturing processes only. Devices expel burning incandescent material that should be designed to fall upon flame resistant material or surface.			
Personal Protective equipment; Safety glasses are required when handling. Prevention or reduction of Static electricity should be accomplished by wearing all cotton clothing.			

SECTION IX: PHYSICAL PROPERTIES

Physical state; Solid	Odor & Appearance; Normally Black Tube – No odor	Specific Gravity; N/A
Odor Threshold; N/A	Viscosity; N/A	Partition Coefficient; (n-Octonal/Water) N/A
Vapor Density; (Air=1) N/A	Vapor Pressure; (mm/Hg) N/A	Evaporation Rate; N/A
Boiling Point; (° C) N/A	Freezing Point; (° C) N/A	pH; N/A
Solubility in Water; N/A	Melting Point; Pyrotechnics will reach auto-ignition temperature before melting	VOC; N/A
Flashpoint; N/A	Upper Flammable Limits; N/A	Lower Flammable Limits; N/A
Auto-Ignition Temperature; Approx. – 440° C	Sensitivity to Impact; N/A	Sensitivity to Electrostatic; Only when device is un-shunted.

SECTION X: STABILITY & REACTIVITY

Chemical Stability;	If Unstable, Under what Conditions;
X Stable Unstable	

184 McNaley Road
Columbus, MT 59019
(406)322-1303

Next FX, Inc.
SAFETY DATA SHEET

Falls, Type 1, 2, 3 & 3A – (All colors)

Incompatibilities or Conditions to Avoid; Ignition Sources.	
Possibility of Hazardous Reaction; Very low when device is shunted or short circuited. Low possibility when un-shunted.	
Reactivity; Loose composition is very reactive to sources of ignition.	
Hazardous Decomposition; Decomposition does not occur under normal circumstances during storage, transport and handling. Upon functioning, this device can produce Nitrates and other oxides.	

SECTION XI: TOXICOLOGICAL INFORMATION

Carcinogenicity – IARC; These devices may contain known or suspected carcinogens. The following list of chemicals are classifiable and you should refer to specific SDS for additional information;	Carcinogenicity – ACGIH; These devices may contain known or suspected carcinogens. The following list of chemicals are classifiable and you should refer to specific SDS for additional information;
Routes of Entry; (Only Spilled Compositions) Inhalation & Ingestion	
Measures of Toxicity; (Ingredients Only) Potassium Nitrate – (Oral), LD50 (Rat) 3015 mg/kg Sulfur – (Inhalation), LC50 (Rat) >9.23 mg/L/4H, (Oral), LD50 (Rat) >3000 mg/kg: (Dermal), LD50 (Rabbit)>2000 mg/kg Sodium Benzoate – (Oral), LD50 – (Rat) 2100 mg/kg Sodium Bicarbonate – (Oral), LD50 – (Rat) 4220 mg/kg Charcoal – (Oral), LD50 (Rat) >10,000 mg/kg Ammonium Perchlorate – (Oral), LD50 (rat) 4200 mg/kg Strontium Nitrate – (Oral), LD50 (Rat) 1892 mg/kg Stearic Acid – (Oral), LD50 (Rat) 4640 mg/kg, (Dermal), LD50 (Rabbit) >5000 mg/kg	
Chronic Effects on Humans; (Ingredients Only) (See Ingredient SDS)	Acute Effects on Humans; (Ingredients Only) (See Ingredient SDS)
Other toxic Effects On Humans; (Skin Corrosion/Irritation, Eye Damage/Irritation, Respiratory or Skin Sensitizer, or Aspiration Hazards) N/A	
Germ Cell Mutagenicity; N/A	Reproductive Toxicity; N/A
STOT – Single Exposure; N/A	STOT – Repeated Exposure; N/A
Symptoms of Overexposure; No overexposure hazards associated with the device or product.	

184 McNaley Road
Columbus, MT 59019
(406)322-1303

Next FX, Inc.
SAFETY DATA SHEET

Falls, Type 1, 2, 3 & 3A – (All colors)
SECTION XII: ECOLOGICAL INFORMATION

Ecotoxicity; The following list of chemicals may have additional ecotoxicity information on their specific SDS; Sulfur Sodium Benzoate Sodium Bicarbonate	BOD5 & COD; Not Available
Products of Degradation; Possibly hazardous short term, degradation products are not likely.	
Toxicity of the Products of Biodegradation: The products of degradation are less toxic than the product itself.	
Other Adverse Affects; Not Available	
Bioaccumulation: N/A	Mobility in Soil; N/A

SECTION XIII: DISPOSAL CONSIDERATIONS:

Epa Waste Codes Applicable; Unused devices will exhibit the characteristics of reactivity in accordance with 40 CFR. D003 would be applicable if devices are considered waste.
Waste disposal; Wastes must be disposed of in accordance with Local, State and Federal regulations. As stated above, unused device does exhibit a RCRA characteristic as depicted by 40 CFR and/or other international regulations. Best suited for incineration at a licensed experienced disposal facility. Used devices may be disposed of in standard refuse container.

SECTION XIV: TRANSPORTATION INFORMATION

Dot Classification & UN Identification; **Class 1.4G – UN0431** **Explosive**	Proper Shipping Name & Technical Name; **Articles, Pyrotechnic**
Special Provisions for Transport; In case of an accident, the ERG should be consulted for emergency procedures. Evacuation will be necessary if accident has involved multiple devices in a fire or the potential for a fire exists.	

184 McNaley Road
Columbus, MT 59019
(406)322-1303

Next FX, Inc.
SAFETY DATA SHEET

Falls, Type 1, 2, 3 & 3A – (All colors)
SECTION XV: REGULATORY INFORMATION:

Federal & State Regulations; Regulations governing the manufacturing, use and sale of pyrotechnics and/or chemicals are applicable to this product line. Please contact your distributor or the manufacturer for specific regulations if you have questions.
Other Regulations; OSHA: Hazardous by definition of Hazard Communication Standard (29 CFR 1910.1200). EINECS: Some of the compositional ingredients are on the European Inventory of Existing Commercial Chemical Substances. Ingredients may have specific Federal, State or local regulations governing thresholds and handling procedures and only apply to the manufacturing of these items. If one of the ingredients in these devices is Potassium Perchlorate, the state of California requires that this warning be given – "Some products may contain Perchlorates. Special Handling may apply! See www.dtsc.ca.gov/hazardouswaste/perchlorate."

SECTION XVI: OTHER INFORMATION

The information above is believed to be accurate and represents the best information currently available to us. However, we make no warranty of merchantability or any other warranty, expressed or implied, with respect to such information, and we assume no liability resulting from its use. Users should make their own investigations to determine the suitability of the information for their particular purposes. In no event shall Next FX, Inc. or its affiliates be liable for any claims, losses, or damages of any third party or for lost profits or any special, indirect, incidental, consequential or exemplary damages, howsoever arising, even if Next FX, Inc. Affiliates or Consultants have been advised of the possibility of such damages.

Date Prepared;	Prepared By;	Telephone Number;
18 Sept. 2013	Dennis Slicer	[redacted]

OTHER INFO & SDS

STAGE FX

INFORMATION ON EQUIPMENT AND SAFETY DATA SHEETS (SDS) FOR THE PYROTECHNIC MATERIAL(S) TO BE USED

CLUBCANNON

PRO JET

User Manual

VERSION 1.1
JUN 2023

TABLE OF CONTENTS

PRO JET INTRO 1
OVERVIEW 1
FEATURES 1
INCLUDED ITEMS 2
SAFETY GUIDE 3-5
SAFETY RADIUS 4
SAFE MOUNTING 5
HARDWARE OVERVIEW 6
UNIT REAR 6
HARDWARE SPECIFICATIONS 7
CO_2 REQUIREMENTS 8
CO_2 SETUP 9
QUICK START DMX GUIDE 10
HOME SCREEN 11
DMX ADDRESSING 11
PURGE LINES 12
CO2 PASSTHROUGH 13
SETUP EXAMPLES 13
DEVICE TROUBLESHOOTING 14
INCLUDED WARRANTY 15
TERMS & CONDITIONS 16
CONTACT US 17

PRO JET INTRO

Congratulations on your purchase of the Pro Jet! This manual will provide an overview of the Pro Jet's functions, capabilities, and instructions for proper operation. If you have questions outside the scope of this manual, feel free to contact us directly.

OVERVIEW

The Club Cannon Pro Jet is a power CO_2 jet that produces 25-30FT plumes of ice cold fog, using liquid CO2. It is great for DJ's, Touring acts, performers, nightclubs, DJ booths, sporting events, field entrances, theatre productions, weddings, special events and more.

The Pro Jet includes on board DMX control with RDM functionality, CO2 passthrough, and a purge lines feature.

The Pro Jet requires a Siphon CO_2 tank to operate properly. Due to the volume of CO_2 expelled, the Pro Jet is only meant to be used in well ventilated spaces.

The CO2 Passthrough feature will allow you to link multiple units together, streamlining the required hose runs. This feature also provides even pressure to each unit in the chain, so all tanks drain equally. Additional info about CO2 passthrough is outlined later in this manual.

FEATURES

- Up to 30' Output
- Truss Mountable
- DMX Controlled
- Ventilated Barrel
- Purge Lines Feature
- 1CH Operation
- Integrated Muffler
- LED Display
- Neutrik True1 Input
- Neutrik True1 Output
- Quick Connect Input
- CO2 Passthrough

NOTICE

Necessary precautions should be taken when using FX products to ensure the safety of the operator, crew, and audience.

Do not operate this product, or any special effects product without proper knowledge and training. Never operate Special Effects Equipment under the influence of drugs or alcohol.

INCLUDED **ITEMS**

The following items are included with the purchase of each Pro Jet. If you need replacement items, contact Club Cannon, 888-804-8175 / info@clubcannon.com.

PRO JET

DMX Controlled CO2 Jet

TRUE1 CABLE

6' Edison to True1 cord

CO_2 TERMINATOR

Install on unused quick connect

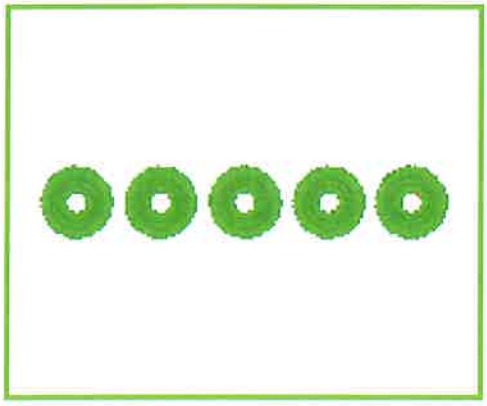

5 - CO_2 WASHERS

Seals the connection between your CO_2 hose and CO_2 tank

CO_2 ATTACHMENT TOOL

Used to tighten the CGA-320 fitting to your CO_2 tank

CO_2 HOSE

CGA-320 x Quick Connect

SAFETY GUIDE

DANGER
This icon signifies that severe bodily harm or death *will* occur if instructions are not followed.

WARNING
This icon signifies that severe bodily harm or death *may* occur if instructions are not followed.

NOTICE
This icon signifies that mild to moderate injury may occur if instructions are not followed.

CAUTION
This icon signifies product malfunction or damage may occur if instructions are not followed.

To ensure safe operation, user must follow instructions closely. Necessary protocols should be followed when handling and operating Special Effects Equipment and their respective consumables.

- **Never place objects of any kind inside barrels.**
- **Never aim or fire the products at any person or living thing.**
- **This product is meant to be used only in well-ventilated areas.**

When using the products, always follow the safety radius displayed in this manual.

Once the product is attached to the CO_2 tanks and the tanks are turned on, the product, hoses and fittings will be under high pressure. Do not disconnect any fittings or hoses until the tank has been turned off, and the remaining gas has been cleared through the product, depleting all pressure in the system. If a leak is detected, cease use of the product immediately. Never stand directly over unit while under pressure. Jets should be mounted or fixed in a safe place. When using Jets above ground, always use a safety cable in the event the Product's mount or fixture should fail. You must supply the safety cable(s) to use with this product. If you are under 18, you should not be using this product.

PREVENTING SERIOUS INJURY OR DEATH

CO_2 Special Effects are to only to be used in well ventilated areas. Failure to do so may result in oxygen displacement.

Maintain a safe distance between Special Effects Products and audience, crew & event staff. Refer to the safety radius outlined in this manual.

Never aim Special Effects Products directly at any person or living thing.

Always fasten tanks to avoid tipping, rocking, or being tampered with. When feasible, keep tanks out of direct sunlight.

Check with officials in local jurisdiction for any permit requirements before operating Special Effects.

WARNING

Carbon dioxide is known as an asphyxiant gas. Carbon dioxide poisoning has been linked to various health issues, including central nervous system damage, permanent deterioration of respiratory functions, suffocation or even death. If you have any health concerns that may be related to the Product's use of carbon dioxide, consult your doctor before using any of the Products.

- CO_2 Levels can be measured using a CO_2 Monitor.
- 5,000 PPM is the workplace exposure limit in most jurisdictions.
- Check with your local agency to verify any need for permits in your area.

SAFETY RADIUS

The Pro Jet can produce a plume of fog upwards of 30FT/9M. Images below outline the necessary safety radius, which must be observed at all times.

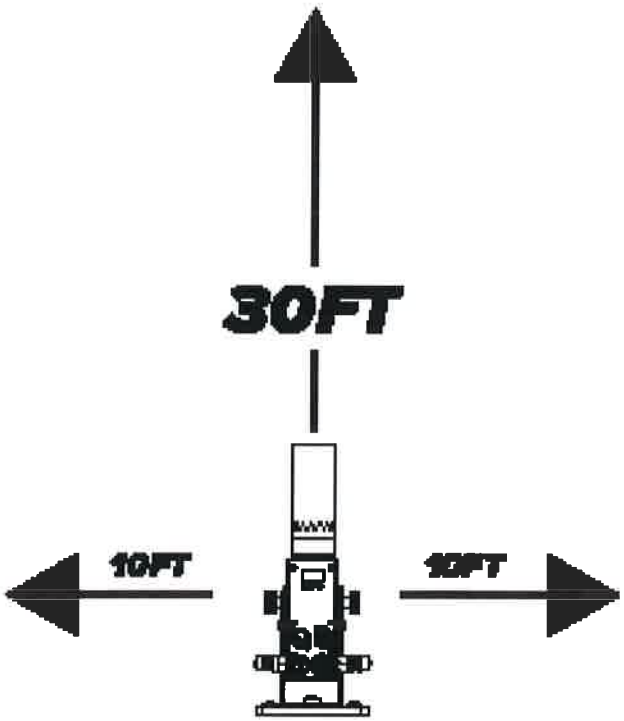

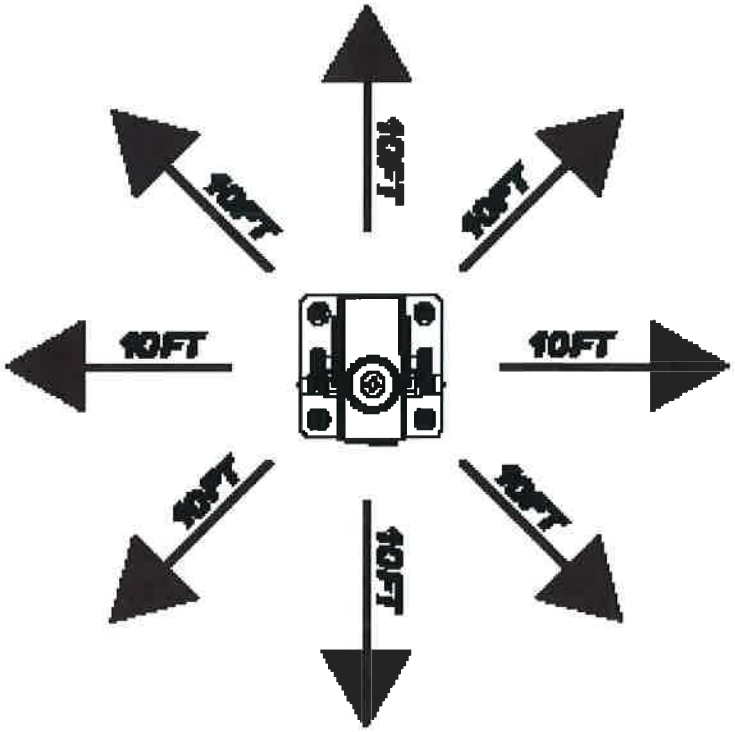

WARNING

Under no circumstance should any person or object be placed inside the displayed safety radius while system in under pressure.

Direct line of sight is required at all times while operating this product. Special care must be taken when preformers are near units. Always inform performers, staff and event personal that may inadvertantly enter the safety radius of this product.

SAFE MOUNTING

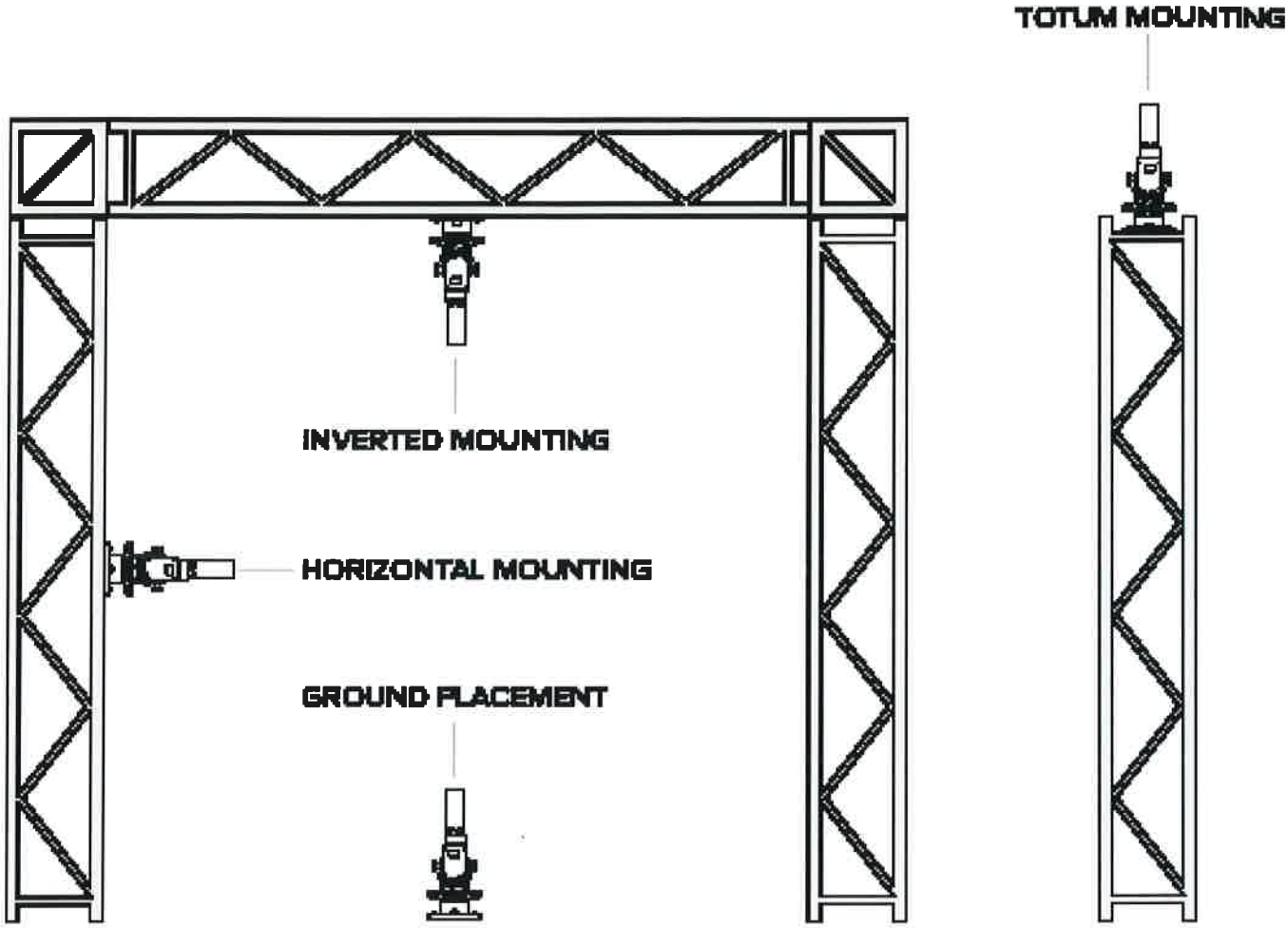

GROUND PLACEMENT	• Recommended use. 4x feet can be removed to access 1/2" through holes. If necessary, use holes to fasten to a solid surface.
HORIZONTAL MOUNTING	• Horizontal mounting requires a solid mounting surface. • If using truss, the structure MUST have adequate ballast to support the weight & recoil force of product. • NEVER mount to flown/hung truss.
INVERTED MOUNTING	• Due to the output from this unit, the minimum safety radius must be followed. Unless this is possible to acheive, inverted mounting MUST be avoided. • NEVER mount to flown/hung truss.
TOTUM MOUNTING	• Totum mounting can be utilized, provided the user has a secure fastening method of product to totum structure.

HARDWARE **OVERVIEW**

UNIT **REAR**

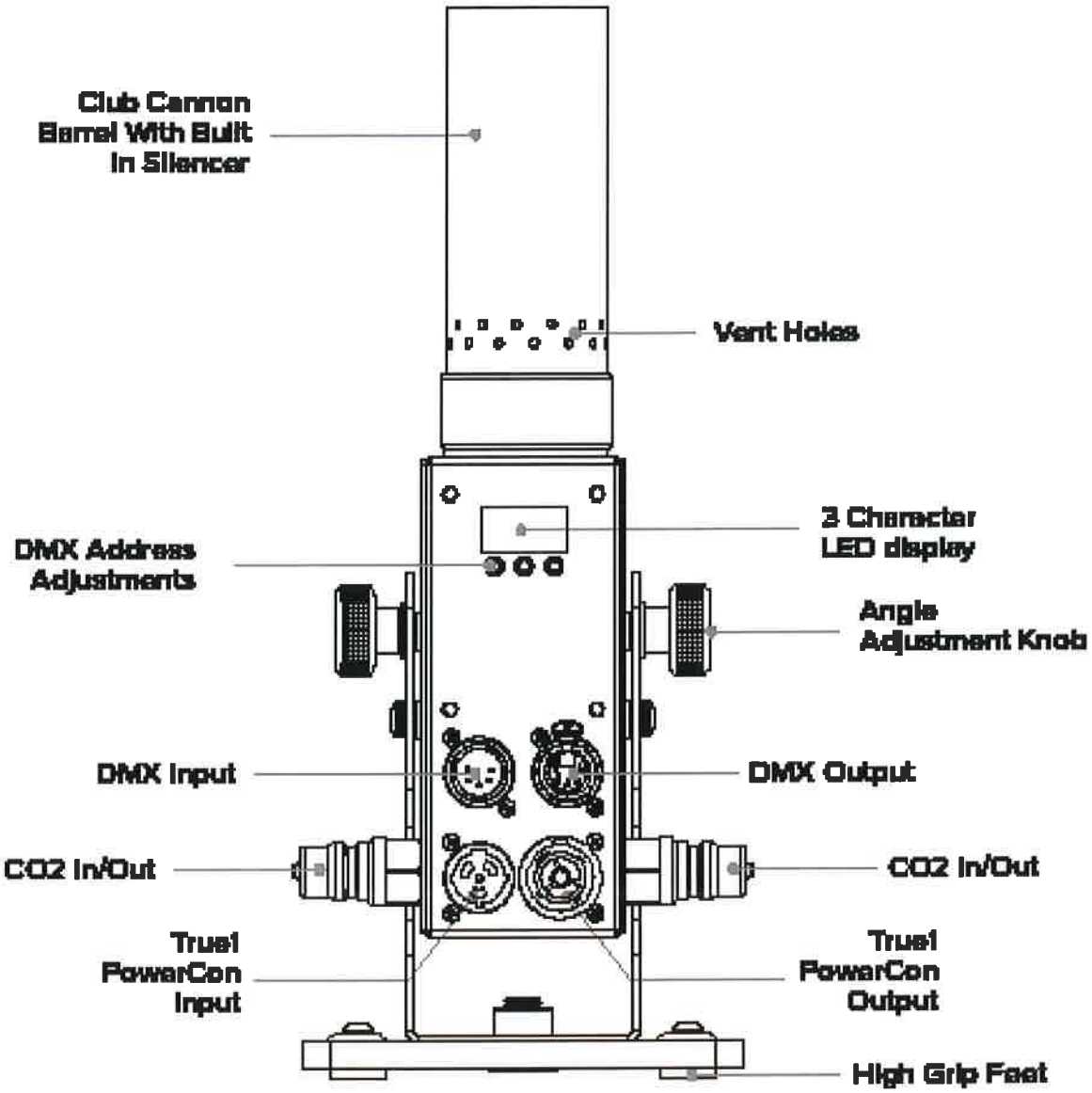

POWER

This product is available in 2 voltages, marked on unit accordingly.

- **North America - 110-120v AC with included TRUE1 PowerCon cable**
- **Worldwide - 220-240v AC with included TRUE1 PowerCon cable**

DMX

NEUTRIK 5 Pin XLR Connectors.

- **1 Channel - Activates output (255 value required for operation).**

HARDWARE **SPECIFICATIONS**

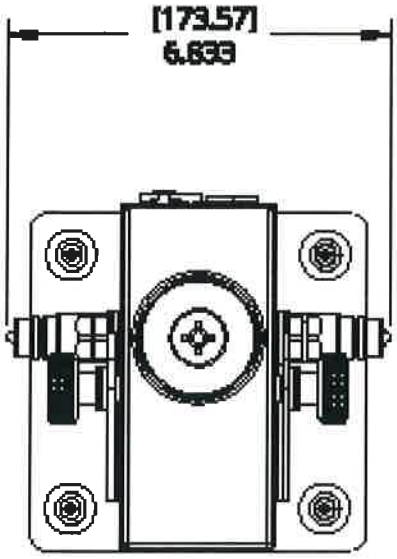

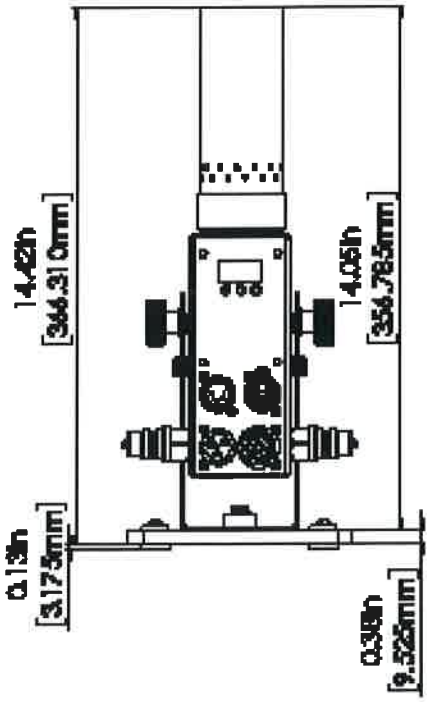

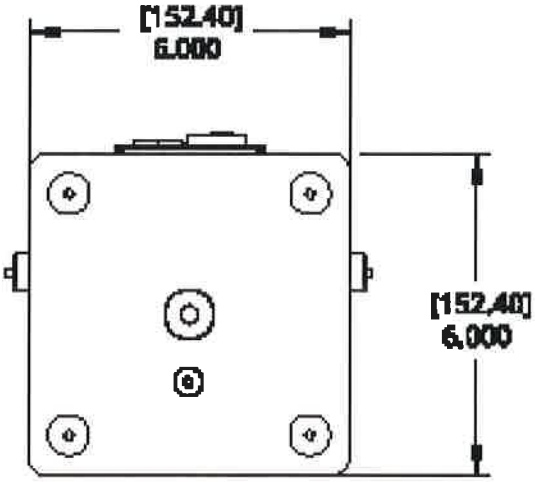

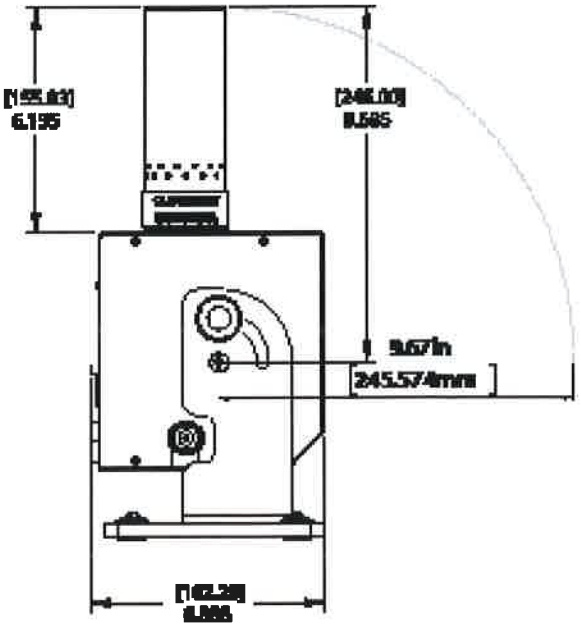

WEIGHT:	11 LBs 4.9 KGs	**VOLTAGE:**	US - 110-220v AC 50-60hz EU - 220-240v AC 50-60hz
DIMENSIONS:	6" x 6" x 14.5" 152 mm x 152 mm x 368mm	**CURRENT:**	25W MAX
TRUSS MOUNT:	Remove base and use integrated 1/2-13" nut.	**CO_2 CONSUMPTION:**	~ 0.83LB / Sec ~ 0.36KG / Sec

CO_2 REQUIREMENTS

SIPHON CO_2 TANK REQUIRED.

Liquid CO_2 is the key to creating large plumes of fog. Gaseous CO_2, which comes from a non-siphon CO_2 tank, will **NOT** create the desired fog effect.

The siphon tube feeds the Club Cannon product liquid from the bottom of the tank, while a standard CO_2 tank draws gas from the top of the tank (see illustration).

If your tank is full, but not producing fog, you most likely have the wrong type of tank. Ask your gas supplier to exchange it for a siphon model. **Once the fog starts to appear thin, your tank is depleted of liquid.** It is now time to get a refill.

HUMIDITY

The effect works best in humid environments. Anytime humidity levels are 25% or below, the fog will appear noticeably thinner. Use the weather app on your phone to check your local humidity level.

TEMPERATURE

To ensure reliable operation of your product, keep tanks out of direct sunlight. Maximum tank temperature is 80 degrees F. When the tank temperature is above 80F, the pressure increases and can affect operation.

Where can I buy CO_2?

CO_2 can be purchased from any local gas or welding supplier.

Click here to find the nearest MATHESON location.
Click here to find the nearest PRAXAIR location.
Click here to find the nearest AIRGAS location.

NOTICE

Failure to use a siphon tank will prevent the product from producing the desired effect. If the product is firing clear gas and not fog, this is likely the cause.

CO_2 SETUP

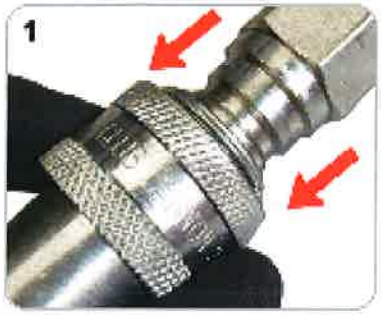

1. Attach the female quick connect fitting on the hose, to the male quick connect fitting on the product. Pull back the sleeve and apply slight force to mate the connectors.

THIS STEP MUST OCCUR BEFORE PRESSURIZING SYSTEM

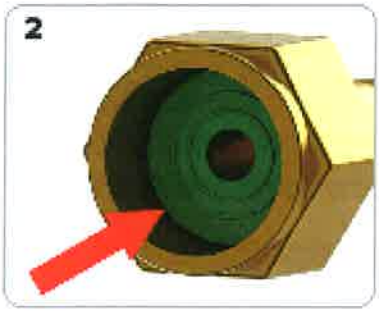

2. Place the plastic washer inside the fitting that connects to the tank, then attach the fitting. Tighten with the supplied tool, or any adjustable wrench (1 1/8").

FAILURE TO INSTALL WASHER WILL RESULT IN A LEAK

3. Position your CO_2 tank in a nearby location. Make sure the tank is stable, and won't tip over. Tanks should be secured with ratcheting straps or chain to ensure they are secure.

UNSTABLE TANKS CAN BE EXTREMELY DANGEROUS

4. After attaching and tightening all fittings, turn on your CO_2 tank and check for any leaks. If a leak is present, cease use immediately and contact Club Cannon. Trigger the unit each time you want to release CO_2.

Note: After use, close the valve on the CO_2 tank. Clear the remaining gas through the product, depleting all pressure in the system. Once the product is de-pressurized, you can safely detach the hose from the tank and product.

DANGER

Club Cannon products (the "Product") are meant to be used to create special effects. Any use of these Products shall be in accordance with the Terms and Conditions presented at the time of sale, and as they appear in this manual. Any misuse or abuse of this Product can be extremely dangerous.

Club Cannon, LLC accepts no responsibility or liability for damages or injuries caused by misuse or abuse of the Product.

QUICK START DMX GUIDE

2. Boot Pro Jet

The Pro Jet accepts AC power through the TRUE1 connector on the rear of the product. Verify correct supply voltage prior to use. Incorrect voltage may cause damage to unit. Rated voltage is marked above the power inlet.

3. Set Addresses

To expedite setup time, we have implimented single digit addressing. Each set of arrows independantly controls the above digit. While receiving DMX hold button to unlock first. Note: Only 1 channel triggering is availible on this unit.

4. Connect DMX

The last step is to attach a DMX controller like "The Button" or "ShoMaster" to control the Pro Jet. The decimal indicates that the Pro Jet is receiving a DMX signal.

5. Attach Hose

Follow the steps outlined on **CO_2 SETUP GUIDE** for proper CO_2 setup.

A CO2 terminator should be installed on any unused quick connect to prevent leaks and/or CO2 loss.

HOME SCREEN

This unit features quick access to setting the DMX address. This is the default screen that is shown when the Pro Jet is first powered on.

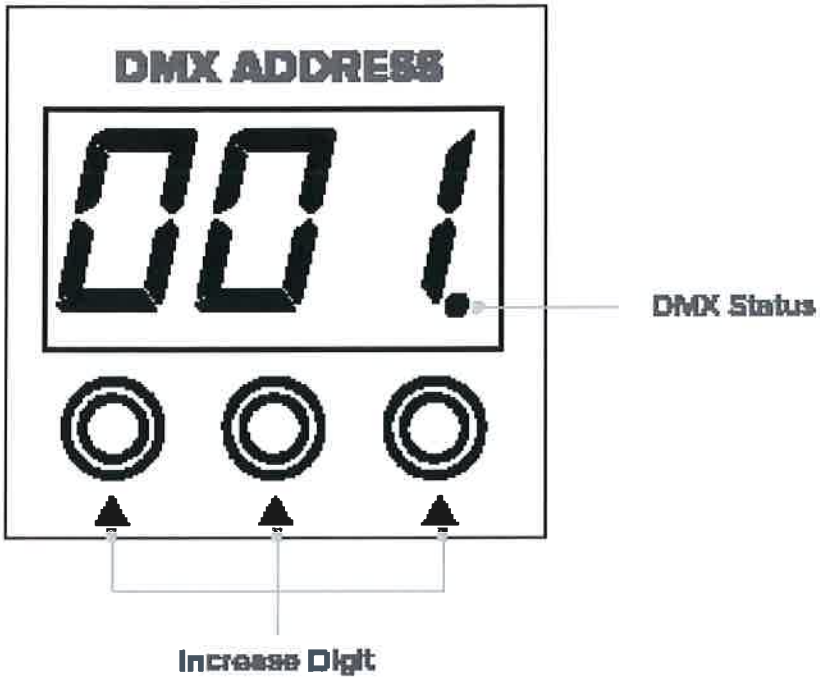

DMX ADDRESSING

When the Pro Jet is receiving DMX the unit will enter a lockout state. Either removing DMX or holding down a button for 5 seconds will allow readdressing.

While addressing the Pro Jet, there is a 3 second window before the address is store. If the unit is receiving DMX it will re-enter its lockout state.

PURGE LINES

Line purging can be used as a convenience feature at the end of a show. This will allow an operator to clear the remaining CO2 through the hoses and unit without the need of DMX control. Before using the feature, CO2 tanks must be turned off and DMX signal must be disconnected.

Before purging, warn anyone nearby.
Press and hold 2 outer buttons.

There will be a 5 second delay after activating the purge lines feature. This allows the user sufficient time to step away from the unit.

Valve will be opened for 10 seconds. User can disable purge by pressing any button.

WARNING

Ensure no persons or living thing are inside the safety radius when using the Purge Lines feature. DMX must be disconnected for the Purge Lines feature to be available for use.

Never handle the product by the barrel, as it will become extremely cold after use. Frostbite can occur if handled improperly. Utilize the load handles for transporting / moving unit.

CO2 PASSTHROUGH

The CO2 Passthrough feature is very useful for supplying CO2 to multiple Pro Jets at once. We recommend feeding CO2 from both sides of your setup, to ensure even pressure throughout the entire system.

- Daisy chain hoses are sold separately. Adapters are available to convert standard hoses to daisy chain.
- For best effect, link all units together throughout and feed CO2 from both sides of system.
- For best performance, we recommend 5FT, 8FT, or 15FT daisy chain hose lengths.
- CO2 terminator should be installed on any unused quick connect to prevent leaks.
- Using CO2 passthrough ensures all tanks drain equally, preventing tanks from deplete out of order.
- Tank sources can consist of multiple tanks - combined with Cylinder Links or a manifold.
- For best performance, limit each loop to 4 units.

SETUP EXAMPLES

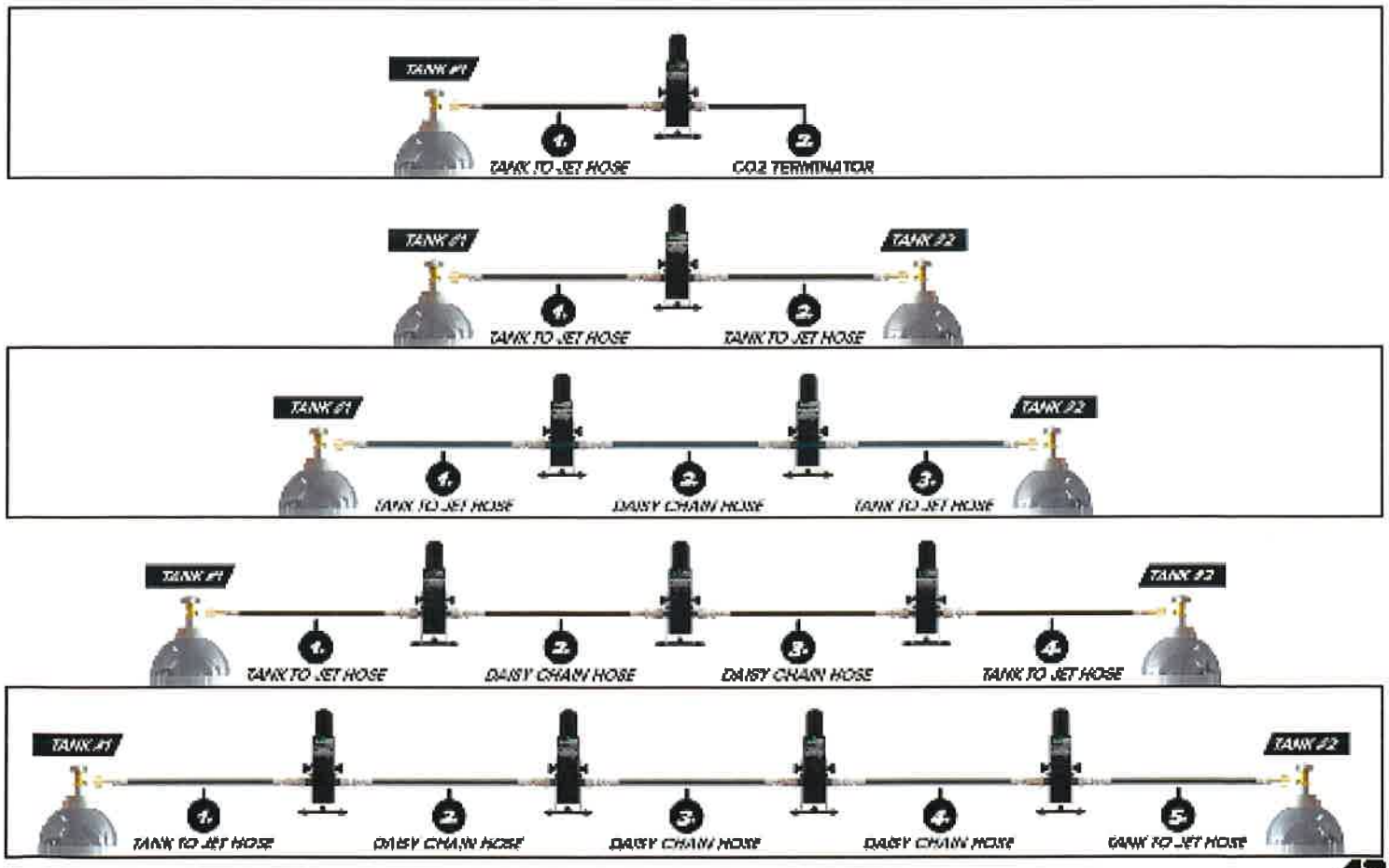

DEVICE TROUBLESHOOTING

ISSUE	SOLUTION
Display Blank or Odd Characters	• Reboot via power cycle. • If issue persists, contact Club Cannon directly.
Unit Resetting While Triggering	• Make sure power supply is properly grounded. • If no earth ground is present, cease use immediately.
Valves Not Opening Reliably	• Ensure sufficient voltage & amperage is supplied to unit. • Ensure tanks are not in direct sunlight, causing increased pressure. Tanks should not exceed 80 degrees F to ensure reliable operation.
Leak From Barrel	• Cease use immediately if any leaks are present. • Contact Club Cannon directly for repair instructions.
Leak From Quick Connect	• Cease use immediately if any leaks are present. • Ensure no particles or contaminates are present inside the female quick connector. Check for any damage to black O-ring.
Leak From Tank Connection	• Ensure a CO2 washer has been inserted into the brass CGA-320 fitting prior to connecting to tank. Use included attachment tool to securely fasten the tank connection.
Fog Appears Thin	• Ensure CO2 tanks have necessary siphon tube installed. • Standard CO2 tanks do not produce the desired effect. • Check relative humidity. Low humidity will have a negative affect on the fog appearance.
Unit Does Not Power On	• Ensure correct voltage is being supplied to product. • Supplying incorrect voltage will cause permanent damage. • If issue persists, contact Club Cannon directly.

No User Serviceable Parts Inside

If your issue is not listed, or the suggested solution did not solve the issue, contact Club Cannon.

888-804-8175 / info@clubcannon.com

INCLUDED **WARRANTY**

The Pro Jet includes a 1 year parts & labor warranty against manufacturer defects. Warranty does not cover damage caused by accident, misuse, abuse, alteration, or unauthorized repair. To make a warranty claim, contact Club Cannon directly.

NOTICE

The Pro Jet is an electronic device, sensitive to moisture. To avoid risk of electronic shock, malfunction, or voided warranty, only use in dry environments. Do not operate in harsh weather conditions. Do not block or insert anything into the jet's barrels.

This product should only be used by trained and qualified persons.

Club Cannon, LLC accepts no liability or responsibility for misuse or abuse of this product, nor any liability or responsibility of the products being used with the ShoMaster.

TERMS & CONDITIONS

Use of the Club Cannon® products is subject to the following Terms and Conditions:

Club Cannon® products (collectively, the "Product" or "Products") are not toys. Any misuse of the Products could be extremely dangerous. Club Cannon® Products use carbon dioxide under high pressure to create special effects similar to a fog machine. They are not air cannons and should not be used to shoot projectiles in any fashion. Never place objects of any kind inside the barrel. Never aim or fire the Products at any person or living thing. Never hit any person or object with any of the Products. The Products are meant to be used only in well-ventilated areas. When using the Products, make sure you are in an open field or a well-ventilated area and are at least fifteen (15) feet away from people or other living things. Never hold a Club Cannon® Product by the barrel, especially after it has been used as it becomes extremely cold. Once the Product is attached to the CO_2 tank and the tank is turned on, the gas passing through the Product will be under pressure. Do not disconnect the fitting connecting the hose to the Product until the tank has been turned off and the remaining gas has been cleared through the product, depleting any pressure in the systems components. Stationary Club Cannon® units (collectively, the "Jets") should be mounted or fixed in a safe place. When using the Jets above the ground, always use a safety cable in the event the Product's mount or fixture should fail for any reason. You must supply the safety cable(s) to use with the Jets. If you are under 18, you should not be using the Products.

Carbon dioxide is known as an asphyxiant gas. Carbon dioxide poisoning has been linked to various health issues, including central nervous system damage, permanent deterioration of respiratory functions, suffocation or even death. If you have any health concerns that may be related to the Product's use of carbon dioxide, consult your doctor before using any of the Products. To the extent you may have problems with your back, consult your doctor before using any of the Products in a portable fashion (such as, for decoration purposes only, using the Club Cannon® CO_2 Tank Backpack).

You must supply the carbon dioxide tank to use with the Products. Club Cannon, LLC, a California limited liability company (the "Company"), accepts no responsibility for claims, damages, losses or injuries arising from the tank or any malfunction thereof.

Acknowledging the foregoing, you voluntarily assume all risks associated with the use of the Products with full knowledge and appreciation of the risks involved.

The Company disclaims any liability for product related claims that are due to misuse, improper product selection and/or misapplication of the Products. The Company offers a limited one-year, (365) day warranty for each of the Products. If, during the ninety (365) day warranty period (the "Warranty Period"), which shall commence on the original purchase date, a specific component of the Product fails, the Company will repair or replace it at no cost to you. Notwithstanding the foregoing, the purchaser is responsible for all shipping charges associated with sending the Product to the Company for repair and for its return to the purchaser. If, however, any component of the Product fails after the expiration of the Warranty Period, the warranty coverage does not extend to those components or to any damage they may cause. After the expiration of the Warranty Period, the Company shall not be responsible for the performance of the Products, including any component(s) that were repaired or replaced. This limited warranty shall not apply to failure caused by accident, alterations, abuse or abuse of the Products. This warranty is not transferable. At all times, the purchase price of the Products shall be nonrefundable. Notwithstanding the foregoing, the Company may, in its discretion, accept the return of a new, unused Product for re-sale into condition subject to a twenty-five percent (25%) restocking fee and payment by the purchaser of all shipping charges associated with the return of the Product to the Company. If the Company determines, in its reasonable discretion, that the returned Product has been used, no refund shall be issued to the purchaser.

The Products are provided on an "as-is" with all faults basis and with no warranty except the express warranty set forth above. To the maximum extent permissible by law, the Company disclaims all other warranties, including, but not limited to, the implied warranty of merchantability and the implied warranty of fitness for a particular purpose. The use of the Products is at the sole risk of the user. Under no circumstances shall the Company, its members, managers, officers, agents, employees, successors or assigns be liable for any injuries or damages whatsoever to any person or property arising from the use of the Products, which shall include, but not be limited to, consequential, incidental, special, exemplary or punitive damages. To the maximum extent permissible by law, the Company's liability in all events is limited to, and shall not exceed, the purchase price paid for any Product that gives rise to any liability.

Excluding any services provided to you by the Company under a separate written agreement, these Terms and Conditions constitute the entire agreement between you and the Company regarding the use of the Products and supersede any and all previous and contemporaneous oral and written agreements between you and the Company regarding your use of the Products.

Club Cannon® and its associated logos are trademarks of the Company. You may not use any of the Company's trademarks or logos without the Company's prior written consent. Unless otherwise noted, all materials, including but not limited to the Company's Web site(s), all articles, text, graphics, logos, images, illustrations, designs, icons, photographs, video clips, audio clips, all source pages, including HTML code, and software that is part of the Web site(s), are protected under copyright laws and are the trademarks, trade dress and/or other intellectual properties owned, controlled or licensed by the Company or are otherwise part of the public domain.

The Company's Web site(s) (including linked sites) is controlled by the Company from its office within the State of California, U.S.A. By accessing the Web site(s) and/or purchasing the Products, you and the Company agree that all matters relating to your access to, or use of, the Web site(s) and/or the Products shall be governed by the statutes and laws of the State of California, without regard to conflicts of laws principles. You and the Company also agree and hereby submit to the exclusive personal jurisdiction and venue of the Superior Court of San Luis Obispo County and the United States District Court for the Central District of California with respect to such matters. Those who choose to access the Web site(s) and/or purchase the Products from locations outside California shall be responsible for compliance with local laws, if and to the extent local laws are applicable. Notwithstanding the foregoing, you agree that the Company shall still be allowed to apply for injunctive relief (or an equivalent type of urgent legal relief) in any jurisdiction.

Except for any claim seeking the remedies of the injunctive or equitable powers of a court of competent jurisdiction, any action to enforce or interpret this Agreement, or to resolve disputes with respect to this Agreement, shall be settled by arbitration in accordance with California Code of Civil Procedure Sections 1280 through 1294.2 and any successor provisions thereto. The provisions of California Code of Civil Procedure Sections 1283.05 regarding the right to take depositions and obtain discovery shall apply to the arbitration. Arbitration shall be the exclusive dispute resolution process. Any party may commence arbitration by sending a written demand for arbitration to the other parties. Such demand shall set forth the nature of the matter to be resolved by arbitration. The place of arbitration shall be in the County of San Luis Obispo, California. The substantive law of the State of California shall be applied by the arbitrator in the resolution of the dispute. The parties shall share equally all initial costs of arbitration. The prevailing party shall be entitled to reimbursement of attorneys' fees, costs, and expenses incurred in connection with the arbitration. All decisions of the arbitrator shall be final, binding, and conclusive on all parties. Judgment may be entered upon any such decision in accordance with applicable law in any court having jurisdiction thereof. The arbitrator (if permitted under applicable law) or such court may issue a writ of execution to enforce the arbitrator's decision.

If, for any reason, a court of competent jurisdiction finds any provision of these Terms and Conditions, or portion thereof, to be unenforceable, that provision shall be enforced to the maximum extent permissible so as to effect the intent of the Company as reflected by that provision, and the remainder of these Terms and Conditions shall continue in full force and effect. Any failure by the Company to enforce or exercise any provision of these Terms and Conditions or related rights shall not constitute a waiver of that right or provision.

If any legal proceeding, arbitration or other action is brought or threatened for the enforcement or interpretation of these Terms and Conditions, or because of an alleged dispute, breach, default or misrepresentation in connection with any of the provisions of these Terms and Conditions, and the prevailing party in any such action(s) should incur any legal fees, including, but not limited to, attorneys' fees, paralegal fees, expert witness fees and other similar costs, the successful or prevailing party or parties in any such dispute or action shall be entitled to recover their reasonable attorneys' fees and additional legal costs incurred, together with any other relief to which they may otherwise be entitled, as determined by an arbitrator, judge at trial, or upon appeal or petition.

The Company may make changes to these Terms and Conditions from time to time. When changes are made, the Company will post a new version of the Terms and Conditions on the Web site(s) and continue a copy of the then-applicable Terms and Conditions in future purchases of the Products.

CONTACT US

CLUBCANNON

856 Ricardo Ct, San Luis Obispo, CA 93401
888-804-8175
info@clubcannon.com ● www.clubcannon.com

© CLUB CANNON 2022

Praxair Material Safety Data Sheet

1. Chemical Product and Company Identification

Product Name: Carbon dioxide, refrigerated liquid (MSDS No. P-4573-D)	**Trade Names:** *Liquiflow*™ Liquid Carbon Dioxide, *Medipure*® Liquid Carbon Dioxide
Chemical Name: Carbon dioxide	**Synonyms:** Carbon dioxide (cryogenic liquid), LCO_2, liquefied CO_2
Chemical Family: Acid anhydride	**Product Grades:** Industrial, USP

Telephone: Emergencies: 1-800-645-4633* CHEMTREC: 1-800-424-9300* Routine: 1-800-PRAXAIR

Company Name: Praxair, Inc.
39 Old Ridgebury Road
Danbury, CT 06810-5113

**Call emergency numbers 24 hours a day only for spills, leaks, fire, exposure, or accidents involving this product. For routine information, contact your supplier, Praxair sales representative, or call 1-800-PRAXAIR (1-800-772-9247).*

2. Hazards Identification

EMERGENCY OVERVIEW

WARNING! Cold liquid and gas under pressure.
Can cause rapid suffocation.
Can increase respiration and heart rate.
May cause nervous system damage.
May cause frostbite.
May cause dizziness and drowsiness.
Self-contained breathing apparatus and protective clothing may be required by rescue workers.
This product is a colorless, odorless liquid that transforms to white crystalline particles when discharged from its container. The gas is slightly acidic and may be felt to have a slight, pungent odor and biting taste.

OSHA REGULATORY STATUS: This material is considered hazardous by the OSHA Hazard Communications Standard (29 CFR 1910.1200).

POTENTIAL HEALTH EFFECTS:

Effects of a Single (Acute) Overexposure

Inhalation. Carbon dioxide gas is an asphyxiant with effects due to lack of oxygen. It is also physiologically active, affecting circulation and breathing. Moderate concentrations may cause headache, drowsiness, dizziness, stinging of the nose and throat, excitation, rapid breathing and heart rate, excess salivation, vomiting, and unconsciousness. Lack of oxygen can kill.

Skin Contact. No harm expected from vapor. Prolonged contact with carbon dioxide crystals (snow) could cause frostbite. Cold gas, or liquid or solid carbon dioxide may cause severe frostbite.

Copyright © 1997, 1998, 2004, 2008, 2009, Praxair Technology, Inc.
All rights reserved.

A vertical line in the left margin indicates revised or new material.

Swallowing. An unlikely route of exposure. This product is a gas at normal temperature and pressure. But severe frostbite of the lips and mouth may result from contact with the liquid or solid.

Eye Contact. No harm expected from vapor. Cold gas, or liquid or solid carbon dioxide may cause severe frostbite.

Effects of Repeated (Chronic) Overexposure. No harm expected to healthy individuals. Where competent medical authority deems that such illness would be aggravated by exposure to carbon dioxide, persons in ill health should be restricted from working with or handling this product.

Other Effects of Overexposure. Damage to retinal or ganglion cells and central nervous system may occur.

Medical Conditions Aggravated by Overexposure. The toxicology and the physical and chemical properties of carbon dioxide suggest that overexposure is unlikely to aggravate existing medical conditions.

CARCINOGENICITY: Carbon dioxide is not listed by NTP, OSHA, or IARC.

POTENTIAL ENVIRONMENTAL EFFECTS: None known. For further information, see section 12, Ecological Information.

3. Composition/Information on Ingredients

See section 16 for important information about mixtures.

COMPONENT	CAS NUMBER	CONCENTRATION
Carbon dioxide	124-38-9	>99%*

**The symbol > means "greater than."*

4. First Aid Measures

INHALATION: Immediately remove to fresh air. If not breathing, give artificial respiration. If breathing is difficult, qualified personnel may give oxygen. Call a physician.

SKIN CONTACT: For exposure to cold liquid, vapor, or solid, immediately warm frostbite area with warm water not to exceed 105°F (41°C). In case of massive exposure, remove contaminated clothing while showering with warm water. Call a physician.

SWALLOWING: An unlikely route of exposure. This product is a gas at normal temperature and pressure.

EYE CONTACT: For exposure to cold liquid, vapor, or solid, immediately flush eyes thoroughly with warm water for at least 15 minutes. Hold the eyelids open and away from the eyeballs to ensure that all surfaces are flushed thoroughly. See a physician, preferably an ophthalmologist, immediately.

NOTES TO PHYSICIAN: *There is no specific antidote. Treatment of overexposure should be directed at the control of symptoms and the clinical condition of the patient.*

5. Fire Fighting Measures

FLAMMABLE PROPERTIES: Carbon dioxide cannot catch fire.

SUITABLE EXTINGUISHING MEDIA: Nonflammable—use media appropriate for surrounding fire.

PRODUCTS OF COMBUSTION: Not applicable.

PROTECTION OF FIREFIGHTERS: WARNING! Cold liquid and gas under pressure. Evacuate all personnel from danger area. Immediately spray containers with water from maximum distance until cool, taking care not to direct spray onto vents on top of container. Do not discharge sprays into liquid carbon dioxide, which will freeze water rapidly. When containers have cooled, move them away from fire area if without risk. Self-contained breathing apparatus and protective clothing may be required by rescue workers. On-site fire brigades must comply with OSHA 29 CFR 1910.156.

Specific Physical and Chemical Hazards. Heat of fire can build pressure in cylinder and cause it to rupture. No part of container should be subjected to a temperature higher than 125°F (52°C). Liquid carbon dioxide containers are equipped with pressure relief devices.

Protective Equipment and Precautions for Firefighters. Firefighters should wear appropriate gear for surrounding fire.

6. Accidental Release Measures

STEPS TO BE TAKEN IF MATERIAL IS RELEASED OR SPILLED:

WARNING! Cold liquid and gas under pressure.

Personal Precautions. Carbon dioxide is an asphyxiant. Lack of oxygen can kill. Evacuate all personnel from danger area. Use self-contained breathing apparatus and protective clothing where needed. Liquid carbon dioxide will not "spill." Flakes of solid carbon dioxide will form at pressures below 67 psig (461.95 kPa) and fall as snow. Shut off leak if you can do so without risk. Ventilate area or move container to a well-ventilated area. Test for sufficient oxygen, especially in confined spaces, before allowing reentry.

Environmental Precautions. Prevent waste from contaminating the surrounding environment. Keep personnel away. Discard any product, residue, disposable container, or liner in an environmentally acceptable manner, in full compliance with federal, state, and local regulations. If necessary, call your local supplier for assistance.

7. Handling and Storage

PRECAUTIONS TO BE TAKEN IN HANDLING: Never allow any unprotected part of your body to touch uninsulated pipes or vessels containing refrigerated liquids. Flesh will stick to the extremely cold metal and tears when you try to pull free. Use a suitable hand truck to move containers. Containers must be handled and stored in an upright position. Do not drop or tip containers, or roll them on their sides. If valve is hard to open, discontinue use and contact your supplier. For other precautions in using carbon dioxide, see section 16.

PRECAUTIONS TO BE TAKEN IN STORAGE: Gas can cause rapid suffocation due to oxygen deficiency. Store and use with adequate ventilation. Do not store in a confined space. Carbon dioxide is heavier than air. It tends to accumulate near the floor of an enclosed space, displacing air and pushing it upward. This creates an oxygen-deficient atmosphere near the

floor. Ventilate space before entry. Verify sufficient oxygen concentration. Close container valve after each use; keep closed even when empty. Storage areas should be clean and dry, free of oils and dust. These collect on condensing coils and impair their efficiency. Temperatures should not exceed 125°F (51.1°C). Cryogenic containers are equipped with a pressure relief device and a pressure-controlling valve. Under normal conditions, these containers periodically vent product to control internal pressure. Use adequate pressure relief devices in systems and piping to prevent pressure buildup; entrapped liquid can generate extremely high pressures.

RECOMMENDED PUBLICATIONS: For further information on storage, handling, and use, see Praxair publications P-14-153, *Guidelines for Handling Gas Cylinders and Containers*; P-15-073, *Safety Precautions for Carbon Dioxide*; and P-3499, *Safety Precautions and Emergency Response Planning*. Obtain from your local supplier.

8. Exposure Controls/Personal Protection

See section 16 for important information on by-products generated during use in welding and cutting.

COMPONENT	OSHA PEL	ACGIH TLV-TWA (2009)
Carbon dioxide	5,000 ppm	5,000 ppm; 30,000 ppm, 15 min STEL

TLV-TWAs should be used as a guide in the control of health hazards and not as fine lines between safe and dangerous concentrations.

IDLH = 40,000 ppm

ENGINEERING CONTROLS:

Local Exhaust. Use a local exhaust system, if necessary, to keep the concentration of carbon dioxide below all applicable exposure limits in the worker's breathing zone.

Mechanical (General). Under certain conditions, general exhaust ventilation may be acceptable to keep carbon dioxide below the exposure limit.

Special. None

Other. None

PERSONAL PROTECTIVE EQUIPMENT:

Skin Protection. Wear insulated neoprene gloves and metatarsal shoes for cylinder handling. Protective clothing where needed. Cuffless trousers should be worn outside shoes. Select in accordance with OSHA 29 CFR 1910.132 and 1910.133. When using carbon dioxide or carbon dioxide mixtures in welding and cutting, see Praxair MSDS P-4574, gaseous carbon dioxide, for requirements. Regardless of protective equipment, never touch live electrical parts.

Eye/Face Protection. Select in accordance with OSHA 29 CFR 1910.133.

Respiratory Protection. A respiratory protection program that meet OSHA 29 CFR 1910.134, ANSI Z88.2, or MSHA 30 CFR 72.710 (where applicable) requirements must be followed whenever workplace conditions warrant respirator use. Use an air-supplied or air-purifying cartridge if the action level is exceeded. Ensure the respirator has the appropriate protection factor for the exposure level. If cartridge type respirators are used, the cartridge must be appropriate for the chemical exposure (e.g., an organic vapor cartridge). For emergencies or instances with unknown exposure levels, use a self-contained breathing apparatus.

9. Physical and Chemical Properties

APPEARANCE:	Colorless liquid
ODOR:	Slight, pungent
ODOR THRESHOLD:	Not available.
PHYSICAL STATE:	Refrigerated liquid
pH:	3.7 (for carbonic acid)
SUBLIMATION POINT at 1 atm:	-109.3°F (-78.5°C)
FLASH POINT (test method):	Not applicable.
EVAPORATION RATE (Butyl Acetate = 1):	High
FLAMMABILITY:	Nonflammable
FLAMMABLE LIMITS IN AIR, % by volume:	LOWER: Not applicable. UPPER: Not applicable.
VAPOR PRESSURE at 70°F (21.1°C):	838 psig (5778 kPa)
LIQUID DENSITY (saturated) at 70°F (21.1°C) and 1 atm:	47.6 lb/ft^3 (762 kg/m^3)
SPECIFIC GRAVITY (H_2O = 1):	Not available.
SPECIFIC GRAVITY (Air = 1) at 70°F (21.1°C) and 1 atm:	1.52
SOLUBILITY IN WATER vol/vol at 68°F (20°C) and 1 atm:	0.90
PARTITION COEFFICIENT: n-octanol/water:	Not available.
AUTOIGNITION TEMPERATURE:	Not applicable.
DECOMPOSITION TEMPERATURE:	None
PERCENT VOLATILES BY VOLUME:	100
MOLECULAR WEIGHT:	44.01
MOLECULAR FORMULA:	CO_2

10. Stability and Reactivity

CHEMICAL STABILITY: ☐ Unstable ☒ Stable

CONDITIONS TO AVOID: Contact with incompatible materials, exposure to electrical discharges, and/or high temperatures as stated below.

INCOMPATIBLE MATERIALS: Alkali metals, alkaline earth metals, metal acetylides, chromium, titanium above 1022°F (550°C), uranium above 1382°F (750°C), magnesium above 1427°F (775°C)

HAZARDOUS DECOMPOSITION PRODUCTS: Electrical discharges and high temperatures decompose carbon dioxide into carbon monoxide and oxygen.

POSSIBILITY OF HAZARDOUS REACTIONS: ☒ May Occur ☐ Will Not Occur

Decomposition into toxic, flammable, and/or oxidizing materials under above-stated conditions.

11. Toxicological Information

ACUTE DOSE EFFECTS: The welding process may generate hazardous fumes and gases. If using carbon dioxide for welding and cutting, see Praxair MSDS P-4574, gaseous carbon dioxide.

Carbon dioxide is an asphyxiant. It initially stimulates respiration and then causes respiratory depression. High concentrations result in narcosis. Symptoms in humans are as follows:

EFFECT:	CONCENTRATION:
Breathing rate increases slightly.	1%
Breathing rate increases to 50% above normal level. Prolonged exposure can cause headache, tiredness.	2%
Breathing increases to twice normal rate and becomes labored. Weak narcotic effect. Impaired hearing, headache, increased blood pressure and pulse rate.	3%
Breathing increases to approximately four times normal rate, symptoms of intoxication become evident, and slight choking may be felt.	4 - 5%
Characteristic sharp odor noticeable. Very labored breathing, headache, visual impairment, and ringing in the ears. Judgment may be impaired, followed within minutes by loss of consciousness.	5 - 10%
Unconsciousness occurs more rapidly above 10% level. Prolonged exposure to high concentrations may eventually result in death from asphyxiation.	10 - 100%

REPRODUCTIVE EFFECTS: A single study has shown an increase in heart defects in rats exposed to 6 percent carbon dioxide in air for 24 hours at different times during gestation. There is no evidence that carbon dioxide is teratogenic in humans.

12. Ecological Information

ECOTOXICITY: No adverse ecological effects expected.

OTHER ADVERSE EFFECTS: Carbon dioxide does not contain any Class I or Class II ozone-depleting chemicals.

13. Disposal Considerations

WASTE DISPOSAL METHOD: Do not attempt to dispose of residual or unused quantities. Return cylinder to supplier.

14. Transport Information

DOT/IMO SHIPPING NAME: Carbon dioxide, refrigerated liquid

HAZARD CLASS: 2.2	PACKING GROUP/Zone: NA*	IDENTIFICATION NUMBER: UN2187	PRODUCT RQ: None

SHIPPING LABEL(s): NONFLAMMABLE GAS

PLACARD (when required): NONFLAMMABLE GAS

**NA = Not applicable.*

SPECIAL SHIPPING INFORMATION: Cylinders should be transported in a secure position, in a well-ventilated vehicle. Cylinders transported in an enclosed, nonventilated compartment of a vehicle can present serious safety hazards.

Shipment of compressed gas cylinders that were filled without the owner's consent is a violation of federal law [49 CFR 173.301(b)].

MARINE POLLUTANTS: Carbon dioxide is not listed as a marine pollutant by DOT.

15. Regulatory Information

The following selected regulatory requirements may apply to this product. Not all such requirements are identified. Users of this product are solely responsible for compliance with all applicable federal, state, and local regulations.

U.S. FEDERAL REGULATIONS:

EPA (ENVIRONMENTAL PROTECTION AGENCY)

CERCLA: COMPREHENSIVE ENVIRONMENTAL RESPONSE, COMPENSATION, AND LIABILITY ACT OF 1980 (40 CFR Parts 117 and 302):

Reportable Quantity (RQ): None

SARA: SUPERFUND AMENDMENT AND REAUTHORIZATION ACT:

SECTIONS 302/304: Require emergency planning based on Threshold Planning Quantity (TPQ) and release reporting based on Reportable Quantities (RQ) of Extremely Hazardous Substances (EHS) (40 CFR Part 355):

TPQ: None
EHS RQ (40 CFR 355): None

SECTIONS 311/312: Require submission of MSDSs and reporting of chemical inventories with identification of EPA hazard categories. The hazard categories for this product are as follows:

IMMEDIATE: Yes	PRESSURE: Yes
DELAYED: No	REACTIVITY: No
	FIRE: No

SECTION 313: Requires submission of annual reports of release of toxic chemicals that appear in 40 CFR Part 372.

Carbon dioxide is not subject to reporting under Section 313.

40 CFR 68: RISK MANAGEMENT PROGRAM FOR CHEMICAL ACCIDENTAL RELEASE PREVENTION: Requires development and implementation of risk management programs at facilities that manufacture, use, store, or otherwise handle regulated substances in quantities that exceed specified thresholds.

Carbon dioxide is not listed as a regulated substance.

TSCA: TOXIC SUBSTANCES CONTROL ACT: Carbon dioxide is listed on the TSCA inventory.

OSHA: OCCUPATIONAL SAFETY AND HEALTH ADMINISTRATION:

29 CFR 1910.119: PROCESS SAFETY MANAGEMENT OF HIGHLY HAZARDOUS CHEMICALS: Requires facilities to develop a process safety management program based on Threshold Quantities (TQ) of highly hazardous chemicals.

Carbon dioxide is not listed in Appendix A as a highly hazardous chemical.

STATE REGULATIONS:

CALIFORNIA: Carbon dioxide is not listed by California under the SAFE DRINKING WATER AND TOXIC ENFORCEMENT ACT OF 1986 (Proposition 65).

PENNSYLVANIA: Carbon dioxide is subject to the PENNSYLVANIA WORKER AND COMMUNITY RIGHT-TO-KNOW ACT (35 P.S. Sections 7301-7320).

16. Other Information

Be sure to read and understand all labels and instructions supplied with all containers of this product.

OTHER HAZARDOUS CONDITIONS OF HANDLING, STORAGE, AND USE: *Cold liquid and gas under pressure.* Contact may cause frostbite. Use piping and equipment adequately designed to withstand pressures to be encountered. Use a backflow prevention device in any piping. Avoid materials incompatible with cryogenic use; some metals such as carbon steel may fracture easily at low temperature. Never work on a pressurized system. If there is a leak, close the container valve. Blow the system down in a safe and environmentally sound manner in compliance with all federal, state, and local laws; then repair the leak. Never place a compressed gas cylinder where it may become part of an electrical circuit.

Mixtures. When you mix two or more chemicals, you can create additional, unexpected hazards. Obtain and evaluate the safety information for each component before you produce the mixture. Consult an industrial hygienist or other trained person when you evaluate the end product. Remember, chemicals have properties that can cause serious injury or death.

HAZARD RATING SYSTEMS:

NFPA RATINGS:		HMIS RATINGS:	
HEALTH	= 3	HEALTH	= 3
FLAMMABILITY	= 0	FLAMMABILITY	= 0
INSTABILITY	= 0	PHYSICAL HAZARD	= 2
SPECIAL	= SA (CGA recommends this to designate Simple Asphyxiant.)		

STANDARD VALVE CONNECTIONS FOR U.S. AND CANADA:

THREADED:	CGA-320
	CGA-320 for withdrawal of refrigerated liquid
PIN-INDEXED YOKE:	Not applicable.
ULTRA-HIGH-INTEGRITY CONNECTION:	Not applicable.

Use the proper CGA connections. DO NOT USE ADAPTERS. Additional limited-standard connections may apply. See CGA pamphlet V-1 listed below. Ask your supplier about free Praxair safety literature as referred to in this MSDS and on the label for this product. Further information can be found in the following materials published by the Compressed Gas Association, Inc. (CGA), 4221 Walney Road, 5th Floor, Chantilly, VA 20151-2923, Telephone (703) 788-2700, http://www.cganet.com/Publication.asp.

AV-1	*Safe Handling and Storage of Compressed Gases*
AV-7	*Characteristics and Safe Handling of Carbon Dioxide*
G-6	*Carbon Dioxide*
G-6.1	*Standard for Low Pressure Carbon Dioxide Systems at Customer Sites*
G-6.2	*Commodity Specification for Carbon Dioxide*
P-1	*Safe Handling of Compressed Gases in Containers*
P-2	*Characteristics and Safe Handling of Medical Gases*
SB-2	*Oxygen-Deficient Atmospheres*
V-1	*Compressed Gas Cylinder Valve Inlet and Outlet Connections*
—	*Handbook of Compressed Gases, Fourth Edition*

Praxair asks users of this product to study this MSDS and become aware of product hazards and safety information. To promote safe use of this product, a user should (1) notify employees, agents, and contractors of the information in this MSDS and of any other known product hazards and safety information, (2) furnish this information to each purchaser of the product, and (3) ask each purchaser to notify its employees and customers of the product hazards and safety information.

The opinions expressed herein are those of qualified experts within Praxair, Inc. We believe that the information contained herein is current as of the date of this Material Safety Data Sheet. Since the use of this information and the conditions of use of the product are not within the control of Praxair, Inc., it is the user's obligation to determine the conditions of safe use of the product.

Praxair MSDSs are furnished on sale or delivery by Praxair or the independent distributors and suppliers who package and sell our products. To obtain current MSDSs for these products, contact your Praxair sales representative or local distributor or supplier, or download from www.praxair.com. If you have questions regarding Praxair MSDSs, would like the form number and date of the latest MSDS, or would like the names of the Praxair suppliers in your area, phone or write the Praxair Call Center (Phone: 1-800-PRAXAIR; Address: Praxair Call Center, Praxair, Inc., PO Box 44, Tonawanda, NY 14151-0044).

Praxair, the *Flowing Airstream* design, *Liquiflow*, and *Medipure* are trademarks or registered trademarks of Praxair Technology, Inc. in the United States and/or other countries.

PRAXAIR

Praxair, Inc.
39 Old Ridgebury Road
Danbury, CT 06810-5113

PINAL COUNTY
WIDE OPEN OPPORTUNITY

AGENDA ITEM

March 6, 2024 ADMINISTRATION BUILDING A
FLORENCE, ARIZONA

REQUESTED BY:

Funds #:

Dept. #:

Dept. Name:

Director:

BRIEF DESCRIPTION OF AGENDA ITEM AND REQUESTED BOARD ACTION:

Discussion/approval/disapproval of Pinal County requesting to become a party to the Good Neighbor Agreement between the Town of Superior and Resolution Copper, and authorizing a District #5 Representative to participate in the Community Working Group meetings. (Leo Lew/Chris Keller)

BRIEF DESCRIPTION OF THE FISCAL CONSIDERATIONS AND/OR EXPECTED FISCAL IMPACT OF THIS AGENDA ITEM:

N/A

BRIEF DESCRIPTION OF THE EXPECTED PERFORMANCE IMPACT OF THIS AGENDA ITEM:

N/A

MOTION:

Approve as presented

History

Time	Who	Approval
2/27/2024 1:08 PM	County Attorney	Yes
2/27/2024 1:27 PM	Budget Office	Yes
2/27/2024 5:10 PM	County Manager	Yes
2/28/2024 9:03 AM	Clerk of the Board	Yes

ATTACHMENTS:

Click to download

Good Neighbor Agreement

Good Neighbor Agreement

DATE: **November 29, 2023**

PARTIES, This Good Neighbor Agreement ("Agreement") is made as of March 6, 2024 between Resolution Copper Mining LLC ("RCM") and the Town of Superior Arizona ("TOS"). As used herein, "Party" refers to either RCM or TOS, and "Parties" refers to RCM and TOS collectively. Both Party and Parties may include any future signatories to this Agreement.

WHEREAS, RCM desires to work with the greater Superior community and surrounding areas that might be affected by the project to find mutually acceptable approaches to the challenges, opportunities, issues, and concerns related to the proposed Resolution Copper Mine.

WHEREAS, the Parties agree that Stakeholders and citizens should have a say in decisions about actions that affect their lives;

WHEREAS, in 2013, the Community Working Group (CWG) was established to keep citizens informed about the proposed Resolution Copper Mining project, discuss issues and concerns about its development, and economic, social, and environmental impacts on the region. CWG ensures ongoing transparency and communication between the mine and the community and is intended to find ways of resolving issues of concern;

WHEREAS, the Parties wish to create a Relationship Committee to more formally evaluate issues that arise between parties receiving funding or engaging RCM and provide a forum for amicably resolving conflicts and disputes (since the Relationship Committee is a subset of the CWG, all instances of "Community Working Group" and "CWG" will include and incorporate the Relationship Committee unless specifically noted); and

WHEREAS, the Parties wish to have one document that outlines the purposes and processes of both the CWG and the Relationship Committee.

NOW, THEREFORE, in consideration of the mutual agreements and covenants set forth herein, and other good and valuable consideration, the receipt and sufficiency of which is hereby acknowledged, the Parties acknowledge and agree to 1) the Working Agreement of the CWG and 2) the Operating Agreement of the Relationship Committee, as set forth below:

1.0 Principles of Relationship

1.1 **Mutual interest and cooperation**. The Parties commit to the principles of good faith and promoting mutual interest. The Parties agree to support significant, transparent, and meaningful engagement between them to advance the development of the RCM Project and related socio-economic development and growth of the CWG and as well as the health and vibrancy of the other Parties.

1.2 **Support for Signatories of this agreement**. The Parties will work together to develop an understanding of the issues and priorities of the TOS and the other signatories of this agreement and to jointly facilitate implementation and monitoring of certain obligations under this Agreement in order to promote the sustainable socio-economic development of TOS and partnerships related to the development of the RCM.

1.3 **Publicity about the RCM Project.** The Parties agree to provide correct and accurate information about the RCM Project to the public (which includes citizens and residents of TOS and any third parties) and take reasonable steps to ensure that information about the RCM Project provided to the public by third parties is correct and wrong information is not distributed.

2.0 Community Working Group

2.1 Scope/Objective

2.1.1 To address issues of concern raised by parties to contracted relationships related to Resolution Copper Mining Operations;

2.1.2 To provide a mechanism for maintaining open lines of communication between the Parties to this Agreement, the affected local communities, affected tribes and Resolution Copper;

2.1.3 To provide a mechanism for monitoring the development and implementation of all audits, plans, programs, studies, and monitoring related to the USFS EIS;

2.1.4 To provide a forum to request additional study or provide information to the community on specific concerns raised by CWG or members of the community; and

2.1.5 To monitor and encourage progress under other agreements entered into by Parties to this Agreement.

2.2 Role of the Community Working Group

2.2.1 The CWG is designed as a process to help make better decisions that incorporate the interests and concerns of all affected stakeholders and meet the needs of RCM and regulatory agency decision-makers. The intent of the CWG is to invite a broad range of community interests to participate in dialogue, fact-finding, planning, and consensus building. The CWG will meet regularly to explore topics of interest, review the status of issues and project components, develop and carry out work plans as desired, provide information to respective stakeholder groups, and offer guidance to RCM.

2.2.2 The CWG is a community group and will not be asked to make decisions on behalf of the company, public agencies, local municipal governments, tribes, landowners, or any other stakeholder group. However, RCM will carefully consider CWG advice and input and will provide an explanation where a CWG recommendation has not been accepted for implementation.

2.3 Makeup, Eligibility to Join, Funding, Attendance

2.3.1 CWG, which was established early in the development of the project, shall continue as the key forum for communication, presentations, questions and concerns. The present members of the CWG shall continue.

2.3.2 New members may be selected by the current members of the CWG and confirmed by the Relationship Committee.

2.3.3 Resolution Copper shall continue to fund the facilitation of the CWG as well as its relevant subcommittees through final project closure at its current funding level, adjusted for inflation, unless dissolution is unanimously determined to be in the best interest of CWG and Resolution Copper. The project will be considered as not closed if the company or its successor has ongoing activities including but not limited to an active mine operation. Mine closure will be defined using the January 2022 International Council on Mining & Metals "Closure Maturity Framework" Element 14 Closure execution and post-closure monitoring ML-4 Leading Practice.

2.3.4 Resolution Copper's funding of the CWG shall be limited to covering the following costs: facilitator and record keeping, CWG website, administrative costs, venue, meals, travel and lodging.

2.3.5 Resolution Copper's ongoing funding of the CWG is conditioned on project funding by Resolution Copper's parent companies. However, the CWG will continue to be funded as long as there has not been a complete closure as

defined above and this ongoing agreement will be included in any sale of the properties, project or mine to a third party.

2.3.6 The CWG will meet at least quarterly.

2.3.7 CWG is encouraged to appoint one member to the Town of Superior Community Development Committee. Individual CWG members may represent more than one organization including the Town of Superior Community Development Committee.

2.4 Membership

2.4.1 CWG members will reflect the broad range of public interests within the Superior community and surrounding areas that might be affected by the project.

2.4.2 Representative CWG members may include local landowners, members of special interest groups, community service organizations, environmental conservation groups, business interests, unions, education institutions, community leaders, and others.

2.4.3 Membership and invitations to new members will be largely determined by a consensus of the existing members of the CWG and confirmed by the Relationship Committee members.

2.4.4 Members of the CWG will serve for an indefinite period of time. Membership may be cancelled by the Relationship Committee by three consecutive unexcused absences.

2.4.5 All current and new members of the CWG will be provided with a copy of the group's policies and operating procedures, as well as all relevant information about the project and data that may be used to support decisions.

2.4.6 All current and new members will be expected to abide by the policies of the group and support the cooperative spirit of the CWG.

2.4.7 All new members of the CWG will be expected to respect the time and efforts of the group to date and to productively build on that work.

2.4.8 Additional experts, officials, or other stakeholders may be appointed to issue-specific subcommittees to provide specific resources and guidance to the CWG. Each subcommittee will contain at least one member of the CWG.

2.4.9 Subcommittees will provide input to the full CWG and will not make independent recommendations or decisions.

2.5 Expectations

CWG members will be asked to:

2.5.1 Provide input to plans, studies, programs, and decisions that need to be developed for the Resolution Copper Project.

2.5.2 Act as a conduit of information between Resolution Copper and the interested or affected public, including stakeholder groups that might be represented by specific CWG members.

2.5.3 Inform Resolution Copper of issues, concerns, and opportunities that result from communications with your respective organizations and the community.

2.5.4 Report to respective stakeholder and user organizations on a regular basis about the work of the CWG, with the intent of increasing community awareness of the group's work.

2.5.5 To provide additional forums for resolving disputes and misunderstandings arising under various agreements between the Parties.

2.6 Operating Procedures

2.6.1 CWG meeting agendas will be developed cooperatively by its members, facilitators and RCM.

2.6.2 CWG meetings will be convened and conducted by the facilitator.

2.6.3 Meetings will be conducted in accordance with the ground rules adopted bythe CWG.

2.6.4 Each attending member of the CWG will have an equal voice in discussions, opinions, and recommendations undertaken at every meeting.

2.6.5 All statements and commitments made by CWG members, RCM, and the facilitators will be made in good faith.

2.6.6 Consensus is defined as "an opinion or position reached by a group as a whole" or "general agreement or accord." Consensus is often explained as "a decision that we can live with."

2.6.7 Recommendations and decisions made by the CWG will be made by a consensus of the attending members of the group. If a consensus is not possible or practical, a decision may be made by a majority vote of the attending members.

2.6.8 The facilitator will be responsible for keeping meeting notes and summaries and providing copies to the CWG members.

2.6.9 CWG meeting summaries will be compiled in final form by the facilitator and a summary will be distributed prior to the next meeting.

2.6.10 Agendas for upcoming CWG meetings will be distributed to the members prior to the meeting.

2.6.11 The facilitators will advocate for the fairness and integrity of the meeting process and for the CWG objectives.

2.7 Compensation.

Membership in the CWG is entirely voluntary by the participants.

2.8 Schedule of Meetings

2.8.1 CWG meetings will be scheduled and agreed upon by the group.

2.8.2 Locations and hours of meetings will be determined by a consensus of the CWG and facilitation team.

2.8.3 Separate issue-specific committee meetings may be held in addition tothe regular CWG meetings. Issue specific committees may be led by CWG members. The facilitator may support these meetings if desired.

2.9 Meeting Attendance

2.9.1 CWG members are expected to arrive at meetings on time.

2.9.2 CWG members are expected to attend at least two-thirds of the scheduled meetings unless special arrangements are made.

2.9.3 CWG members who cannot attend meetings on a consistent basis may be asked to relinquish their position and may be asked to suggest an alternate if they represent a stakeholder group.

2.10 Visitors

2.10.1 Meetings of the CWG will typically be open to the public, and the publicis welcome to attend as observers.

2.10.2 The public may make comments or ask questions of CWG members when invited to do so by the facilitator, or by the attending CWG members, orwhen there is a specific agenda item calling for public comment.\

2.10.3 Topic experts and guests may be invited to speak at meetings if the attending CWG members and facilitator agree that the guest's presence is pertinent to the issues being discussed.

2.11 Record Keeping

There shall be a record kept of all CWG meetings and this record shall constitute the official summary of such meetings. The official summary shall be available to the public, subject to prior approval by the CWG. The Parties also prepare a summary of each Relationship Committee meeting that is available to the public after its approval by the Relationship Committee.

2.12 Behavior and Conduct

2.12.1 Since the CWG is a voluntary group, it is important that individual CWG members abide by accepted standards of behavior.

2.12.2 CWG members are expected to treat each other with mutual courtesy, respect and dignity.

2.12.3 Unacceptable or disruptive behavior will not be tolerated.

2.12.4 Any CWG member who acts disrespectfully toward other members or disrupts the CWG process may be asked to leave or resign from the CWG.

2.12.5 CWG members are expected to listen respectfully to opinions and views that may differ from their own.

2.12.6 CWG members and guests are expected to listen carefully and speak honestly.

2.12.7 CWG members are expected to respect the views of others.

2.12.8 CWG members are expected to keep an open mind.

2.12.9 CWG members are expected to criticize ideas, not people.

2.12.10 CWG members are expected to allow all members to speak without dominating the conversation.

2.12.11 CWG members are expected to take responsibility for the success of each meeting.

2.13 **Resources**

2.13.1 The CWG may request additional assistance to better understand certain issues.

2.13.2 Assistance is available through a variety of resources, depending upon the subject of interest.

2.13.3 The facilitator will coordinate such support and assistance at the request of the group.

2.14 **Liability**

2.14.1 CWG members will act in the capacity of listening, understanding, deliberating and providing input to RCM.

2.14.2 Decisions and actions may be made by RCM based on CWG input and recommendations; however, CWG members will not be held responsible or liable for decisions or actions of RCM.

3.0 Relationship Committee

3.1 The Relationship Committee is a wholly included subset of the CWG. All of the other

sections of this Agreement apply to the Relationship Committee equally. The parts of this Section 3.0 are intended to guide the efforts of the Relationship Committee and set out rights and responsibilities of the Parties with respect to the Relationship Committee specifically

3.2 Scope/Objective

3.2.1 To oversee and implement the terms of this Good Neighbor Agreement;

3.2.2 To serve as the decision-making body on issues delegated to the Relationship Committee under this Agreement; and

3.2.3 To provide additional forums for resolving disputes and misunderstandings arising under various agreements between the Parties. However, nothing in this Agreement shall supersede contract language in previously executed or future contracts between the Parties.

3.2.4 Approve applications for membership in the CWG after nomination by the full CWG and hear requests for removal forwarded from the CWG.

3.3 Makeup

3.3.1 The Relationship Committee shall be comprised of six (6) voting members elected by the CWG. Three (3) additional members of the CWG will be elected as auxiliary (back-up) members to allow the Relationship Committee to meet with six (6) voting members.

3.3.2 Makeup of Relationship Committee: Members of the CWG are eligible to be elected by their peers to the Relationship Committee.

3.3.3 Appointment and Term

3.3.3.1 The CWG shall appoint the initial individuals to sit on the Relationship Committee within 30 days of the Effective Date of this Agreement.

3.3.3.2 Relationship committee members may serve no more than 3 consecutive years with one year off between terms.

3.3.4 Removal

The CWG may replace members of the Relationship Committee if the member fails to attend consecutive meetings of either the Relationship Committee or CWG.

3.4 Operating Procedures

3.4.1 Within 90 days of the formation of the Relationship Committee, the Relationship Committee shall meet to adopt bylaws by majority vote/consensus.

3.4.2 Within 90 days of the formation of the Relationship Committee, it shall establish meeting procedures and rules.

3.5 Meetings

The Relationship Committee shall meet at least twice a year, or more frequently as requested by the Parties, to maintain an open and transparent relationship as to the terms of this and other Agreements as needed and entered into by Parties of this Good Neighbor Agreement

3.6 Record Keeping

There shall be a record kept of all Relationship Committee meetings and this record shall constitute the official summary of such meetings. The summary shall be available to the public, subject to prior approval by the CWG and Relationship Committee. The Parties also prepare a summary of each Relationship Committee meeting that is available to the public after its approval by the Relationship Committee.

3.7 Decision-making, Dispute-resolution, Authority of the Relationship Committee

3.7.1 The Relationship Committee shall make decisions, recommendations, and take actions on issues arising from disputes under this Agreement and other agreements entered into by the Parties by majority vote. The Parties generally agree to abide by the decisions of the Relationship Committee but understand they are legally non-binding. Disputes concerning terms of any contracts between Parties of this Agreement may be settled as follows. However, nothing in this Agreement shall take precedence over settlement and resolution mechanisms as laid out in any individual contract or abridge the rights of Parties to enforce a contract by means of the judicial system.

3.7.1.1 Step One: The matter shall come before the Relationship Committee for discussion. The Relationship Committee shall issue a finding in the matter in which the Parties generally agree to abide.

3.7.1.2 Step Two: Any party to the dispute may seek mediation. The mediator shall either be agreed upon by the parties to the dispute or chosen by the Relationship Committee. Mediation costs shall be paid equally by the parties directly involved in the dispute.

4.0 Common Terms Applicable to Both the CWG and the Relationship Committee

4.1 Rights

The rights of the CWG and Relationship Committee representatives, within their respective groups, shall include, but are not limited to, the following:

4.1.1 The right to establish standing agenda items and the right to raise new agenda items when necessary.

4.1.2 The right to access information, subject to the limitations set forth in Sections **4.2** through 4.4.

4.1.3 The right to observe and engage in citizen sampling and observe scheduled Resolution Copper Sampling and Monitoring Events.

4.1.4 The right to call emergency meetings of the CWG with 72 hours' notice to each CWG member.

4.1.5 The right, with the consent of the majority of CWG members, to invite other representatives of the local community and/or local, regional, state or federal administrative agencies to CWG meetings and to provide them an opportunity to be heard within limits set by the CWG or its designated facilitator.

4.1.6 The right to be escorted to mine premises to inspect mine facilities subject to MSHA regulations and in compliance with all safety and fitness requirements of the project and MSHA. Generally, access will be provided between 8am and 4pm Monday through Friday excluding holidays. If an event on the mine site requires inspection outside of normal business hours, access will be granted unless this would compromise site safety. This right does not apply to tours or other invitation only events conducted onsite by Resolution Copper.

4.2 Information Sharing

Information Sharing is encouraged between Resolution Copper and all members of the CWG to advance transparency trust between Parties. Information sharing does not extend to Confidential Information (as defined below) as determined by Resolution Copper, in its sole and complete discretion.

4.3 Definition of Information

"Information" means "all data, sampling results, studies, reports, evaluations, plans, projects, audits, transcripts, and other Documents derived from or collected under this Agreement." All Information shall be part of the public domain and shall not be subject to any requirement of confidentiality or non- disclosure. Information does not include Confidential Information.

4.4 Confidential Information

4.4.1 "Confidential Information" shall include "Intellectual Property" and "Confidential Business Information," which shall be defined as follows:

4.4.2 "Intellectual Property" means trademarks, service marks, trade names, copyrights, mask works, moral rights, designs, inventions, patents, patent rights, trade secrets, know how, proprietary information and other intellectual property in any and all countries, unions, and jurisdictions and under any and all laws, regulations, treaties, conventions and agreements. Intellectual Property includes registrations of, and applications to register, copyrights, trademarks and service marks, and further includes patent applications.

4.4.3 "Confidential Business Information" means commercial, operational, geological and financial information that Resolution Copper designates as confidential, the disclosure of which is likely to cause substantial harm, in Resolution's judgment, to the competitive position of Resolution Copper and/or be subject to disclosure requirements related to publicly traded securities and regulatory oversite.

4.4.4 Resolution Copper shall have sole and complete discretion, not limited by anything in this Agreement or elsewhere, to determine what constitutes Confidential Information related to its business.

4.5 Copies

Resolution Copper shall provide the CWG with 3 (three) copies of all Information required to be disclosed to the CWG under this Section or, alternatively, with an electronic copy of such Information, if available.

4.6 Agreed Obligations and Commitments

4.6.1 The Parties agree to develop mutually beneficial short-term and "life of mine" agreements in the following thematic areas which the Parties recognize as being important and of mutual interest:

4.6.1.1 Mitigations as required by the Final Environmental Impact Statement;

4.6.1.2 Contributions and other community funding as approved through internal RCM contributions committee also known as "Social Investments"; and

4.6.1.3 Other funding outside 2.1.1 and 2.1.2 through contracted business arrangements;

4.6.1.4 This Agreement does not supersede, replace, modify or nullify any existing agreements or obligations currently in place between the Parties and all existing agreements remain in full force through the fulfilment or expiration of the agreement.

4.6.2 Development of agreements will be aligned and consistent with applicable laws, and other relevant binding commitments on RCM and subject to meeting applicable RCM and Rio Tinto standards, policies, requirements and guidelines found in the Communities and Social Performance Standard, Human Rights Standard, the Way We Work Code of Conduct, and Business Integrity Standards of Rio Tinto.

4.7 Previous and Existing RCM Contributions

4.7.1 The Parties acknowledge that RCM has contributed significant funds and other

benefits, prior to executing this Agreement.

4.7.2 The Parties acknowledge that significant work has been accomplished with said funding to many of the participants to this Agreement.

4.8 Term and Termination

4.8.1 This Agreement commences on the Commencement Date.

4.8.2 Any Party may withdraw from this Agreement at any time without affecting any other Party to the Agreement.

4.8.3 The Parties understand that in the event the Project is suspended, terminated, or cancelled, this Agreement shall be null and void.

4.9 Implementation

The Parties recognize the importance of implementing the principles, commitments and processes set out in this Agreement in an efficient and timely way to support this Agreement's aims and the Parties' relationship.

4.10 Notices

4.10.1 Any notice, demand, consent or other communication (Notice) required to be given to a Party under this Agreement must be in writing and will be deemed to have been duly given when it has been delivered by hand or mail, with postage or transmission charges fully prepaid, to the Party to which it is required to be given or made at such Party's address specified below (or such other address notified to the other Parties). If sent by mail, it is taken to have been received 5 Business Days after it is posted.

4.10.2 The address for Notice for each Party is as follows:

TOS: Town of Superior, PO Box 218, 199 N. Lobb Ave. Superior AZ

Resolution Copper Mining: Resolution Copper Mining, Manager - Communities, Box 1904, 102 Magma Heights, Superior, AZ 85173

Copy to: Rio Tinto Legal, c/o Resolution Copper Mining LLC, 426 N. 44th St., Ste. 320, Phoenix, AZ 85008

4.11 Miscellaneous

4.11.1 Entire Agreement

Except as provided for in this Agreement, this Agreement contains the entire agreement between the Parties about its subject matter and supersedes all prior discussions, negotiations, representations, warranties, understandings and agreements with respect thereto.

4.11.2 Relationship of the Parties

Nothing in this Agreement (including the establishment of the CWG or Relationship Committee) is intended to create, nor will it be construed as creating, any partnership, association, or any other obligation or liability with regard to the Parties except as expressly provided for in this Agreement.

4.11.3 Governing law

This Agreement will be governed by the laws of the State of Arizona.

4.11.4 Transparency and integrity

The Parties agree this Agreement will be carried out consistently with applicable anti-bribery, anti-corruption and similar business integrity laws and regulations and the Parties will promote policies and practices that seek to prevent violation of such laws and regulations and rules. The Parties acknowledge and agree to

comply with RCM's code of conduct, The Way We Work, and Business Integrity Standard, established as of September 1, 2023, each of which is available online at https://www.riotinto.com/sustainability/policies. The Parties shall report to RCM and the Relationship Committee all actual, alleged or suspected non-compliance with this Section and shall cooperate promptly and fully in any investigation of an alleged or suspected breach.

4.11.5 Amendment

4.11.5.1 Upon mutual consent recorded in writing, the Parties may make amendments to this Agreement from time to time.

4.11.5.2 If additional parties wish to become a Party to this Agreement, said party may do so by completing the following: (1) obtaining the approval of the Relationship Committee, (2) completing the addendum attached hereto as Appendix A, and (3) distributing the completed addendum to the members of the Relationship Committee.

4.11.6 Force Majeure

To the extent and for the period that a Party's ability to perform its obligations or commitments under this Agreement is affected by Force Majeure it will be excused and its obligations and commitments will be suspended provided it notifies the other Parties in writing setting out the details of the Force Majeure and its likely duration.

4.11.7 Severability

Any provision of this Agreement that is illegal, invalid or unenforceable will be severed to the extent necessary and this does not affect the legality, validity or enforceability of this Agreement or any other provision of this Agreement

Signing Pages

The Parties acknowledge and record their signature below to recognize this Good Neighbor Agreement and support its purpose and content.

Signed for and on behalf of **Resolution Copper Mining**

_____

Name: Victoria Peacey

Title: Vice President, Resolution Copper Mining

Date:

Signed for and on behalf of **Town of Superior**

_____

Name: Mila Besich

Title: Mayor, Town of Superior

Date:

Several entities and organizations, listed below, have been actively involved in the Community Working Group (CWG) of Superior. Those involved in the creation of this agreement are invited to sign.

Arizona Trail Association
Arizona Wildlife Federation
Boyce Thompson Arboretum
Cobra Valley Regional Medical Center
Copper Community Alliance
Queen Valley
Queen Valley Fire Department
Queen Valley Golf Association
Queen Valley Historic Society
Rebuild Superior Inc.
Superior Chamber of Commerce
Superior Optimist Club
Superior Unified School District
Top of the World
Town of Miami

Other governmental organizations, groups, entities and individuals who believe that they have a vested interest in this Agreement, are invited to consider their involvement and commitment.

Appendix A

Additional Parties Signature Page

Signing pages

The party below (the "Additional Party") requests to become a party to the Good Neighbor Agreement dated March 6, 2024 by and between the Town of Superior, Resolution Copper Mining LLC, and Pinal County (the "Agreement"). The Additional Party acknowledges and records its signature below to recognize, be bound by, and support the purposes and content of the Agreement. The Additional Party shall become a party to the Agreement upon completion of the following: (1) the Relationship Committee's vote of approval and (2) the Additional Party shall distribute this page, signed by a duly authorized individual, to the Relationship Committee members.

Signed for and on behalf of Pinal County _____

Name: Mike Goodman

Title: Chairman of the Board of Supervisors

Date: March 6, 2024

PINAL COUNTY
WIDE OPEN OPPORTUNITY

AGENDA ITEM

March 6, 2024 ADMINISTRATION BUILDING A
FLORENCE, ARIZONA

REQUESTED BY:

Funds #:

Dept. #:

Dept. Name: Housing

Director: Rolanda Cephas

BRIEF DESCRIPTION OF AGENDA ITEM AND REQUESTED BOARD ACTION:

Discussion/approval/disapproval of authorization to close the bank account for NSP3, which Pinal County Housing Authority no longer manages, and for authorization for the Clerk of the Board to sign a letter to inform the bank of said action. Banking institution is Wells Fargo. (Rolanda Cephas/Cathryn Whalen)

BRIEF DESCRIPTION OF THE FISCAL CONSIDERATIONS AND/OR EXPECTED FISCAL IMPACT OF THIS AGENDA ITEM:

The account balance will be transferred to FUND 223 under the Office of Budget and Finance to spend down with a Community Development Block Grant project, as approved by the US Department of Housing and Urban Development.

BRIEF DESCRIPTION OF THE EXPECTED PERFORMANCE IMPACT OF THIS AGENDA ITEM:

MOTION:

Approved as Presented

History

Time	Who	Approval
2/27/2024 2:33 PM	County Attorney	Yes
2/27/2024 2:39 PM	Grants/Hearings	Yes
2/27/2024 4:47 PM	Budget Office	Yes
2/27/2024 5:06 PM	County Manager	Yes
2/28/2024 9:06 AM	Clerk of the Board	Yes

ATTACHMENTS:

Click to download

No Attachments Available

PINAL COUNTY
WIDE OPEN OPPORTUNITY

AGENDA ITEM

March 6, 2024 ADMINISTRATION BUILDING A
FLORENCE, ARIZONA

REQUESTED BY:

Funds #: 223

Dept. #: 334

Dept. Name: Office of Budget and Finance

Director: Angeline Woods

BRIEF DESCRIPTION OF AGENDA ITEM AND REQUESTED BOARD ACTION:

Discussion/approval/disapproval of a Subrecipient Agreement between the Town of Florence and Pinal County, through the Pinal County Board of Supervisors beginning March 6, 2024, ending March 30, 2025, for $197,063. The Town of Florence has executed a Cooperative Agreement with Pinal County for the federal fiscal years of 2022-2024. As such, Pinal County will provide Community Development Block Grant funds to execute eligible activities in accordance with the Pinal County FFY2019-2023 Consolidated Plan. The Town of Florence will complete ADA-compliant improvements at the Senior Center and Heritage Park as approved by the Board of Supervisors in the FFY23 Annual Action Plan. (Heather Patel/Angeline Woods)

BRIEF DESCRIPTION OF THE FISCAL CONSIDERATIONS AND/OR EXPECTED FISCAL IMPACT OF THIS AGENDA ITEM:

The funding is included in the current budget and was appropriated to this program under the funding agreement approval process.

BRIEF DESCRIPTION OF THE EXPECTED PERFORMANCE IMPACT OF THIS AGENDA ITEM:

MOTION:

Approve as presented.

History

Time	Who	Approval
2/23/2024 9:09 AM	County Attorney	Yes
2/23/2024 9:29 AM	Budget Office	Yes
2/28/2024 11:25 AM	County Manager	Yes
2/28/2024 3:07 PM	Clerk of the Board	Yes

ATTACHMENTS:

Click to download

Agreement

SUBRECIPIENT AGREEMENT
BETWEEN
PINAL COUNTY
AND
TOWN OF FLORENCE
FOR
COMMUNITY DEVELOPMENT BLOCK GRANT PROGRAM
FISCAL YEAR: 2023

THIS SUBRECIPIENT AGREEMENT (this "**Agreement**") is dated the _____ day of _____, 202__, and is made by and between PINAL COUNTY, a political subdivision of the State of Arizona (the "**County**") and THE TOWN OF FLORENCE, a municipal corporation of the State of Arizona (the "**Subrecipient**"). The County and the Subrecipient are sometimes referred to herein individually as a "**Party**" and collectively as the "**Parties**".

RECITALS

WHEREAS, pursuant to Title I of the Housing and Community Development Act of 1974, as amended (the "**Act**") and applicable regulations of the United States Department of Housing and Urban Development ("**HUD**"), as amended (the "**Regulations**"), the County is a qualified urban county entitled to receive Community Development Block Grant ("**CDBG**") funding through HUD; and,

WHEREAS, the County has applied for and received funds from HUD under the Act; and,

WHEREAS, the County desires to engage the Subrecipient to assist the County in utilizing such funds; and,

WHEREAS, the Subrecipient is a unit of general local government under the Act and Regulations, and elected to participate with the County in the CDBG Entitlement funding program administered by the County (the "**Program**"); and,

WHEREAS, the County and the Subrecipient are parties to that certain Community Development Block Grant Cooperation and Coordination Agreement dated July 7, 2021 pursuant to which the Parties defined their rights and responsibilities under the Program pursuant to the requirements of the Act and Regulations, a copy of which is attached hereto as **Exhibit "A"** and incorporated herein by this reference (the "**CDBG Agreement**").

AGREEMENT

NOW, THEREFORE, it is agreed between the Parties as follows:

1. Activities. The Subrecipient will be responsible for implementing a CDBG eligible activity or project in a manner satisfactory to the County and consistent with any standards required as a condition of providing these funds. Such project will include the eligible activities under the CDBG program as set forth in **Exhibit "B"**.

2. Project Scope. The scope of the project is set forth in the attached **Exhibit "B"**. The County and the Subrecipient agree to cooperate in performing work necessary in connection with the completion of the project described therein (the "**Project**") and as provided in Section 4, below.

3. National Objectives. All activities funded with CDBG funds must meet one of the CDBG program's National Objectives to: (1) benefit low- and moderate-income persons; (2) aid in the prevention or elimination of slums or blight; or (3) meet community development needs having a particular urgency, as defined in 24 CFR § 570.208. The Subrecipient certifies that the activities carried out under this Agreement will meet one or more of these National Objectives as set forth in **Exhibit "B"**.

4. Parties' General Obligations.

    a. The County. The County shall be primarily responsible, after consultation with the Subrecipient, for ensuring compliance with all Federal, State and local laws, ordinances, rules, regulations and requirements applicable to the completion of the Project as indicated under 24 CFR Part 570. This shall include, but not be limited to, maintaining financial and other records documenting eligibility, provision of services, and the Subrecipient's expenses relative to the Project as a result of assistance provided through the CDBG program.

    b. The Subrecipient. The Subrecipient shall be primarily responsible, after consultation with the County, for all work in connection with the Project. The Subrecipient shall be responsible for compliance with all Federal, State and local laws, ordinances, rules, regulations and requirements applicable to the Project as indicated under 24 CFR Part 570. Duties include, but are not limited to: environmental compliance, procurement of applicable services, permitting, reporting, financial reporting, and construction management including inspections and Davis-Bacon Act compliance. Upon completion of the Project, the Subrecipient shall be solely responsible for the operation and maintenance of the Project.

5. Performance Monitoring. The County will monitor performance of the Subrecipient against goals and performance standards required herein. Substandard performance, as determined by the County, will constitute noncompliance with this Agreement. If action to correct such substandard performance is not taken by the Subrecipient within a reasonable period of time after being notified by the County, contract suspension or termination procedures will be initiated.

6. Funding and Project Budget. Funds provided for this project are in whole or in part through Title I of the Housing and Community Development Act of 1974, as amended, Community Development Block Grant funds CFDA#14.218. A detailed project budget and funding are included under **Exhibit "B"**.

    a. Pre-award Costs may be applicable and allowable under this project. Consultation with the County will be required.

    b. Program Income shall be returned to the County in accordance with 24 CFR § 570.504, Program income. The County shall retain the program income transfers of grant funds by the Subrecipient which shall be adjusted according to the principles described in paragraphs (b)(2)(i) and (ii) of 24 CFR 570.504. Any program income on hand when the CDBG

Agreement expires, or received after the CDBG Agreement's expiration, shall be paid to the County as required by 24 CFR § 570.503, Agreements with subrecipients.

c. Uniform requirements. The Subrecipient shall comply with applicable uniform requirements, as described in 24 CFR § 570.502, Applicability of uniform administrative requirements, regardless of whether the same are specifically referenced in this Agreement.

   i. Requirements for governmental agencies include, but may not be limited to: 2 CFR Part 200, "Uniform Administrative Requirements, Cost Principles, and Audit Requirements for Federal Awards", which incorporates OMB Circular A-87 Cost Principles for State, Local and Indian Tribal Governments; 24 CFR Part 85 Administrative Requirements for Grants and Cooperative Agreements to State, Local and Federally Recognized Indian Tribal Governments, as modified by 24 CFR § 570.502(a); and OMB Circular A-133 Audits of state and local governments and non-profit agencies.

   ii. Requirements for non-profit organizations include, but may not be limited to: 2 CFR Part 200, "Uniform Administrative Requirements, Cost Principles, and Audit Requirements for Federal Awards", which incorporates OMB Circular A-122 Cost principles for non-profit organizations, 24 CFR Part 84 Grants and agreements with non-profit organizations, and OMB Circular A-133 Audits of state and local governments and non-profit agencies.

7. Schedule of Completion. The effective dates of this Agreement are upon execution by the Chair of the Board of Supervisors and ends on March 30, 2025.

8. Insurance.

   a. The Subrecipient, shall and shall cause any of its subcontractors to purchase and maintain the herein stipulated minimum insurance from a company or companies duly licensed by the State of Arizona and possessing a current A.M. Best, Inc. rating of not less than A-6. In lieu of State of Arizona licensing, the stipulated insurance may be purchased from a company or companies who are authorized to do business in the State of Arizona, provided that said insurance companies meet the approval of the County. The form of any insurance policies and forms must be acceptable to the County.

   b. All insurance required herein shall be maintained in full force and effect until all work or service required to be performed under the terms of this Agreement is satisfactorily completed and formally accepted. Failure to do so may, at the sole discretion of the County, constitute a material breach of this Agreement.

   c. The Subrecipient's insurance shall be primary insurance as respects the County, and any insurance or self-insurance maintained by the County shall not contribute to it.

d. Any failure to comply with the claim reporting provisions of the insurance policies or any breach of an insurance policy warranty shall not affect coverage afforded under the insurance policies to protect the County.

e. The insurance policies may provide coverage that contains deductibles or self-insured retentions. Such deductible and/or self-insured retentions shall not be applicable with respect to the coverage provided to the County under such policies. The Subrecipient shall be solely responsible for the deductible and/or self-insured retention and the County, at its option, may require the Subrecipient to secure payment of such deductibles or self-insured retentions by a surety bond or an irrevocable and unconditional letter of credit.

f. The County reserves the right to request and to receive, within 10 working days, certified copies of any or all the herein required insurance certificates. The County shall not be obligated to review policies and/or endorsements or to advise the Subrecipient of any deficiencies in such policies and endorsements, and such receipt shall not relieve the Subrecipient from, or be deemed a waiver of the County's right to insist on strict fulfillment of the Subrecipient's obligations under this Agreement.

g. The insurance policies required by this Agreement shall name the County, its agents, representatives, officers, directors, officials and employees as Additional Insureds.

h. The policies required hereunder, shall contain a waiver of transfer of rights of recovery (subrogation) against the County, its agents, representatives, officers, directors, officials and employees for any claims arising out of the Subrecipient's work or service.

i. Coverage provided by the Subrecipient shall not be limited to the liability assumed under the indemnification provisions of this Agreement.

j. Commercial General Liability:

    i. Commercial General Liability (CGL) insurance and, if necessary, Commercial Umbrella insurance with a limit of not less than $2,000,000 for each occurrence, $2,000,000 Products/Completed Operations Aggregate, and $4,000,000 General Aggregate Limit. The policy shall include coverage for premises liability, bodily injury, broad form property damage, personal injury, products and completed operations and blanket contractual coverage, and shall not contain any provisions which would serve to limit third party action over claims. There shall be no endorsement or modifications of the CGL limiting the scope of coverage for liability arising from explosion, collapse, or underground property damage.

k. Workers' Compensation:

    i. Workers' Compensation insurance to cover obligations imposed by federal and state statutes having jurisdiction of the Subrecipient's employees engaged in the performance of the work or services under this Agreement; and Employer's Liability

insurance of not less than $1,000,000 for each accident, $1,000,000 disease for each employee, and $1,000,000 disease policy limit.

ii. The Subrecipient waives all rights against the County and its agents, officers, directors and employees for recovery of damages to the extent these damages are covered by the Workers' Compensation and Employer's Liability or commercial umbrella liability insurance obtained by the Subrecipient pursuant to this Agreement.

l. Automobile Liability: Commercial/Business Automobile Liability insurance with a combined single limit for bodily injury and property damage of not less than $1,000,000 each occurrence with respect to any of the Subrecipient owned, hired, and non-owned vehicles assigned to or used in performance of the Subrecipient's work or services under this contract.

The policy shall be endorsed to include the County, its agents, representatives, officers, directors, officials and employees as Additional Insureds with respect to liability arising out of the activities performed by or on behalf of the Subrecipient, involving automobiles owned, leased, hired and/or non-owned by the Subrecipient, and shall insure the County to the full limits of liability purchased by the Subrecipient even if those limits of liability are in excess of the minimum limits required by this contract.

The policy shall contain a waiver of transfer of rights of recovery (subrogation) against the County, its agents, representatives, officers, directors, officials and employees for any claim arising out of the Subrecipient's work or service."

m. Builder's Risk (Property) Insurance, if scope of work includes building or renovating structures.

i. The Subrecipient shall purchase and maintain, on a replacement cost basis, Builders' Risk insurance in the amount of the initial CDBG Agreement amount as well as subsequent modifications thereto for the entire work at the site. Such Builders' Risk insurance shall be maintained until final payment has been made or until no person or entity other than the County has an insurable interest in the property required to be covered, whichever is earlier. This insurance shall name the County, the Subrecipient and all of the Subrecipient's subcontractors and sub-subcontractors as insured on the policy. For new construction projects, the Subrecipient agrees to assume full responsibility for loss or damage to the work being performed and to the structures under construction. For renovation construction projects, the Subrecipient agrees to assume responsibility for loss or damage to the work being performed at least up to the full CDBG Agreement amount, unless otherwise required by this Agreement documents or amendments thereto.

ii. Builders' Risk insurance shall be on a Special Causes of Loss form and shall also cover false work and temporary buildings and shall insure against risk of direct physical loss or damage from external causes including debris removal, demolition occasioned by enforcement of any applicable legal requirements, and shall cover

reasonable compensation for architect's service and expenses required as a result of such insured loss and other "soft costs" as required by the CDBG Agreement.

iii. Builders' Risk insurance must provide coverage from the time any covered property comes under the Subrecipient's control and/or responsibility, and continue without interruption during construction, renovation, or installation, including any time during which the covered property is being transported to the construction installation site, and while on the construction or installation site awaiting installation. The policy will provide coverage while the covered premises or any part thereof are occupied. Policy must contain a waiver of subrogation against the County.

iv. If the CDBG Agreement requires testing of equipment or other similar operations, at the option of the County, the Subrecipient will be responsible for providing property insurance for these exposures under a Boiler Machinery insurance policy or the Builders' Risk Insurance policy.

n. Certificates of Insurance:

i. Upon execution of the CDBG Agreement, the Subrecipient shall and shall cause any of its subcontractors to furnish the County with valid and complete certificates of insurance, or formal endorsements as required by the CDBG Agreement, issued by the Subrecipient's insurer(s), as evidence that policies providing the required coverage, conditions and limits required by this Agreement are in full force and effect. Such certificates shall identify this Agreement name and title.

ii. Prior to commencing work or services under this Agreement, the Subrecipient shall have insurance in effect as required by the CDBG Agreement in the form provided by the County, issued by the Subrecipient's insurer(s), as evidence that policies providing the required coverage, conditions and limits required by this Agreement are in full force and effect. Such certificates shall be made available to the County upon ten (10) business days.

iii. In the event any insurance policy(ies) required by this Agreement is (are) written on a "claims made" basis, coverage shall extend for two years past completion and acceptance of the Subrecipient's work or services and as evidenced by annual Certificates of Insurance.

iv. If a policy does expire during the life of the CDBG Agreement, a renewed Certificate of Insurance must be sent to the County forty-five (45) days prior to the expiration date.

o. Cancellation and Expiration Notice:

i. Insurance required herein shall not be permitted to expire, be canceled, or materially changed without thirty (30) days prior written notice to the County.

ii. If the Subrecipient or the Subrecipient's contractors provide professional or semi-professional personal services under this Agreement for which malpractice or professional liability coverage is available, such as medical, psychiatric, architects, licensed trades or legal services, the Subrecipient or the Subrecipient's contractors shall carry minimum liability coverage of $2,000,000 each occurrence and provide the County with proof of coverage.

p. Subcontractors: The Subrecipient's certificate(s) shall include all subcontractors as insureds under its policies or the Subrecipient shall furnish to the County separate certificates for each subcontractor. All coverages for subcontractors shall be subject to the minimum requirements identified above.

q. Approval: Any modification or variation from the insurance requirements of this Agreement must have prior approval from the County whose decision shall be final. Such action will not require a formal agreement amendment but may be made by administrative action.

r. Exceptions: In the event the Subrecipient is a public entity, the Subrecipient shall provide a Certificate of Self-Insurance or a Certificate of Proof of Pool Insurance to comply with proof of coverage.

9. Suspension and Termination. This Agreement shall remain in force and effect until completion of the Project or by the Schedule of Completion date in Section 7 above, whichever comes first, and shall comply with the applicable noncompliance, suspension, and termination requirements, in accordance with 2 CFR Part 200, Subpart D §§ 200.339-343. Consistent therewith, the County may suspend or terminate this Agreement if the Subrecipient fails to comply with any terms of this Agreement, which include, but are not limited to, the following:

a. Failure to comply with any of the rules, regulations or provisions referred to herein, or such statutes, regulations, executive orders, and HUD guidelines, policies or directives as may become applicable at any time;

b. Failure, for any reason, of the Subrecipient to fulfill in a timely and proper manner its obligations under this Agreement;

c. Ineffective or improper use of funds provided under this Agreement; or

d. Submission by the Subrecipient to the County reports that are incorrect or incomplete in any material respect.

The Subrecipient further specifically agrees to comply with the schedule included in **Exhibit "B"**. Failure to demonstrate timely substantial completion of the project may result in recapture of funds. Substantial completion is defined as having requested a minimum of 50% reimbursement from the County, the Project is on target for completion by the completion date in Section 7, and all documentation has been submitted to the County and has been deemed accurate and complete. Documentation includes but is not limited to quarterly reporting and labor standard documentation.

The Subrecipient further specifically agrees the Project may be cancelled and funds recaptured if the Project has been determined to not comply with this Agreement, the Application submitted, and the environmental review record completed.

10. General Compliance. The Subrecipient agrees to comply with the requirements of Title 24 of the Code of Federal Regulations, Part 570 (the U.S. Housing and Urban Development regulations concerning Community Development Block Grants (CDBG)), including Subpart K, except that:

    a. The Subrecipient does not assume the County's environmental responsibilities described in 24 CFR § 570.604; and

    b. The Subrecipient does not assume the County's responsibility for initiating the review process under the provisions of 24 CFR Part 52. The Subrecipient also agrees to comply with all other applicable Federal, state and local laws, regulations, and policies governing the funds provided under this contract. The Subrecipient further agrees to utilize funds available under this Agreement to supplement rather than supplant funds otherwise available.

11. Environmental Review. In accordance with 24 CFR Parts 50 and 58, an environmental review of each project carried out with federal funds must be completed. Completion of the review and receipt of a release of funds is required prior to expending funds.

12. Davis-Bacon and Related Acts. This project shall comply with the federal prevailing wage requirements as applicable under 24 CFR § 570.603 and the U.S. Department of Housing and Urban Development Davis-Bacon and Labor Standards Office.

13. Procurement. This project shall comply with the Federal, State and County Procurement Policy to ensure a fair and open procurement process which encourages participation from small and disadvantaged businesses including minority and women owned businesses in accordance with 2 CFR Part 200.

    a. Compliance: The Subrecipient shall comply with current County policy concerning the purchase of equipment and shall maintain inventory records of all non-expendable personal property as defined by such policy as may be procured with funds provided herein. All program assets (unexpended program income, property, equipment, etc.) shall revert to the County upon termination of this Agreement.

    b. Standards: Unless specified otherwise within this Agreement, the Subrecipient shall procure all materials, property, or services in accordance with the requirements of 2 CFR Part 200 Subpart D.

    c. Construction Materials: The Build America, Buy America Act (BABA), enacted as part of the Infrastructure Investment and Jobs Act on November 15, 2021, established a domestic content procurement preference for all Federal financial assistance obligated for infrastructure projects after May 14, 2022. The domestic content procurement preference

requires that all iron, steel, manufactured products, and construction materials used in covered infrastructure projects are produced in the United States. Unless an effective waiver of BABA Provisions as applied to Recipients of HUD Federal Financial Assistance applies to this Agreement, the Subrecipient shall procure all iron, steel, manufactured products, and construction materials in accordance with BABA. As of November 23, 2022, HUD issued a departmentwide public interest De Minimis and Small Grants waiver to the Buy America Domestic Content Procurement Preference (Buy America Preference or BAP) as applied to the iron, steel, manufactured products, and construction materials requirement of BABA for recipients of Federal Financial Assistance for infrastructure projects whose total cost (including HUD funding and funding from any other source) is an amount equal to or less than the 2 CFR § 200.1 Simplified acquisition threshold, which is currently $250,000.

d. Travel: The Subrecipient shall obtain written approval from the County for any travel outside the County and Phoenix metropolitan area with funds provided under this Agreement.

e. All contractors and subcontractors performing work under this Agreement shall be registered in SAM.gov in order to verify if they are debarred or suspended from doing business with the federal government.

f. The Subrecipient shall comply with the requirements of the Federal Funding Accountability and Transparency Act (FFATA). Subrecipients with federal grant awards greater than or equal to $25,000 as of October 1, 2010 are subject to FFATA sub-award reporting requirements as outlined in the Office of Management and Budget guidance issued August 27, 2010. The County is required to file a FFATA report by the end of the month following the month in which the Subrecipient awards any contract greater than or equal to $25,000. This is required for all contractors and subcontractors awarded under this Agreement.

   Information to be collected and provided to the County for each contract includes:

   i. Date of executed agreement for all construction and subcontractor contracts)
   ii. Unique Entity Identifier/Unique Entity ID
   iii. Agency name and address
   iv. Contract amount
   v. Project description
   vi. Location of performance

14. Other program requirements.

   a. In addition to other certifications made throughout the body of this Agreement, the Subrecipient acknowledges and certifies compliance with the certifications included under **Exhibits "D" and "E"**.

15. Use and Reversion of Assets. The use and disposition of real property and equipment under this Agreement shall be in compliance with the requirements of 2 CFR Part 200 and 24 CFR §§ 570.502, 570.503, and 570.504, as applicable, which include, but are not limited to, the following:

    a. The Subrecipient shall transfer to the County any CDBG funds on hand and any accounts receivable attributable to the use of funds under this Agreement at the time of expiration, cancellation, or termination.

    b. Real property under the Subrecipient's control that was acquired or improved, in whole or in part, with funds under this Agreement in excess of $25,000 shall be used to meet one of the CDBG National Objectives pursuant to 24 CFR § 570.208 until ten (10) years after expiration of this Agreement (or such longer period of time as the County deems appropriate). If the Subrecipient fails to use CDBG-assisted real property in a manner that meets a CDBG National Objective for the prescribed period of time, the Subrecipient shall pay the County an amount equal to the current fair market value of the property less any portion of the value attributable to expenditures of non-CDBG funds for acquisition of, or improvement to, the property. Such payment shall constitute program income to the County. The Subrecipient may retain real property acquired or improved under this Agreement after the expiration of the five-year period (or such longer period of time as the County deems appropriate).

    c. In all cases in which equipment acquired, in whole or in part, with funds under this Agreement is sold, the proceeds shall be program income (prorated to reflect the extent to that funds received under this Agreement were used to acquire the equipment). Equipment not needed by the Subrecipient for activities under this Agreement shall be (a) transferred to the County for the CDBG program or (b) retained after compensating the County an amount equal to the current fair market value of the equipment less the percentage of non-CDBG funds used to acquire the equipment.

16. Relocation, real property acquisition and one-for-one housing replacement.

    a. As applicable to the activities contemplated hereby, the Subrecipient agrees to comply with (a) the Uniform Relocation Assistance and Real Property Acquisition Policies Act of 1970, as amended (URA), and implementing regulations at 49 CFR Part 24 and 24 CFR § 570.606(b); (b) the requirements of 24 CFR § 570.606(c) governing the Residential Anti-displacement and Relocation Assistance Plan under section 104(d) of the Housing and Community Development Act (HCD); and (c) the requirements in 24 CFR § 570.606(d) governing optional relocation policies. The Subrecipient shall provide relocation assistance to displaced persons as defined by 24 CFR § 570.606(b)(2) that are displaced as a direct result of acquisition, rehabilitation, demolition or conversion for a CDBG-assisted project. The Subrecipient also agrees to comply with applicable County ordinances, resolutions and policies concerning the displacement of persons from their residences.

17. Drug Free Workplace. As applicable to the Project, the Subrecipient will provide a drug-free workplace. The Subrecipient shall comply with the Drug-Free Workplace Act of 1988 and implementing regulations in 2 CFR Part 2429 regarding maintenance of a drug-free workplace. The

Subrecipient shall comply with the "Certification Regarding Drug-Free Workplace Requirements" attached hereto as **Exhibit "E"**. The Subrecipient shall ensure that the provisions of the clauses in **Exhibit "E"** are included in all third party contracts, subcontracts, and purchase orders that exceed ten thousand dollars ($10,000), so that the provisions will be binding upon each subcontractor or vendor.

18. Financial Management. Accounting Standards: The Subrecipient agrees to comply with 2 CFR Part 200 and agrees to adhere to the accounting principles and procedures required therein, utilize adequate internal controls, and maintain necessary source documentation for all costs incurred.

19. Documentation and Record Keeping.

    a. Records to be maintained: The Subrecipient shall maintain all records required by the Federal regulations specified in 24 CFR § 570.506 that are pertinent to the activities to be funded under this Agreement. Such records shall include, but not be limited to:

        i. Records providing a full description of each activity undertaken;

        ii. Records demonstrating that each activity undertaken meets one of the National Objectives of the CDBG program;

        iii. Records required to determine the eligibility of activities;

        iv. Records required to document the acquisition, improvement, use or disposition of real property acquired or improved with CDBG assistance;

        v. Records documenting compliance with the fair housing and equal opportunity components of the CDBG program;

        vi. Financial records as required by 24 CFR § 570.502, and 24 CFR § 84.21-28;

        vii. Other records necessary to document compliance with Subpart K of 24 CFR Part 570; and

        viii. Records outlined in the CDBG Application and Forms document available at: https://www.pinal.gov/grants.

    b. Retention: The Subrecipient shall retain all financial records, supporting documents, statistical records, and all other records pertinent to the CDBG Agreement program income for a period of five (5) years. The retention period begins on the date of the submission of the County's annual performance and evaluation report to HUD in which the activities assisted under the CDBG Agreement are reported on for the final time. Notwithstanding the above, if there is litigation, claims, audits, negotiations or other actions that involve any of the records cited and that have started before the expiration of the five-year period, then such records must be retained until completion of the actions and resolution of all issues, or the expiration of the five-year period, whichever occurs later.

c. Client Data: The Subrecipient shall maintain client data demonstrating client eligibility for services provided. Such data shall include, but not be limited to, client name, address, income level or other basis for determining eligibility, and description of service provided. Such information shall be made available to the County's monitors or its designees for review upon request.

d. Disclosure: The Subrecipient understands client information collected under this contract is private and the use or disclosure of such information, when not directly connected with the administration of the County's or the Subrecipient's responsibilities with respect to services provided under this contract unless written consent is obtained from such person receiving service and, in the case of a minor, that of a responsible parent/guardian.

e. Close-outs: The Subrecipient's obligation to the County shall not end until all close-out requirements are completed. Activities during this close-out period shall include, but are not limited to: making final payments, disposing of program assets (including the return of all unused materials, equipment, unspent cash advances, program income balances, and accounts receivable to the County), and determining the custodianship of records. Notwithstanding the foregoing, the terms of this Agreement shall remain in effect during any period the Subrecipient has control over CDBG funds, including program income.

f. Audits & Inspections: All of the Subrecipient's records with respect to any matters covered by this Agreement shall be made available to the County, HUD, and the Comptroller General of the United States or any of their authorized representatives, at any time during normal business hours, as often as deemed necessary, to audit, examine, and make excerpts or transcripts of all relevant data. Any deficiencies noted in audit reports must be fully cleared by the Subrecipient within 30 days after receipt by the Subrecipient. Failure of the Subrecipient to comply with the above audit requirements will constitute a violation of this contract and may result in the withholding of future payments. The Subrecipient hereby agrees to have an annual agency audit conducted in accordance with current County policy concerning subrecipient audits and OMB Circular A-133.

20. Reporting and Payment Procedures.

a. Program Income: The Subrecipient shall report quarterly all program income (as defined at 24 CFR § 570.500(a)) generated by activities carried out with CDBG funds made available under this Agreement. The use of program income by the Subrecipient shall comply with the requirements set forth at 24 CFR § 570.504. By way of further limitations, the Subrecipient may only use such income under this Agreement for activities permitted under this Agreement and shall reduce requests for additional funds by the amount of any such program income balances on hand. All unexpended program income shall be returned to the County at the end of the contract period. Any interest earned on cash advances from the U.S. Treasury and from funds held in a revolving fund account is not program income and shall be remitted promptly to the County.

b. Indirect Costs: If indirect costs are charged, the Subrecipient shall provide documentation of its indirect cost rate, as approved by its cognizant agency. If an approved indirect cost rate is not available, the Subrecipient will develop an indirect cost allocation plan for determining the Subrecipient's appropriate share of administrative costs and shall submit such plan to the County for approval, in a form specified by the County.

c. Payment Procedures: The County will pay to the Subrecipient funds available under this Agreement based upon information submitted by the Subrecipient and consistent with any approved budget and County policy concerning payments. With the exception of certain advances, payments will be made for eligible expenses actually incurred by the Subrecipient, and not to exceed actual cash requirements. Payments will be adjusted by the County in accordance with advance fund and program income balances available in the Subrecipient's accounts. In addition, the County reserves the right to liquidate funds available under this Agreement for costs incurred by the County on behalf of the Subrecipient.

d. Progress Reports: The Subrecipient shall submit quarterly progress reports to the County in the form, content, and frequency as required by the County to ensure compliance and timeliness. Specific reporting data points are included under **Exhibit "C".**

21. County Recognition. The Subrecipient shall insure recognition of the role of the County in providing services through this Agreement. All activities, facilities and items utilized pursuant to this Agreement shall be prominently labeled as to funding source. In addition, the Subrecipient will include a reference to the support provided herein in all publications made possible with funds made available under this Agreement.

22. Representations and Warranties.

a. The Parties warrant that they are in compliance with the Federal Immigration and Nationality Act (FINA) and all other Federal immigration laws and regulations related to the immigration status of their employees and warrant they are in compliance with A.R.S. § 23-214A which requires e-verification of each employee's legal employability after they are employed.

b. The Parties agree that all contracts awarded to contractors in connection with the Project shall include a provision stating that the contractor understands and acknowledges that contractor must comply with the Americans and Disabilities Act, The Immigration Reform and Control Act of 1986, the Drug Free Workplace Act of 1989, A.R.S. §34-301; A.R.S. §34-302; A.R.S. §41-4401 and A.R.S. §23-214(A), listed on the SAM.gov website, not listed on the excluded parties list, and that the contractor shall include this provision in any contract the contractor enters into with any and all of its subcontractors who provide services under any contract awarded to contractor by the County or the Subrecipient for the Project.

c. The Parties agree that all contracts awarded to contractors and/or subcontractors in connection with the work to be performed under this Agreement shall include the following provisions:

   i. The contractor, or subcontractor, whichever is applicable, warrants its compliance with all federal immigration laws and regulations relating to its employees and its compliance with A.R.S. § 23-214A.

   ii. A breach of warranty under paragraph (i) above shall constitute a material breach of the contract and is subject to penalties up to and including termination of the contract.

   iii. Pursuant to the provisions of A.R.S. § 41-4401, the contractor or subcontractor, whichever is applicable, warrants compliance with the Federal Immigration and Nationality Act (FINA) and all other Federal immigration laws and regulations related to the immigration status of its employees and A.R.S. § 23-214 which requires verification of each employee's legal employability, after they are employed, using the e-verify program. Contractor and/or subcontractor shall obtain statements from their employees and subcontractors certifying compliance and shall furnish the statements to the County or the Subrecipient, as applicable. The County or the Subrecipient, at their sole discretion, may conduct random verifications of employment records of the contractor and any subcontractors to ensure compliance. The contractor agrees to assist in performing any such random verifications. These certifications shall remain in effect through the term of the contract. The contractor and subcontractors shall also maintain Employment Eligibility Verification forms (I-9) as required by the U.S. Department of Labor's Immigration and Control Act, for all employees performing work under the contract.

   iv. Any and all Federal, State and local contractual requirements including, without limitation, those relating to remedies, termination, employment, labor, records, environment and energy.

d. Civil Rights.

   i. Compliance: The Subrecipient agrees to comply with the State of Arizona Civil Rights laws and with Title VI of the Civil Rights Act of 1964 as amended, Title VIII of the Civil Rights Act of 1968 as amended, Section 104(b) and Section 109 of Title I of the Housing and Community Development Act of 1974 as amended, Section 504 of the Rehabilitation Act of 1973, the Americans with Disabilities Act of 1990, the Age Discrimination Act of 1975, Executive Order 11063, and Executive Order 11246 as amended by Executive Orders 11375, 11478, 12107, and 12086.

   ii. Nondiscrimination: The Subrecipient agrees to comply with the non-discrimination in employment and contracting opportunities laws, regulations, and executive orders referenced in 24 CFR § 570.607, as revised by Executive Order 13279. The applicable non-discrimination provisions in Section 109 of the Act are still

applicable.

iii. Land Covenants: This Agreement is subject to the requirements of Title VI of the Civil Rights Act of 1964 (42 U.S.C. 200d *et seq.* and implementing regulations in 24 CFR Part 1) and 24 CFR §§ 570.601 and 570.602. In regard to the sale, lease, or other transfer of land acquired, cleared or improved with assistance provided under this Agreement, the Subrecipient shall cause or require a covenant running with the land to be inserted in the deed or lease for such transfer, prohibiting discrimination as herein defined, in the sale, lease or rental, or in the use or occupancy of such land, or in any improvements erected or to be erected thereon, providing that the County and the United States are beneficiaries of and entitled to enforce such covenants. The Subrecipient, in undertaking its obligation to carry out the program assisted hereunder, agrees to take such measures as are necessary to enforce such covenant, and will not itself so discriminate.

iv. Section 504: The Subrecipient agrees to comply with all Federal regulations issued pursuant to compliance with Section 504 of the Rehabilitation Act of 1973, as amended (29 U.S.C. 794), which prohibits discrimination on the basis of disability in programs that receive Federal financial assistance. The County shall provide the Subrecipient with any guidelines necessary for compliance with that portion of the regulations in force during the term of this Agreement.

v. Americans with Disabilities Act. Subrecipient will comply with all applicable provisions of the Americans with Disabilities Act (Public Law 101-336, 42 U.S.C. §§ 12101-12213) and all applicable federal regulations under the Act, including 28 CFR parts 35 and 36.

e. Affirmative Action.

i. Approved Plan: The Subrecipient agrees that it shall be committed to carry out pursuant to the County's specifications an Affirmative Action Program in keeping with the principles as provided in President's Executive Order 11246 of September 24, 1966. The County shall provide Affirmative Action guidelines to the Subrecipient to assist in the formulation of such program. The Subrecipient shall submit a plan for an Affirmative Action Program for approval prior to the award of funds.

ii. Women- and Minority-Owned Businesses (W/MBE): The Subrecipient will use its best efforts to afford small businesses, minority business enterprises, and women's business enterprises the maximum practicable opportunity to participate in the performance of this Agreement. As used in this Agreement, the terms "small business" means a business that meets the criteria set forth in section 3(a) of the Small Business Act, as amended (15 U.S.C. 632), and "minority and women's business enterprise" means a business at least fifty-one (51) percent owned and controlled by minority group members or women. For the purpose of this definition, "minority group members" are Afro- Americans, Spanish-speaking, Spanish

surnamed or Spanish-heritage Americans, Asian- Americans, and American Indians. The Subrecipient may rely on written representations by businesses regarding their status as minority and women business enterprises in lieu of an independent investigation.

iii. Access to Records. The Subrecipient shall furnish and cause each of its own subrecipients or subcontractors to furnish all information and reports required hereunder and will permit access to its books, records and accounts by the County, HUD or its agent, or other authorized Federal officials for purposes of investigation to ascertain compliance with the rules, regulations and provisions stated herein.

iv. Notifications. The Subrecipient will send to each labor union or representative of workers with which it has a collective bargaining agreement or other contract or understanding, a notice, to be provided by the agency contracting officer, advising the labor union or worker's representative of the Subrecipient's commitments hereunder, and shall post copies of the notice in conspicuous places available to employees and applicants for employment.

v. Equal Employment Opportunity, Civil Rights, and Affirmative Action (EEO/AA) Statement: The Subrecipient will, in all solicitations or advertisements for employees placed by or on behalf of the Subrecipient, state that it is an Equal Opportunity or Affirmative Action employer.

vi. Subcontract Provisions. The Subrecipient will include the provisions of Sections 22(d), Civil Rights, and 22(e), Affirmative Action, in every subcontract or purchase order, specifically or by reference, so that such provisions will be binding upon each of its own subrecipients or subcontractors.

f. Except as otherwise provided under 41 CFR Part 60, all contracts that meet the definition of "federally assisted construction contract" in 41 CFR § 60-1.3 must include the equal opportunity clause provided under 41 CFR § 60-1.4(b), in accordance with Executive Order 11246, Equal Employment Opportunity (30 Fed. Reg. 12319, 12935, 3 CFR Part, 1964-1965 Comp., p. 339), as amended by Executive Order 11375, Amending Executive Order 11246 Relating to Equal Employment Opportunity, and implementing regulations at 41 CFR Part 60 (Office of Federal Contract Compliance Programs, Equal Employment Opportunity, Department of Labor). *See* 2 CFR Part 200, Appendix II(C).

g. During the performance of this Agreement, the Subrecipient agrees as follows:

i. The Subrecipient will not discriminate against any employee or applicant for employment because of race, color, national origin (including limited English proficiency), religion, disability, age, sex, sexual orientation, or gender identity. The Subrecipient will take affirmative action to ensure that applicants are employed, and that employees are treated during employment without regard to their race, color, national origin (including limited English proficiency), religion, disability, age, sex, sexual orientation, or gender identity. Such action shall include, but not be limited

to the following: employment, upgrading, demotion, or transfer; recruitment or recruitment advertising; layoff or termination; rates of pay or other forms of compensation; and selection for training, including apprenticeship. They agree to post in conspicuous places, available to employees and applicants for employment, notices to be provided setting forth the provisions of this nondiscrimination clause.

ii. The Subrecipient will, in all solicitations or advertisements for employees placed by or on behalf of the Subrecipient, state that all qualified applicants will receive consideration for employment without regard to race, color, national origin (including limited English proficiency), religion, disability, age, sex, sexual orientation, or gender identity.

h. Employment Restrictions.

i. Prohibited Activity: The Subrecipient is prohibited from using funds provided herein or personnel employed in the administration of the program for: political activities; inherently religious activities; lobbying; political patronage; and nepotism activities.

ii. Labor Standards: The Subrecipient agrees to comply with the requirements of the Secretary of Labor in accordance with the Davis-Bacon Act as amended, the provisions of Contract Work Hours and Safety Standards Act (40 U.S.C. 327 *et seq.*) and all other applicable Federal, state and local laws and regulations pertaining to labor standards insofar as those acts apply to the performance of this Agreement. The Subrecipient agrees to comply with the Copeland Anti- Kick Back Act (18 U.S.C. 874 *et seq.*) and its implementing regulations of the U.S. Department of Labor at 29 CFR Part 5. The Subrecipient shall maintain documentation that demonstrates compliance with hour and wage requirements of 29 CFR Part 5. Such documentation shall be made available to the County for review upon request.

The Subrecipient agrees that, except with respect to the rehabilitation or construction of residential property containing less than eight (8) units, all contractors engaged under contracts in excess of $2,000.00 for construction, renovation or repair work financed in whole or in part with assistance provided under this contract, shall comply with Federal requirements adopted by the County pertaining to such contracts and with the applicable requirements of the regulations of the Department of Labor, under 29 CFR Parts 1, 3, 5 and 7 governing the payment of wages and ratio of apprentices and trainees to journey workers; provided that, if wage rates higher than those required under the regulations are imposed by state or local law, nothing hereunder is intended to relieve the Subrecipient of its obligation, if any, to require payment of the higher wage. The Subrecipient shall cause or require to be inserted in full, in all such contracts subject to such regulations, provisions meeting the requirements of this paragraph.

i. "Section 3" Clause.

i. Compliance: Compliance with the provisions of Section 3 of the HUD Act of 1968, as amended, and as implemented by the regulations set forth in 24 CFR Part 75, and all applicable rules and orders issued hereunder prior to the execution of this contract, shall be a condition of the Federal financial assistance provided under this contract and binding upon the County, the Subrecipient and any of the Subrecipient's subcontractors. Failure to fulfill these requirements shall subject the County, the Subrecipient and any of the Subrecipient's subcontractors, their successors and assigns, to those sanctions specified by the CDBG Agreement through which Federal assistance is provided. The Subrecipient certifies and agrees that no contractual or other disability exists that would prevent compliance with these requirements.

The Subrecipient further agrees to comply with these "Section 3" requirements and to include the following language in all subcontracts executed under this Agreement:

> "The work to be performed under this Agreement is subject to the requirements of Section 3 of the Housing and Urban Development Act of 1968, as amended, 12 U.S.C. 1701u (Section 3). The purpose of Section 3 is to ensure that the employment and other economic opportunities generated by HUD assistance or HUD-assisted projects covered by Section 3, shall, to the greatest extent feasible, be directed to low - and very low-income persons in the project area, and that contracts for work in connection with the project be awarded to business concerns that provide economic opportunities for low- and very low-income persons residing in the metropolitan area where the project is located."

The Subrecipient further agrees to ensure that opportunities for training and employment arising in connection with a housing rehabilitation (including reduction and abatement of lead-based paint hazards), housing construction, or other public construction project are given to low- and very low-income persons residing within the metropolitan area in which the CDBG-funded project is located; where feasible, priority should be given to low- and very low-income persons within the service area of the project or the neighborhood in which the project is located, and to low- and very low-income participants in other HUD programs; and award contracts for work undertaken in connection with a housing rehabilitation (including reduction and abatement of lead-based paint hazards), housing construction, or other public construction project to business concerns that provide economic opportunities for low- and very low-income persons residing within the metropolitan area in which the CDBG-funded project is located; where feasible, priority should be given to business concerns that provide economic opportunities to low- and very low-income residents within the service area or the neighborhood in which the project is located, and to low- and very low-income participants in other HUD programs

The Parties to this Agreement agree to comply with HUD's regulations in 24 CFR Part 75, which implement Section 3. As evidenced by their execution of this Agreement, the Parties to this Agreement certify that they are under no contractual or other impediment that would prevent them from complying with 24 CFR Part 75 regulations.

ii. Notifications. The Subrecipient agrees to send to each labor organization or representative of workers with which it has a collective bargaining agreement or other contract or understanding, if any, a notice advising said labor organization or worker's representative of its commitments under this Section 3 clause and shall post copies of the notice in conspicuous places available to employees and applicants for employment or training.

iii. Subcontracts. The Subrecipient will include this Section 3 clause in every subcontract and will take appropriate action pursuant to the subcontract upon a finding that the subcontractor is in violation of regulations issued by HUD. The Subrecipient will not subcontract with any entity where it has notice or knowledge that the latter has been found in violation of regulations under 24 CFR Part 135 and will not let any subcontract unless the entity has first provided it with a preliminary statement of ability to comply with the requirements of these regulations.

23. Conduct.

a. Assignability. The Subrecipient shall not assign or transfer any interest in this Agreement without the prior written consent of the County; provided, however, that claims for money due or to become due to the Subrecipient from the County under this Agreement may be assigned to a bank, trust company, or other financial institution without such approval. Notice of any such assignment or transfer shall be furnished promptly to the County.

b. Subcontracts.

i. Approvals. The Subrecipient shall not enter into any subcontracts with any agency or individual in the performance of this contract without the written consent of the County prior to the execution of such agreement.

ii. Monitoring. The Subrecipient will monitor all subcontracted services on a regular basis to assure contract compliance. Results of monitoring efforts shall be summarized in written reports and supported with documented evidence of follow-up actions taken to correct areas of noncompliance.

iii. Content. The Subrecipient shall cause all of the provisions of this contract in its entirety to be included in and made a part of any subcontract executed in the performance of this Agreement.

iv. Selection Process. The Subrecipient shall undertake to insure that all subcontracts issued for the performance of this Agreement shall be awarded on a fair and open

competition basis in accordance with applicable procurement requirements. Executed copies of all subcontracts shall be forwarded to the County along with documentation concerning the selection process.

c. Hatch Act. The Subrecipient agrees that no funds provided, nor personnel employed under this Agreement, shall be in any way or to any extent engaged in the conduct of political activities in violation of 5 U.S.C. Chapter 15.

d. Conflict of Interest. The Subrecipient agrees to abide by the provisions of 2 CFR §200.112 and 570.611, which include (but are not limited to) the following:

   i. The Subrecipient shall maintain a written code or standards of conduct that shall govern the performance of its officers, employees, or agents engaged in the award and administration of contracts supported by Federal funds.

   ii. No employee, officer, or agent of the Subrecipient shall participate in the selection, or in the award, or administration of, a contract supported by Federal funds if a conflict of interest, real or apparent, would be involved.

   iii. No covered persons who exercise or have exercised any functions or responsibilities with respect to CDBG-assisted activities, or who are in a position to participate in a decision-making process or gain inside information with regard to such activities, may obtain a financial interest in any contract, or have a financial interest in any contract, subcontract, or agreement with respect to the CDBG-assisted activity, or with respect to the proceeds from the CDBG-assisted activity, either for themselves or those with whom they have business or immediate family ties, during their tenure or for a period of one (1) year thereafter. For purposes of this paragraph, a "covered person" includes any person who is an employee, agent, consultant, officer, or elected or appointed official of the County, the Subrecipient, or any designated public agency.

e. Anti-Lobbying. The Subrecipient hereby certifies that:

   i. No federal appropriated funds have been paid or will be paid, by or on behalf of it, to any person for influencing or attempting to influence an officer or employee of any agency, a member of Congress, an officer or employee of Congress, or an employee of a member of Congress in connection with the awarding of any Federal contract, the making of any Federal grant, the making of any Federal loan, the entering into any cooperative agreement and the extension, continuation, renewal, amendment, or modification of any federal contract, grant, loan, or cooperative agreement; and

   ii. If any funds other than Federal appropriated funds have been paid or will be paid to any person for influencing or attempting to influence an officer or employee of any agency, a member of Congress, an officer or employee of Congress, or an employee of a member of Congress in connection with this Federal contract, grant, loan, or

cooperative agreement, the Subrecipient will report this to the County and the Subrecipient shall complete and submit Standard Form-LLL, "Disclosure Form to Report Lobbying," in accordance with its instructions; and

iii. The Subrecipient will require the language of this Anti-Lobbying certification be included in the award documents for all subawards at all tiers (including subcontracts, subgrants, and contracts under grants, loans, and cooperative agreements) and that all subrecipients shall certify and disclose accordingly; and

iv. This certification is a material representation of fact upon which reliance was placed when this transaction was made or entered into. Submission of this certification is a prerequisite for making or entering into this transaction imposed by section 1352, title 31, U.S.C. Any person who fails to file the required certification shall be subject to a civil penalty of not less than $10,000 and not more than $100,000 for each such failure.

f. Copyright. If this Agreement results in any copyrightable material or inventions, the County and/or HUD reserves the right to royalty-free, non-exclusive and irrevocable license to reproduce, publish or otherwise use and to authorize others to use, the work or materials for governmental purposes.

g. Religious Activities. The Subrecipient agrees that funds provided under this Agreement will not be utilized for inherently religious activities such as worship, religious instruction, or proselytization.

24. Environmental Conditions.

a. Air and Water. The Subrecipient agrees to comply with the following requirements insofar as they apply to the performance of this Agreement:

i. Clean Air Act, 42 U.S.C. 7401 *et seq*. pursuant to 40 CFR Part 50, as amended.

ii. Federal Water Pollution Control Act commonly known as the Clean Water Act, as amended, 33 U.S.C. 1251 *et seq.*, as amended, 33 U.S.C. 1318 relating to inspection, monitoring, entry, reports, information, requirements, and all regulations and guidelines issued thereunder;

iii. Environmental Protection Agency (EPA) regulations.

b. Flood Disaster Protection. In accordance with the requirements of the Flood Disaster Protection Act of 1973 (42 U.S.C. 4001), the Subrecipient shall assure that for activities located in an area identified by the Federal Emergency Management Agency (FEMA) as having special flood hazards, flood insurance under the National Flood Insurance Program is obtained and maintained as a condition of financial assistance for acquisition or construction purposes (including rehabilitation).

c. Lead-Based Paint. The Subrecipient agrees that any construction or rehabilitation of residential structures with assistance provided under this Agreement shall be subject to HUD Lead-Based Paint Regulations at 24 CFR § 570.608, and 24 CFR Part 35, Subpart B. Such regulations pertain to all CDBG-assisted housing and require that all owners, prospective owners, and tenants of properties constructed prior to 1978 be properly notified that such properties may include lead-based paint. Such notification shall point out the hazards of lead-based paint and explain the symptoms, treatment and precautions that should be taken when dealing with lead-based paint poisoning and the advisability and availability of blood lead level screening for children under seven. The notice should also point out that if lead-based paint is found on the property, abatement measures may be undertaken. The regulations further require that, depending on the amount of Federal funds applied to a property, paint testing, risk assessment, treatment and/or abatement may be conducted.

d. Historic Preservation: The Subrecipient agrees to comply with the Historic Preservation requirements set forth in the National Historic Preservation Act of 1966, as amended and the procedures set forth in 36 CFR Part 800, Advisory Council on Historic Preservation Procedures for Protection of Historic Properties, insofar as they apply to the performance of this Agreement.

In general, this requires concurrence from the State Historic Preservation Officer for all rehabilitation and demolition of historic properties that are fifty years old or older or that are included on a Federal, state, or local historic property list.

25. General Terms.

a. Severability. If any term or provision of this Agreement shall, to any extent be invalid or unenforceable under applicable law, then the remaining terms and provisions of this Agreement shall not be affected thereby, and each of such remaining terms and provisions shall be valid and enforced to the extent permitted by law.

b. Exhibits. Each of the exhibits attached hereto is expressly incorporated herein and made a part of this Agreement, and all references to this Agreement shall include the exhibits hereto.

c. Amendments. The County or the Subrecipient may amend this Agreement at any time provided that such amendments make specific reference to this Agreement, and are executed in writing, signed by a duly authorized representative of each Party, and approved by the County's governing body. Such amendments shall not invalidate this Agreement, nor relieve or release the County or the Subrecipient from its obligations under this Agreement.

The County may, in its discretion, amend this Agreement to conform with Federal, state or local governmental guidelines, policies and available funding amounts, or for other reasons. If such amendments result in a change in the funding, the scope of services, or schedule of the activities to be undertaken as part of this Agreement, such modifications

will be incorporated only by written amendment signed by both the County and the Subrecipient.

d. Section Heading and Subheadings. The section headings and subheadings contained in this Agreement are included for convenience only and shall not limit or otherwise affect the terms of this Agreement.

e. Waiver. The County's failure to act with respect to a breach by the Subrecipient does not waive its right to act with respect to subsequent or similar breaches. The failure of the County to exercise or enforce any right or provision shall not constitute a waiver of such right or provision.

f. Governing Law. This Agreement shall be governed by and construed in accordance with the laws of the State of Arizona.

g. Mutual Indemnification. To the maximum extent permitted by law, each Party (as "**Indemnitor**") agrees to indemnify, defend and hold harmless the other Party, its governing body, officers, officials, agents, employees, and volunteers (as "**Indemnities**") from and against any and all claims, losses, liabilities, costs or expenses (including reasonable attorney's fees) (hereinafter collectively referred to as "Claims") arising out of actions taken in performance of this Agreement to the extent that such Claims are caused by the acts, omissions, negligence, misconduct, or other fault of the Indemnitor, its officers, governing body, officials, agents, employees, or volunteers.

h. Independent Contractor. Nothing contained in this Agreement is intended to, or shall be construed in any manner, as creating or establishing the relationship of employer/employee between the Parties. The Subrecipient shall at all times remain an "independent contractor" with respect to the services to be performed under this Agreement. The County shall be exempt from payment of all Unemployment Compensation, FICA, retirement, life and/or medical insurance and Workers' Compensation Insurance, as the Subrecipient is an independent contractor.

i. Entire Understanding. This Agreement contains the entire agreement between the Parties, and no statements, promises or inducements made by either Party, their agents, or employees that are not contained herein shall be valid or binding. This Agreement may not be altered except in writing and signed by both Parties hereto.

j. Conflict of Interest. The Parties acknowledge that this Agreement is subject to cancellation pursuant to A.R.S. § 38-511.

a. E-verify. The Subrecipient warrants that it is in compliance with A.R.S. § 41-4401 (e-verify requirements) and further acknowledges:

    i. Its compliance with all federal immigration laws and regulations that relate to its employees and its compliance with A.R.S. § 23-214;

ii. That a breach of this warranty shall be deemed a material breach of this Agreement and the County may immediately terminate this Agreement without liability.

iii. That the County retains the legal right to inspect the papers and employment records of any Subrecipient contractor or employee who works on the Project in any way or otherwise performs services in relation to this Agreement, to ensure that the Subrecipient is complying with the warranty provided above and that the Subrecipient agrees to make all papers and employment records of said contractor(s) and employee(s) available during normal working hours in order to facilitate such an inspection.

k. Israel Boycott Prohibited. The Subrecipient hereby certifies to the County as follows: that it is not currently engaged in, and agrees for the duration of this Agreement to not engage in, a boycott of Israel pursuant to A.R.S §35-393.01(A). Further that a breach of this Certification shall constitute a material breach of this Agreement that is subject to penalties up to and including termination of this Agreement, and that the County retains the legal right to inspect the records of the Subrecipient and its contractor(s) to ensure compliance with this certification.

l. Forced Labor of Ethnic Uyghurs Prohibited. Pursuant to A.R.S. § 35-394, the Subrecipient hereby certifies to the County as follows: that it is not currently using, and agrees for the duration of this Agreement to not use: (1) the forced labor of ethnic Uyghurs in the People's Republic of China; (2) any goods or services produced by the forced labor of ethnic Uyghurs in the People's Republic of China; and (3) any contractors, subcontractors, or suppliers that use the forced labor of ethnic Uyghurs in the People's Republic of China. The Subrecipient further acknowledges and agrees that: (1) if the Subrecipient becomes aware during the term of this Agreement that it is not in compliance with this certification that the Subrecipient will notify the County within five (5) business days after becoming aware of the noncompliance; and (2) if the Subrecipient does not provide the County with a written certification that the Subrecipient has remedied the noncompliance within one hundred eighty (180) days after giving notice thereof, the same shall constitute a material breach of this Agreement, which shall then terminate automatically, except that if this Agreement's termination date occurs before the end of the remedy period, this Agreement terminates on this Agreement's termination date. The County retains the legal right to inspect the records of the Subrecipient and its contractor(s) to ensure compliance with this certification for the duration of this Agreement.

26. Notices. All notices or other communication which shall or may be given pursuant to this Agreement shall be in writing and shall be effective upon hand delivery, deposit with a reputable overnight carrier such as FedEx for overnight delivery, or three (3) business days after deposit with the U.S. Mail via certified or registered mail, postage pre-paid, return receipt requested with a courtesy copy via e-mail as follows:

Pinal County Attn: Heather Patel Grants Manager	Town of Florence Attn: Jennifer Evans Management Analyst
Physical address: 31 North Pinal Street Florence, AZ 85132	775 N. Main Street Florence, AZ 85132
Mailing address: P.O. Box 1348 Florence, Arizona 85132	P.O. Box 2670 Florence, Arizona 85132
heather.patel@pinal.gov	Jennifer.evans@florenceaz.gov

The Parties shall have the right from time to time to change the place notice is to be given under this paragraph by written notice thereof to the other Party.

27. Fair Meaning. This Agreement is intended to express the mutual intent of the Parties and shall not be construed as if prepared by one of the Parties, but rather according to its fair meaning as a whole, as if both Parties had prepared it.

28. Waiver of Jury Trial. The Parties hereby waive their respective rights to trial by jury in any action or proceeding arising out of this Agreement.

29. Implied Contract Terms. Each provision of law and any terms required by law to be in this Agreement are a part of this Agreement as if fully stated herein.

30. Alternative Dispute Resolution. In the event of any dispute, the Parties will immediately attempt to resolve the dispute prior to taking formal action. Pursuant to A.R.S. § 12-1518, disputes under this Agreement shall be resolved through the use of arbitration when the case or lawsuit is subject to mandatory arbitration pursuant to rules adopted under A.R.S. § 12-133.

APPROVALS

IN WITNESS WHEREOF, the Parties hereto, have executed this Agreement as of the day and year set forth below.

Town of Florence, a municipal corporation of the State of Arizona

By: Tara Walter
Mayor

Dated: 2/20/24

ATTEST:

Town/City Clerk

Approved as to form and within the powers and authority granted the _____ _____ under the laws of the State of Arizona:

Town/City Attorney

PINAL COUNTY, a political subdivision of the State of Arizona

By: _____
Chair of the Board of Supervisors

Dated: _____

ATTEST:

_____
Clerk/Deputy Clerk of the Board of Supervisors

Approved as to form and within the powers and authority granted Pinal County under the laws of the State of Arizona:

_____
Deputy County Attorney

EXHIBIT "A"

CBDG AGREEMENT/COOPERATIVE AGREEMENT

U.S. HOUSING AND URBAN DEVELOPMENT
COMMUNITY PLANNING AND DEVELOPMENT PROGRAMS
COOPERATION AND COORDINATION AGREEMENT
BETWEEN PINAL COUNTY AND THE TOWN OF FLORENCE

THIS COOPERATION AND COORDINATION AGREEMENT ("Agreement") is dated the 7th day of July, 2021, and made by and between PINAL COUNTY, a political subdivision of the State of Arizona ("County") and the Town of Florence, an Arizona municipal corporation ("ULG"). The County and ULG are sometimes referred to herein individually as a "Party" and collectively as the "Parties".

RECITALS

A. Pursuant to Title I of the Housing and Community Development Act of 1974, as amended ("Act") and applicable regulations of the United States Department of Housing and Urban Development ("HUD"), as amended ("Regulations"), the County is a qualified urban county entitled to receive Community Development Block Grant ("CDBG"), HOME Investment Partnership ("HOME"), and Emergency Solutions Grant ("ESG") funding through HUD.

B. The ULG is a unit of general local government under the Act and Regulations, and has elected to participate with the County in the Urban County funding program administered by the County ("Program").

C. The County and ULG are entering into this Agreement to define their rights and responsibilities under the Program pursuant to the requirements of the Act and Regulations.

AGREEMENT

IN CONSIDERATION of the mutual covenants contained in this Agreement and consistent with the requirements of the Act and Regulations, the Parties agree as follows:

1. This Agreement covers the CDBG, HOME and ESG programs.

2. By executing this Agreement, the ULG understands that it:

   A. May not apply for grants from appropriations under the State of Arizona CDBG Program during the period in which it participates in the County's CDBG Program; and

   B. May receive a formula allocation under the HOME Program only through the urban county. Thus, even if the urban county does not receive a HOME formula allocation, the participating unit of local government cannot form a HOME consortium with other local governments. Additionally, the ULG may apply to the State for HOME funds, if the State allows; and

C. May receive a formula allocation under the ESG Program only through the urban county. However, this does not preclude the ULG from applying to the State for ESG funds, if the State allows.

3. This agreement covers the years of the County's qualification period including Federal FYs 2022, 2023, and 2024. This Agreement will automatically be renewed for participation in successive three-year qualification periods, unless the County or ULG provides written notice to the other Party it elects not to participate in a new qualification period. A copy of the notice shall be sent to the applicable HUD Field Office.

4. The County will notify the ULG in writing of its right to discontinue participation in a new qualification period no later than the date specified in the County's HUD qualification notice. A copy of the County's notification to the ULG shall be sent to the applicable HUD Field Office by the date specified in Section II of the County's Qualification Schedule.

5. Each Party agrees to adopt in writing any amendment to this Agreement incorporating changes necessary to meet future requirements for cooperation agreements set forth by HUD in the County's qualification notice for a subsequent three-year County qualification period. Future amendments shall be submitted to HUD and a failure to comply will void the automatic renewal for the qualification period.

6. This Agreement shall remain in effect until the CDBG, HOME and ESG funds and program income received for activities carried out during the term of the County's three-year qualification period, and any successive qualification periods under this Agreement, are expended and the funded activities completed. The County and ULG will not terminate or withdraw from this Agreement prior to completion of funded activities.

7. The County and ULG agree to cooperate to undertake, or assist in undertaking, community renewal and lower-income housing assistance activities.

8. The County and ULG agree to take all actions necessary to assure compliance with the County's certification under section 104(b). The Program will be conducted and administered in conformity with the Civil Rights Act of 1964 and the Fair Housing Act, and will strive to affirmatively further the goal of fair housing. The County and ULG agree to comply with section 109 of Title I of the Housing and Community Development Act of 1974, which incorporates Section 504 of the Rehabilitation Act of 1973, the Age Discrimination Act of 1975 and all other applicable laws. The County is expressly prohibited from funding any activities in, or in support of, any cooperating unit of general local government including the ULG that does not affirmatively further fair housing within its own jurisdiction or that impedes the County's actions to comply with fair housing certification.

9. As a HUD requirement for participation in the Program, the ULG agrees to:

A. Prohibit the use of excessive force by law enforcement agencies within its jurisdiction against individuals engaged in non-violent civil rights demonstrations; and

B. Enforce applicable State and local laws against physically barring entrance to or exit from a facility or location which is the subject of a non-violent civil rights demonstration.

10. Neither Party may veto or otherwise obstruct the implementation of the approved Consolidated Plan during the period covered by this Agreement. The County has final responsibility for submitting the Consolidated Plan to HUD that includes CDBG, HOME and ESG activities.

11. Pursuant to 24 CFR 570.501(b), the ULG is subject to the same requirements applicable to subrecipients, including the requirement of a written agreement as described in 24 CFR 570.503.

12. The ULG must use CDBG, HOME, and ESG funds for activities eligible under the Act and Regulations and may not sell, trade, or otherwise transfer any portion to another metropolitan city, urban county, unit of general local government, Indian tribe, or insular area that directly or indirectly receives CDBG funds, in exchange for any other funds, credits or non-Federal considerations.

IN WITNESS WHEREOF, these presents are hereby signed and agreed to by the Parties hereto.

Town of Florence, an Arizona municipal Corporation

By: Tara Walters
Mayor

Date: June 22, 2021

ATTEST:

By: _____
City/Town Clerk

PINAL COUNTY, a political subdivision of the State of Arizona

By: _____
Chairman of the Board

Date: 07/07/2021

ATTEST:

By: _____
Clerk/Deputy Clerk of the Board

COUNSEL LEGAL OPINION

I have read this Agreement and have determined the terms and provisions of this Agreement are fully authorized under State and local law and this Agreement provides full legal authority for the County.

Deputy County Attorney

7-15-21
Date

I have read this Agreement and have determined the terms and provisions of this Agreement are fully authorized under State and local law and this Agreement provides full legal authority for the unit of local government ("ULG").

City/Town Attorney

June 22, 2021
Date

EXHIBIT "B"

THE PROJECT

I. SUBRECIPIENT INFORMATION

Organization Name	Town of Florence
Address	P.O. Box 2670
City, State, Zip Code	Florence, Arizona 85132
Telephone	520-868-7549
Contact Person	Jennifer Evans
E-mail address	Jennifer.evans@florenceaz.gov
DUNS#	144375743
Tax Identification #	86-6000245
UEI	KJDYVTSJJ3J4

II. PROGRAM INFORMATION

CFDA #	14.218
Funding Year	Federal Fiscal Year 2022/Program Year 2022
HUD Grant #	B-23-UC-04-0503
Date of HUD Agreement	September 6, 2023
HUD Agreement Amount	$1,884,846.00
Amount to the Subrecipient	$197,063
Period of Performance	Agreement execution – March 30, 2025
Budget Period	Agreement execution – April 30, 2025

III. PROJECT INFORMATION

Project Name	Florence Senior Center ADA Improvements Heritage Park ADA Improvements
Project Number	2023-4
National Objective	Low and Moderate Income Limited Clientele - XX Elimination of Slum or Blight

IV. KEY PERFORMANCE INDICATORS

Project Description	The Town of Florence will competitively procure a contractor to design and construct ADA improvements to the Florence Senior Center and Heritage Park. Both sites are owned by the Town of Florence. The service area is the geographic boundaries of Florence because all residents may use these facilities. ADA improvements will be made to the north and east

	side parking lots at the Senior Center. This includes the replacement of ramps and curb ramps, re-striping ADA parking spaces, and replacement of ADA parking signage. The improvements at Heritage Park include the installation of approx. 50 l.f. of ADA-compliant sidewalks, complete ADA-compliant restroom improvements and install poured-in-place rubber ground cover around the playground equipment.
Project Location	Florence Senior Center located at 330 North Pinal Street and Heritage Park located at 600 North Main Street.
Project Beneficiaries	16,950
Percentage of LMI	50%

Ethnicity and Race of beneficiaries

White	12119
Black or African American	1627
Asian	85
American Indian and Alaskan Native	542
Native Hawaiian or other Pacific Islander	102
Some other race (s)	2475
Hispanic or Latino	6305

V. PROJECT SCHEDULE

Application Received	February 2023
Acceptance of project scope	February 10, 2023
Environmental Review	October 20, 2023
Execute Subrecipient Agreement	February/March 2024
Release of Funds from Pinal County	Upon execution
Completed procurement	June 30, 2024
Project completion	March 30, 2025
Davis Bacon and Section 3 compliance, if applicable	March 30, 2025
Project closeout, all funds expended, and closeout report due	April 30, 2025

EXHIBIT "C"

QUARTERLY REPORTS

VI. REPORTING

Quarterly Reports	July 1 – September 30 submitted by October 10 October 1 – December 31 by January 10 January 1 – March 30 by April 10 April 1 – June 30 by July 10
Closeout report	Within 30 days of end of project

The following data points shall be included in each quarterly progress report when applicable:

1. Description and rational of change orders including documentation.
2. Wage decision received through SAM.gov
3. Labor standard and payroll reports as provided at https://www.hud.gov/program_offices/davis_bacon_and_labor_standards/olrform with corresponding Section 3 documentation
4. Status of project by percent complete compared to the funds expended and the schedule submitted with the application
5. Any additional funds allocated and spent on the project including the source
6. FFATA required data for all contracts.
    a. Name and address of contractor
    b. Copy of the executed contract
    a. Total contract amount
    b. verification of www.sam.gov eligibility
    c. UEI #/Unique Entity ID
    d. MBE/WBE eligibility
    e. List of subcontractors including the above information in a-d
    f. Project description
    g. Location of performance

A final report/closeout report shall be submitted within 30 days of close of project. The following items shall be included in the report:

1. Total number of beneficiaries and number of low income beneficiaries if different from the application.
2. Breakdown of beneficiaries by race and ethnicity including: White, Black or African American, American Indian and Alaskan Native, Asian, Native Hawaiian or other Pacific Islander, Some other Race, or Two or more Races. Also, each beneficiary should be identified if they are Hispanic or Latino if different from application.
3. Total amount of additional funds spent on the project, including source.
4. Final outcome of project e.g. l.f. of sidewalks, number of ADA ramps, etc.
5. Actions taken on behalf of the Subrecipient to remove negative effects of public policy that serve as a barrier to affordable housing. This information can typically be obtained through

the planning department. Examples might be as follows: do you restrict multifamily development to one part of town where the low-income residents live? Do you provide for development agreements to give incentives to residential developments to incorporate affordable housing units?

6. What actions, if any, were taken to reduce lead-based paint hazards in affordable housing?
7. What actions, if any, were taken to reduce the number of poverty-level families within your community? What are the social service-type activities you do or provide to benefit this population? What economic development activities do you engage in to bring jobs to your residents?
8. What actions, if any, were taken to improve coordination with social service agencies serving your community? Are there community meetings or events that bring agencies together to serve your residents?
9. Documentation of Affirmatively Furthering Fair Housing. What actions, if any, were taken to remove impediments to fair housing outside those actions listed above?

EXHIBIT "D"

CERTIFICATIONS

In accordance with the applicable statues and the regulations governing the consolidated plan regulations, the unit of local of government (ULG) certifies with each application that:

Affirmatively Further Fair Housing –ULG will affirmatively further fair housing.

Uniform Relocation Act and Anti-displacement and Relocation Plan –ULG will comply with the acquisition and relocation requirements of the Uniform Relocation Assistance and Real Property Acquisitions Policies Act of 1970, as amended (42 U.S.C. 4601-4655) and implementing regulations at 49 CFR Part 24. ULG has in effect and is following a residential anti-displacement and relocation assistance plan required under 24 CFR Part 42 in connection with any activity assisted with funding under the Community Development Block Grant (CDBG) or HOME programs.

Anti-Lobbying – To the best of the ULG's knowledge and belief:

1. No federal appropriated funds have been paid or will be paid, by or on behalf of it, to any person for influencing or attempting to influence an officer or employee of any agency, a member of Congress, an officer or employee of Congress, or an employee of a member of congress in connection with the awarding of any Federal contract, the making of any Federal grant, the making of any Federal loan, the entering into any cooperative agreement and the extension, continuation, renewal, amendment, or modification of any federal contract, grant, loan, or cooperative agreement; and

2. If any funds other than Federal appropriated funds have been paid or will be paid to any person for influencing or attempting to influence an officer or employee of any agency, a member of Congress, an officer or employee of Congress, or an employee of a member of Congress in connection with this Federal contract, grant, loan, or cooperative agreement, the ULG shall certify and disclose this to Pinal County so the ULG will report this to Pinal County and the ULG shall complete and submit Standard Form-LLL, "Disclosure Form to Report Lobbying," in accordance with its instructions; and

3. This Anti-Lobbying certification will be included in the award documents for all subawards at all tiers (including subcontracts, subgrants, and contracts under grants, loans, and cooperative agreements) and all subrecipients shall certify and disclose accordingly; and

4. This certification is a material representation of fact upon which reliance was placed when this transaction was made or entered into. Submission of this certification is a prerequisite for making or entering into this transaction imposed by section 1352, title 31, U.S.C. Any person who fails to file the required certification shall be subject to a civil penalty of not less than $10,000 and not more than $100,000 for each such failure.

Authority of Jurisdiction – The consolidated plan is authorized under State and local law and the ULG possesses the legal authority to carry out the programs for which it is seeking funding, in accordance with applicable HUD regulations.

Consistency with Plan – The activities to be undertaken with Community Development Block Grant (CDBG), HOME, Emergency Solutions Grant, and housing opportunities for persons with AIDS funds are consistent with the strategic plan in Pinal County's consolidated plan.

Section 3 –ULG will comply with section 3 of the Housing and Urban Development Act of 1968 (12 U.S.C. § 1701u) and implementing regulations at 24 CFR Parts 75 and 135.

Citizen Participation – ULG is in full compliance and adhering to Pinal County's detailed citizen participation plan that satisfies the requirements of 24 CFR § 91.105.

Community Development Plan – Pinal County's consolidated plan identifies community development and housing needs and specific both short-term and long-term community development objectives that have been developed in accordance with primary objective of the CDBG program (i.e., the development of viable urban communities, by providing decent housing expanding economic opportunities, primarily, for persons of low and moderate income) and requirements of 24 CFR Parts 91 and 570. The ULG further certifies it is following a current consolidated plan that has been approved by HUD.

Use of funds – ULG has complied with the following criteria:

1. Maximum Feasible Priority. With respect to activities expected to be assisted with CDBG funds, ULG has developed a proposal to be included in the Pinal County Action Plan so as to give maximum feasible priority to activities which benefit low-moderate income families or aid in the prevention of elimination of slums or blight. The Action Plan may also include CDBG-assisted activities which the County certifies are designed to meet other community development needs having particular urgency because existing conditions pose a serious and immediate threat to the heath or welfare of the community, and other financial resources are not available.

2. Overall Benefit. The aggregate use of CDBG funds, including section 108 guaranteed loans, during program year(s) *2022,2023,2024*, shall principally benefit persons of low and moderate income in a manner that ensures at least 70 percent of the amount is expended for activities that benefit such persons during the designated period.

3. Special Assessments. ULG will not attempt to recover any capital costs of public improvements assisted with CDBG funds, including section 108 loan guaranteed funds, by assessing any amount against properties owned and occupied by persons of low and moderate income, including any fee charged or assessment made as a condition of obtaining access to such public improvements.

However, if CDBG funds are used to pay the portion of a fee or assessment that related to the capital costs of public improvements (assisted in part with CDBG funds) financed from other

revenue sources, an assessment of charge may be made against the property with respect to the public improvements financed by a source other than CDBG funds.

In addition, in the case of properties owned and occupied by moderate-income (not low-income) families, an assessment or charge may be made against the property for public improvements financed by a source other than CDBG funds if the jurisdiction certifies that it lacks CDBG funds to cover the assessment.

Excessive Force – ULG has adopted and is enforcing:

1. A policy prohibiting the use of excessive force by law enforcement agencies within its jurisdiction against any individuals engaged in non-violent civil rights demonstrations; and

2. A policy of enforcing applicable state and local laws against physically barring entrance to or exit from a facility or location which is the subject of such non-violent civil rights demonstrations within its jurisdiction.

Compliance with Anti-discrimination laws – The program will be conducted and administered in conformity with Title VI of the Civil Rights Act of 1964 (42 U.S.C. 2000d) and the Fair Housing Act (42 U.S.C. 3601-3619) and their implementing regulations.

Lead-Based Paint –ULG's activities concerning lead-based paint will comply with the requirements of 24 CFR Part 35, Subparts A, B, J, K and R.

Compliance with Laws –ULG will comply with applicable laws.

Specific HOME Certifications - The HOME participating jurisdiction certifies that:

- **Tenant Based Rental Assistance** – If ULG plans to provide tenant-based rental assistance, the tenant-based rental assistance is an essential element of its consolidated plan.

- **Eligible Activities and Costs** –ULG is using and will use HOME funds for eligible activities and costs, as described in 24 CFR §§ 92.205 through 92.209 and that ULG is not using and will not use HOME funds for prohibited activities, as described in 24 CFR §92.214.

- **Subsidy Layering** – Before committing any funds to a project, ULG will evaluate the project in accordance with the guidelines that is adopts for this purpose and will not invest any additional HOME funds in combination with other federal assistance than is necessary to provide affordable housing.

Lobbying or Anti-Lobbying Certifications
This certification is a material representation of fact upon which reliance was placed when this transaction was made or entered into. Submission of this certification is a prerequisite for making or entering into this transaction imposed by section 1352, title 31, U.S. Code. Any person who

fails to file the required certification shall be subject to a civil penalty of not less than $10,000 for each such failure.

Conflict of Interest - ULG has no conflict of interest with the Pinal County appointed or elected representatives under the provisions of *ARS* Title 38, Chapter 3, Article 8 regarding conflict of interest and exceptions thereto.

Federal Labor Standards - ULG will comply with federal requirements to be observed by organizations being funded with CDBG/HUD funds, including compliance with Federal Labor Standards, Section 3, Segregated Facilities, Equal Opportunity, and Non- Discrimination; Section 109, Title VI and EO 11246. All requirements are also described in 24 CFR Part 570 (including Subpart D, CDBG Entitlement Grants).

EXHIBIT "E"

CERTIFICATION FOR A DRUG-FREE WORKPLACE

The Subrecipient certifies that it will or will continue to provide a drug-free workplace by:

a. Publishing a statement notifying employees that the unlawful manufacture, distribution, dispensation, possession, or use of a controlled substance is prohibited in the workplace and specifying the actions that will be taken against employees for violation of the prohibition.

b. Establishing an ongoing drug-free awareness program to inform employees about:

    1. The dangers of drug abuse in the workplace;

    2. The Subrecipient's policy of maintaining a drug-free workplace;

    3. Available drug counseling, rehabilitation, and employee assistance programs; and

    4. The penalties that may be imposed upon employees for drug abuse violations.

c. Making it a requirement that each employee to be engaged in the performance of activities or services set forth in this Agreement or otherwise in performance of the grant be given a copy of the statement required by paragraph (a).

d. Notifying the employee in the statement required by paragraph (a) that, as a condition of employment in the performance of activities or services set forth in this Agreement, or otherwise under the grant, the employee will:

    1. Abide by the terms of the statement; and

    2. Notify the Subrecipient of any criminal drug statute violation occurring in the workplace no later than five (5) days after such conviction.

e. Notifying the County within ten (10) days after receiving notice of such employee's conviction pursuant to paragraph (d)(2) or otherwise receiving actual notice of the conviction. The Subrecipient must provide notice, including position title, to the County. Notice shall include reference to this Agreement to allow the County to determine how it might affect the grant.

f. Taking one of the following actions, within 30 calendar days of receiving notice with respect to any employee who is so convicted:

1. Taking appropriate personnel action against such an employee, up to and including termination, consistent with the requirements of the Rehabilitation Act of 1973, as amended; or

2. Requiring such employee to satisfactorily participate in a drug abuse assistance or rehabilitation program approved for such purposes by a federal, state, or local health, law enforcement, or other appropriate agency.

g. Making a good faith effort to continue to maintain a drug-free workplace through implementation of the paragraphs set forth herein.

h. Requiring that the language of this certification be included in the award documents for all subawards at all tiers (including subcontracts, subgrants, and contracts under grants, loans, and cooperative contracts) and that all subcontractors shall certify and disclose accordingly.

PINAL COUNTY
WIDE OPEN OPPORTUNITY

AGENDA ITEM

March 6, 2024 ADMINISTRATION BUILDING A
FLORENCE, ARIZONA

REQUESTED BY:

Funds #:

Dept. #:

Dept. Name: Economic and Workforce Development Department

Director: James Smith

BRIEF DESCRIPTION OF AGENDA ITEM AND REQUESTED BOARD ACTION:

Discussion/approval/disapproval to accept an Award issued per ALERT PY21/FY22-5A "One-Time Funding Opportunity" between the Arizona Department of Economic Security and Pinal County, through the Pinal County Board of Supervisors, beginning February 12, 2024, and ending May 31, 2024, in the amount of $516,802. This grant will be used by the ARIZONA@WORK Pinal County Adult and Dislocated Worker programs to serve 50 Adult Probationers from February 2024, through May 2024, to address the unique barriers faced by individuals re-entering the workforce after a felony conviction. Acceptance requires an amendment to the FY23/24 budget to transfer reserve appropriation from Fund 213 (Grants/Project Contingency) to Fund 298 (ED-Workforce Innovation-WIOA) to increase revenues and expenditures. (Joel Millman/James Smith)

BRIEF DESCRIPTION OF THE FISCAL CONSIDERATIONS AND/OR EXPECTED FISCAL IMPACT OF THIS AGENDA ITEM:

There is no impact on the General Fund.

BRIEF DESCRIPTION OF THE EXPECTED PERFORMANCE IMPACT OF THIS AGENDA ITEM:

MOTION:

Approve as presented

History

Time	Who	Approval
2/27/2024 4:41 PM	County Attorney	Yes
2/28/2024 7:58 AM	Grants/Hearings	Yes
2/28/2024 11:07 AM	Budget Office	Yes
2/28/2024 12:10 PM	County Manager	Yes
2/28/2024 12:28 PM	Clerk of the Board	Yes

ATTACHMENTS:

Click to download
Alert-24-002 One Time Funding Award
Grant Request form

DEPARTMENT OF ECONOMIC SECURITY
Your Partner For A Stronger Arizona

Katie Hobbs
Governor

Vacant
Director

February 12, 2024

To: Local Workforce Development Areas (LWDAs)

From: Lynn Larson
DES Deputy Assistant Director
Division of Employment and Rehabilitation Services (DERS)

Subject: PY21/FY22 - Funding Opportunities Allocations

The following ALERTS are attached:

ALERT	**FUND SOURCE/TYPE**
ALERT PY21/FY22-5A	One-Time Funding Opportunity Awards

The ALERTS are subject to change as additional information is received by DERS pertaining to the funding sources identified.

ALERTS are available on the Division website using the link:
https://des.az.gov/WIOATitle1FundsAllocation

For any questions regarding this ALERT, please contact wioaprogram@azdes.gov

CC: Anna Hunter, Tom Colombo, David Almaraz, Rachael Leisen, Aaron Johnson, Sara Agostinho, Jennifer Kelley, Matthew Smith, Jordan Dodeward, Regina Weiler, Ali Gamero-Hernandez, Shawn Hyde, Nancy Meeden

1789 W. Jefferson, Mail Drop 5111, Phoenix, AZ 85007 • P.O. Box 6123, Mail Drop 5111, Phoenix, AZ 85005
Telephone (602) 542-4910 • https://des.az.gov/

Approximately $10M is available to Local Workforce Development Areas to support various employment and training programs as allowable under 20 CFR § 682.200 and 20 CFR § 682.210, Proposals were received from City of Phoenix, Coconino, Northeastern Arizona, Pima, Pinal, and Yuma. Proposals were evaluated for allowability as identified in 20 CFR § 682.110 and 20 CFR § 683.110. Awards are also based on the planned completion dates and the ability to expedite fund expenditure.

This one-time funding must be obligated by May 31, 2024, and liquidated by July 15, 2024 or the funding is reverted back to the Department of Economic Security. The following requirements apply to the awards:

- Obligations must be reported on the reimbursement reports. Any funds not obligated by May 31, 2024, must be returned to the Department of Economic Security.
- The final request for reimbursement must be submitted no later than July 15, 2024.
    - LWDAs with awards in this ALERT will submit reimbursement requests using the provided invoice template. Submit reimbursement requests as frequently as possible to WIOAfiscalreports@azdes.gov. ADES will follow up with LWDAs, as necessary, to obtain final figures byJune 3, 2024.
- All expenditures must be allowable under the cost principles and are not exempt from WIOA guidelines. Example, Payments and services to individuals must be WIOA enrolled participants.
- Out of School Youth cumulative expenditures within this allocation must be reported for all direct youth services within these approvals.
- Any approved allocations for equipment require pre-approval by ADES. ADES will send a template for signature to each LWDA within the next few weeks. If you are granted funding for equipment but have not received approval by March 1, 2024 please reach out to aaronjohnson@azdes.gov
- Backup documentation and items of cost will be subject to review in future fiscal and program monitors.
- Upon completion of the work, submit a narrative/presentation to share the results of the population benefiting from the effort, to learn from local community experience, and to showcase partnership successes. Please submit narrative/presentation to wioaprogram@azdes.gov no later than July 31, 2024.

Awards are made for the following projects for overall statewide total of $5,938,213:

LWDA	Project Proposed	Project Amount	Total Awarded
City of Phoenix	Job search workshops - virtual serving maximum of 500 people; in-person serving maximum 200 people; MeVirtual workshops serving maximum 500 people	$30,000	$100,000
	Customized employer hiring expos - virtual expos with up to 20 employers; events with 15-50 employers hosted/job seekers network with hiring companies	$30,000	
	Full marketing outreach campaign for each expo - weekly direct emails and social media posts	$40,000	

LWDA	Project Proposed	Project Amount	Total Awarded
Coconino	Participant referral system - increased participant placement rates by 10% within the first year; reduced service redundancy by 10% through improved program coordination; enhanced partner collaboration and knowledge sharing; improved data collection and analysis for informed decision-making	$300,000	$1,186,297
	Tynkertopia ignites creativity and critical thinking through hands-on workshops and mentorship, building a future workforce brimming with tech-savvy trailblazers - increase in youth participation in training programs	$400,000	
	Katalyst Space Technologies 12-week internship program introducing college students to the dynamic and growing space technology sector - 4 internships	$68,160	
	Northern Arizona Regional Forestry Academy - 8 week odyssey for out-of-school youth (18-24 years old) - increase in youth participation	$218,137	
	Marketing and rebranding - Anticipate reaching a broader audience of potential job seekers and employers, leading to increased job placements and reduced unemployment rates, growth in business retention and expansion, and enhanced economic development and competitiveness for the Coconino County region	$200,000	
Pima	Pre-Apprenticeship (Building Trades) - 30 successfully completing students (ages 17+) enter trades apprenticeship	$234,516	$2,973,834
	Afterschool and Year-Round Internship Opportunities - at least 75 students complete 160 hours of work experience	$481,795	
	In School Youth - Credit Recovery Stipends - 75 students with barriers (English language learners, refugee, basic skills deficient, low income) complete 180 hours of in classroom time	$135,000	
	Community Resource Navigators (Bringing One-Stop Closer to Home) - increase overall recruitment and enrollment in WIOA activities (basic career services); increase equitable service delivery to WIOA target populations in rural and underserved areas	$372,523	
	Support Services (Wrap Around Services) - all WIOA Adult enrolled in individual career services and eligible to receive supportive services	$1,750,000	
Pinal	“Intentional Design of Justice Involved Career Pathways” Initiative - 45 participants provided employment and offered a pathway to new beginnings and a brighter future	$516,802	$516,802

LWDA	Project Proposed	Project Amount	Total Awarded
NEAZ	Occupational Skills Training/Support Services for program participants - occupational training leading to credentials for additional 25 participants	$162,500	$393,082
	Supporting Provision of Career Services in Job Centers (resource room computer upgrade) - improved resource access for hundreds or thousands of job center visitors over lifespan of equipment	$5,700	
	Atlas referral network - implementation of technology initiative in 5 regional job centers and 7 Apache County libraries.	$68,584	
	Equip Job Center staff to participate in job fairs (Job Fair Kits) - creation of 10 Job Fair Kits to facilitate job fairs throughout region	$43,098	
	Technical Assistance Support (Training library) - training of 25 program and administrative staff	$13,200	
	Technical Assistance Support (WIOA consulting) - improved local policy, procedure, and plan development culminating in updated Local Plan	$50,000	
	Outreach (Media and web service) - Increased program enrollment and brand awareness	$50,000	
Yuma	Occupational Skills Training (OST) assistance and Internships/Work Experience (WEX) 15 youths, 5 dislocated workers, and 4 adults successfully will be completing occupational skills training / 22 youths, 3 dislocated workers, 17 adults will be successfully completing Work Experience/Internship / 102 youths, 17 dislocated workers, and 76 adults will be participating in training, individualized or career services with the provision of supportive services / 94 youths will be participating in educational or training services with the provision of supportive services / 105 youths will be provided with incentives payments for successfully completing training and/or completing activities from the 14 program elements.	$533,798	$768,198
	Supplement on-site security guards - enhanced security for One-Stop Center	$29,000	
	Economic Analysis and Study - assist and customize the four-year plan for Yuma County	$121,000	
	ADA Equipment, Van, and Trailer - programmatic access compliance and support career fairs, customized recruitment, and rapid response activities	$84,400	

Please send your questions to wioaprogram@azdes.gov.

PY21FY22

	PY YT	PY AD	PY DW	FY AD	FY DW	One-Time Funding (Allowable Statewide Activities)
Begin Date	7/1/2023	7/1/2023	7/1/2023	7/1/2023	7/1/2023	7/1/2023
End Date	6/30/2024	6/30/2024	6/30/2024	6/30/2024	6/30/2024	5/31/2024
Final Report Due	8/15/2024	8/15/2024	8/15/2024	8/15/2024	8/15/2024	7/15/2024

NEAZ		PY YT	PY AD	PY DW	FY AD	FY DW	One-Time Funding	Total
	Admin	$0	$0	$0	$0	$0	$0	$0
	Prog	$0	$0	$0	$0	$0	$393,082	$393,082
	Total	$0	$0	$0	$0	$0	$393,082	$393,082

Cochise		PY YT	PY AD	PY DW	FY AD	FY DW	One-Time Funding	Total
	Admin	$5,172	$0	$0	$5,041	$8,430	$0	$18,643
	Prog	$46,546	$0	$0	$45,370	$75,870	$0	$167,786
	Total	$51,718	$0	$0	$50,411	$84,300	$0	$186,429

Coconino		PY YT	PY AD	PY DW	FY AD	FY DW	One-Time Funding	Total
	Admin	$0	$0	$0	$0	$0	$0	$0
	Prog	$0	$0	$0	$0	$0	$1,186,297	$1,186,297
	Total	$0	$0	$0	$0	$0	$1,186,297	$1,186,297

Maricopa		PY YT	PY AD	PY DW	FY AD	FY DW	One-Time Funding	Total
	Admin	$51,820	$0	$0	$48,383	$61,952	$0	$162,155
	Prog	$466,383	$0	$0	$435,451	$557,572	$0	$1,459,406
	Total	$518,203	$0	$0	$483,834	$619,524	$0	$1,621,561

Mohave		PY YT	PY AD	PY DW	FY AD	FY DW	One-Time Funding	Total
	Admin	$0	$0	$0	$0	$0	$0	$0
	Prog	$0	$0	$0	$0	$0	$0	$0
	Total	$0	$0	$0	$0	$0	$0	$0

Phoenix		PY YT	PY AD	PY DW	FY AD	FY DW	One-Time Funding	Total
	Admin	$42,854	$0	$0	$40,478	$39,775	$0	$123,107
	Prog	$385,686	$0	$0	$364,310	$357,973	$100,000	$1,207,969
	Total	$428,540	$0	$0	$404,788	$397,748	$100,000	$1,331,076

Pima		PY YT	PY AD	PY DW	FY AD	FY DW	One-Time Funding	Total
	Admin	$29,249	$0	$0	$27,353	$29,886	$0	$86,488
	Prog	$263,237	$0	$0	$246,173	$268,972	$2,973,834	$3,752,216
	Total	$292,486	$0	$0	$273,526	$298,858	$2,973,834	$3,838,704

Pinal		PY YT	PY AD	PY DW	FY AD	FY DW	One-Time Funding	Total
	Admin	$0	$0	$0	$0	$0	$0	$0
	Prog	$0	$0	$0	$0	$0	$516,802	$516,802
	Total	$0	$0	$0	$0	$0	$516,802	$516,802

Santa Cruz		PY YT	PY AD	PY DW	FY AD	FY DW	One-Time Funding	Total
	Admin	$0	$0	$0	$0	$0	$0	$0
	Prog	$0	$0	$0	$0	$0	$0	$0
	Total	$0	$0	$0	$0	$0	$0	$0

Tribal		PY YT	PY AD	PY DW	FY AD	FY DW	One-Time Funding	Total
	Admin	$0	$0	$0	$0	$0	$0	$0
	Prog	$0	$0	$0	$0	$0	$0	$0
	Total	$0	$0	$0	$0	$0	$0	$0

Yavapai		PY YT	PY AD	PY DW	FY AD	FY DW	One-Time Funding	Total
	Admin	$0	$0	$0	$0	$0	$0	$0
	Prog	$0	$0	$0	$0	$0	$0	$0
	Total	$0	$0	$0	$0	$0	$0	$0

Yuma		PY YT	PY AD	PY DW	FY AD	FY DW	One-Time Funding	Total
	Admin	$45,864	$0	$0	$42,872	$20,870	$0	$109,606
	Prog	$412,778	$0	$0	$385,848	$187,832	$768,198	$1,754,656
	Total	$458,642	$0	$0	$428,720	$208,702	$768,198	$1,864,262

Alert 24-002 Invoice

One-Time Funding Expenditures	
LWDB:	
General Description:	
Begin Date : 07/01/2023	
Expenditures Reported Through (Date):	
Expense Categories	
(Complete as appropriate, Current Entries are Examples Only)	
Total Participant Support Service Cost	$ -
Total LWDB Staffing/Travel Cost	$ -
Additional Cost (if applicable)	$ -
	$ -
	$ -
	$ -
	$ -
	$ -
	$ -
Total LWDB Reimbursement Requests	**$ -**

For Direct Youth Services ONLY:	Total Spent of Allocation on Direct Youth Services	$ -
	Total Spent of Allocation on Out-of-School Youth	$ -

PINAL COUNTY
WIDE OPEN OPPORTUNITY

Board of Supervisors Grant Request

Board of Supervisors meeting date: _____

Department seeking grant: _____

Name of Granting Agency: _____

Name of Grant Program: _____

Project Name: _____

Amount requested: _____

Match amount, if applicable: _____

Application due date: _____

Anticipated award date/fiscal year: _____

What strategic priority/goal does this project address?: _____

Applicable Supervisor District: _____

Brief description of project:

Approval received per Policy 8.20: _____ OnBase Grant #: _____

Please select one:

Discussion/Approve/Disapproval consent item _____

New item requiring discussion/action _____

Public Hearing required _____

Please select all that apply:

Request to submit the application _____

Retroactive approval to submit _____

Resolution required _____

Request to accept the award _____

Request to approve/sign an agreement _____

Budget Amendment required _____

Program/Project update and information _____

PINAL COUNTY
WIDE OPEN OPPORTUNITY

AGENDA ITEM

March 6, 2024 ADMINISTRATION BUILDING A
FLORENCE, ARIZONA

REQUESTED BY:

Funds #:

Dept. #:

Dept. Name: Economic and Workforce Development

Director: James Smith

BRIEF DESCRIPTION OF AGENDA ITEM AND REQUESTED BOARD ACTION:

Discussion/approval/disapproval of the appointment of Mike Cruz of Lucid Motors (Business Sector) to the Pinal County Workforce Development Board. The term of service will be March 7, 2024, to March 6, 2026. (Joel Millman/James Smith)

BRIEF DESCRIPTION OF THE FISCAL CONSIDERATIONS AND/OR EXPECTED FISCAL IMPACT OF THIS AGENDA ITEM:

BRIEF DESCRIPTION OF THE EXPECTED PERFORMANCE IMPACT OF THIS AGENDA ITEM:

MOTION:

Approve as Presented

History

Time	Who	Approval
2/26/2024 8:13 AM	County Attorney	Yes
2/27/2024 7:42 AM	Budget Office	Yes
2/28/2024 3:29 PM	County Manager	Yes
2/28/2024 3:53 PM	Clerk of the Board	Yes

ATTACHMENTS:

Click to download

- Recommendation Letter for Mike Cruz

ARIZONA@WORK™
PINAL COUNTY
Innovative Workforce Solutions

Harold Christ, Chair
Pinal County Workforce Development Board

PINAL COUNTY
WIDE OPEN OPPORTUNITY

Mike Goodman, Chair
Pinal County Board of Supervisors

Leo Lew
County Manager

In accordance with ***Article VII-Terms of Office*** of the Pinal County Workforce Development Board By-Laws, the individual(s) below were recommended for appointment to sit on the Pinal County Workforce Development Board.

- **Mike Cruz, Lucid Motors (Business Sector)**
  Term: **3/07/2024-3/06/2026**

Harold Christ

ARIZONA@WORK Pinal County Chair

ARIZONA@WORK Pinal County Chair (Signature/Date)

Mike Goodman

Pinal County Board of Supervisors Chairman (Print)

Pinal County Board of Supervisors Chairman (Signature/Date)

PINAL COUNTY
WIDE OPEN OPPORTUNITY

AGENDA ITEM

March 6, 2024 ADMINISTRATION BUILDING A
FLORENCE, ARIZONA

REQUESTED BY:

Funds #:

Dept. #:

Dept. Name: Information Technology

Director: Robert Stanley

BRIEF DESCRIPTION OF AGENDA ITEM AND REQUESTED BOARD ACTION:

Discussion/approval/disapproval to retroactively submit a grant application to the Arizona Department of Homeland Security, State Homeland Security Grant Program for $71,773. If awarded, Pinal County will execute a Memorandum of Understanding with the State of Arizona to administer the project on behalf of Pinal County communities. The project includes licensing of cybersecurity software. (Chris Combs/Robert Stanley)

BRIEF DESCRIPTION OF THE FISCAL CONSIDERATIONS AND/OR EXPECTED FISCAL IMPACT OF THIS AGENDA ITEM:

There is no fiscal impact. The MOU will allow the state to retain the award.

BRIEF DESCRIPTION OF THE EXPECTED PERFORMANCE IMPACT OF THIS AGENDA ITEM:

MOTION:

Approve as presented.

History

Time	Who	Approval
2/26/2024 11:05 AM	Information Technology	Yes
2/26/2024 11:25 AM	County Attorney	Yes
2/27/2024 7:42 AM	Budget Office	Yes
2/28/2024 9:36 AM	County Manager	Yes
2/28/2024 9:50 AM	Clerk of the Board	Yes

ATTACHMENTS:

Click to download

- Grant approval form
- Application

PINAL COUNTY
WIDE OPEN OPPORTUNITY

Board of Supervisors Grant Request

Board of Supervisors meeting date: _____

Department seeking grant: _____

Name of Granting Agency: _____

Name of Grant Program: _____

Project Name: _____

Amount requested: _____

Match amount, if applicable: _____

Application due date: _____

Anticipated award date/fiscal year: _____

What strategic priority/goal does this project address?: _____

Applicable Supervisor District: _____

Brief description of project:

Approval received per Policy 8.20: _____ OnBase Grant #: _____

Please select one:

Discussion/Approve/Disapproval consent item _____

New item requiring discussion/action _____

Public Hearing required _____

Please select all that apply:

Request to submit the application _____

Retroactive approval to submit _____

Resolution required _____

Request to accept the award _____

Request to approve/sign an agreement _____

Budget Amendment required _____

Program/Project update and information _____

2024 State Homeland Security Grant Application

Submitted by Heather Patel on January 12, 2024 - 2:47pm

PROJECT ADMINISTRATION

PROJECT DESCRIPTION

Project Title: Cyber Security Protection for Local and Tribal Governments

Project Summary:
Pinal County, on behalf of the East region, is applying for the Arizona Department of Homeland Security grant to provide important cyber security products to local and tribal governments in Arizona. Pinal County, on behalf of the <East, West, North, South, Central> region, will MOU the award to the State of Arizona, Department of Homeland Security (AZDOHS) to continue the existing Statewide Cyber Readiness Program. For the previous five years, 299 local and tribal governments have participated in the Statewide Cyber Readiness Program awarded to the AZDOHS to leverage the buying power of the AZDOHS Cyber Command team, and the expertise of AZDOHS and the multi-jurisdictional team created for the current program. Many local and tribal governments have cyber gaps because they do not have the resources, knowledge of the budget to purchase and install best practice cyber security tools to protect their data and their networks from compromise. Since local, tribal, and state government systems interconnect to each other, we are all at significant risk of attack or compromise. Modeled after a successfully implemented enterprise cybersecurity program at the State, AZDOHS has worked closely with our regional partners to provide a selection of best-in-class cybersecurity products to our most vulnerable local and tribal governments. These products can fit into three categories: 1) visibility of threats or gaps, 2) hunting for compromises, or 3) education of users. For FFY 2020, 2021, 2022, and 2023, Pinal County was awarded Arizona Department of Homeland Security SHSGP grant for Security Awareness and Anti-Phishing Training (SAT), Advanced Endpoint Protection (AEP), Multi Factor Authentication (MFA), and Web Application Firewall (WAF). The program saw a year-over-year increase in awarded funds due to the significant demand and success of the Statewide Cyber Readiness Program. For more information visit: https://azdohs.gov/statewide-cyber-readiness-grant-program A multi-jurisdictional team was developed to notify local and tribal governments statewide of the products and licenses available and to assist the organizations with on-boarding and deploying these cybersecurity products to their organizations. Our primary objective and priority is the continuity and sustainment of the current Statewide Cyber Readiness Program. To sustain the Program, Pinal County, on behalf of the East region, and four other local governments in each of the five AZ Homeland Security regions are each applying for a portion of the total program. Reduction or elimination of this grant would require some or all program participants to discontinue use of these cyber products increasing risk to systems and data and negating the efforts of the applicants to onboard and operationalize these products. This grant application will identify the primary priority (Priority 1) in the Funding Priorities section of this application for sustainment of the current program ensuring existing participation and product use isn’t affected.

Organization Name:
Pinal County

COMMENTS / REVIEW

Funding Year: 2024

Performance Period: October 1, 2024 to September 30, 2025

Award Letter Date: September 20, 2024

Award Docs Return by Date: Friday, Jan. 31, 2025

Award Exp Start Date: Tuesday, Oct. 1, 2024

EHP: A

APPLICANT CONTACT

Applicant Title:
Grants Manager

Applicant Name:
Heather Patel

Applicant Email:
heather.patel@pinal.gov

Applicant Office Phone:
(520) 866-6422

Address:
31 North Pinal Street
Florence AZ 85132-3027

HEAD OF AGENCY CONTACT

Head of Agency Title:
Chairman of the Board of Supervisors

Head of Agency Name:
Mike Goodman

Head of Agency Email:
BOSChair@pinal.gov

Head of Agency Office Phone:
(520) 866-6068

PROGRAM CONTACT

Program Contact Title:
Infrastructure Manager

Program Contact Name:
Chris Combs

Program Contact Email:
chris.combs@pinal.gov

Program Contact Office Phone:
(520) 866-6650

FISCAL CONTACT

Fiscal Contact Title:
Office of Budget and Finance Director

Fiscal Contact Name:
Angeline Woods

Fiscal Contact Email:
angeline.woods@pinal.gov

Fiscal Contact Office Phone:
(520) 866-6676

Address:
31 North Pinal Street
Florence AZ 85132-3027

AGENCY DEMOGRAPHICS

Number of sworn personnel: 218

Specialized Team Project Supports: Other

Other Specialized Team Project Supports: Information Security within the Information Technology Department

Number of personnel on Specialized Team Project Supports: 2

INITIATIVES

Initiatives:
Strengthen Cybersecurity Capabilities

Is this project a Law Enforcement Terrorism Prevention Activity (LETPA)?: No

Project Type: Establish/enhance cyber security program

Is this project also submitted in UASI?: No

Does this project support a National Priority Area?:
Yes

Select a National Priority Area:
Enhancing Cybersecurity

Explain how this project supports the National Priority Area you selected above.:
This project supports the National Priority Areas of Cybersecurity by providing advanced endpoint protection and professional services to implement cybersecurity capabilities across the state. Advanced endpoint protection monitor, detect, and prevent cyber threats including malware, ransomware, and zero-day attacks will have a significant impact in lessening the potential devastation should a cyberattack occur. Without these tools and professional services to ensure the tools are adequately deployed we leave our cyber systems vulnerable.

THREAT PROFILE

1. What is the terrorism threat your area faces that will be addressed by this project?:
Cyber Attack

2. Explain how this project will assist your agency in preventing/protecting against/mitigating/responding to/recovering from all hazards events and threats including your chosen terrorism threat in question 1.:
To increase visibility and protection of threats or fill cyber gaps, assist the hunting and detection of compromises, and provide professional services to implement the software that provide these protections and capabilities.

3. Mission Area > Core Capability:
- Protect › Cybersecurity

3a. Capability Target > POETE > Gap:
- Every 1 year, appropriate authorities review and update cyber incident plans/annexes based on evolving threats covering 25 publicly managed and/or regulated critical infrastructure facilities. › Equipment › Controlling electronic access
- Every 1 year, appropriate authorities review and update cyber incident plans/annexes based on evolving threats covering 25 publicly managed and/or regulated critical infrastructure facilities. › Equipment › Detecting malicious activity
- Every 1 year, appropriate authorities review and update cyber incident plans/annexes based on evolving threats covering 25 publicly managed and/or regulated critical infrastructure facilities. › Equipment › Protective measures
- Every 1 year, appropriate authorities review and update cyber incident plans/annexes based on evolving threats covering 25 publicly managed and/or regulated critical infrastructure facilities. › Equipment › Technical countermeasures
- Every 1 year, appropriate authorities review and update cyber incident plans/annexes based on evolving threats covering 25 publicly managed and/or regulated critical infrastructure facilities. › Training › End-user awareness

4. What resources does your agency currently have to support the capability target selected above?:
The State of Arizona has implemented the recommended cyber controls/products across more than 86 state agencies and we can manage the addition of other local and tribal agencies using the same products and processes. We have also established a multi-jurisdictional team (state and local representation) to manage the current grant award.

5. How will this project help your agency to achieve the capability target selected above?:
This helps to protect local, tribal, and state networks and data because local, tribal and state networks are interconnected. We're only as strong as our most vulnerable. This project will provide cybersecurity products that will protect systems and data against advanced threats over and above traditional anti-virus (AEP). This project will also provide professional services to implement these cybersecurity software.

6. Will your agency continue to maintain, support and sustain this capability with other funding sources if Homeland Security grant funds were no longer available?: No

6a. Describe the reasons your agency will not continue to maintain/sustain this capability.:
No, our agency does not have the budget and is unable to spend our organization's budget to support other governments. To maintain controls each participating local and tribal government would need to fund their own licenses.

7. Does this project support a NIMS typed resource?: No

8. Has your agency previously been awarded Homeland Security Grant Program (SHSGP, UASI and/or OPSG) funding to support this project/capability?: Yes

8a. List the Subrecipient Agreement number and award amounts previously received in support of this capability.:
We were one of 5 AZ Counties that applied for, awarded, and MOUed the award to AZDOHS for Subrecipient Agreements: 220304-02 $76,309, 230307-02 $71,773, and the 2021 award $76,318.

9. Is this a multi-phase project?:
No

10. Will your project benefit more than just your own agency?:
Yes

10a. List which agencies that will have a direct benefit:
The Arizona Statewide Cyber Readiness Program is in our 5th year of operations and had 299 local and tribal government organizations apply to participate in our program to receive one or more of the 4 cyber security protection products funded by this gran

10b. Describe in detail how the agencies mentioned in question 10a will benefit.:
Local and Tribal governments without proper knowledge, resources and funding to implement sophisticated cyber controls will benefit through the standards and best practices based approach proven successful at the State of Arizona government. The state, local and tribal governments will also benefit from economies of scale receiving significantly lower prices by purchasing bulk licenses through competitive state contracts. The current multi-jurisdictional team deploying four cyber security products currently also demonstrates the ability and benefit to build and sustain government partnerships.

PLANNED PROJECT ACTIVITIES

PLANNED ACTIVITIES FOR QUARTER #1

Activity #1 (October 1 – December 31): MOU the award to AZDOHS. AZDOHS will begin purchase of product(s). AZDOHS will re-engage with Liaison and Planning teams.

PLANNED ACTIVITIES FOR QUARTER #2

Activity #2 (January 1 – March 31): AZDOHS and Liaison team will re-engage participating organizations to continue deployment and use of the product(s). Communicate to local and tribal organizations if additional licenses are available.

PLANNED ACTIVITIES FOR QUARTER #3

Activity #3 (April 1 – June 30): AZDOHS and Liaison team will on-board additional organizations if additional licenses are made available.

PLANNED ACTIVITIES FOR QUARTER #4

Activity #4 (July 1 – September 30): AZDOHS and Liaison team will continue and conclude deployment and report on KPIs and metrics.

EQUIPMENT REQUEST

Equipment Item	Age/Condition of Equipment	Qty Requested	Cost Per Unit	Total Requested	Total Awarded
Item Name: Advanced Endpoint Protection (AEP) licensing **Description:** Advanced Endpoint Protection (AEP) software to be deployed on local and tribal government personal computers (PC's) and other systems to provide enhanced malware and advanced persistent threat (APT) endpoint protection above traditional anti-virus.		1,601	$24	$38,424	$0
Item Name: Professional Services: supplies **Description:** Professional Services for installation/customization of tools		1	$33,349	$33,349	$0
				$71,773	**$0**

Equipment Requested Total: $71,773

Equipment Awarded Total: $0

TRAINING REQUEST

Training Item	Backfill / Overtime	Workshops / Conferences	Trainers / Contractors / Consultants	Supplies	Travel	Total Requested	Total Awarded
	$0	$0	$0	$0	$0	$0	$0
						$0	**$0**

Training Request Total: $0

Training Award Total: $0

Does your agency have an IPP?:
No

EXERCISE REQUEST

Description	Exercise Type	Backfill / Overtime	Workshops / Conference	Contractors / Consultants	Supplies	Travel	Total Requested	Total Awarded
		$0	$0	$0	$0	$0	$0	$0
							$0	**$0**

Exercise Requested Total: $0

Exercise Awarded Total: $0

Does your agency have an IPP?:
No

PLANNING REQUEST

Description	Backfill and Overtime	Workshops / Conference	Staff / Contractors / Consultants	Materials	Travel	Total Requested	Total Awarded
	$0	$0	$0	$0	$0	$0	$0
						$0	**$0**

Planning Request Total: $0

Planning Award Total: $0

ORGANIZATION ACTIVITY REQUEST

Description	Overtime	Operational Expenses	Staff / Contractors / Consultants	Total Requested	Total Awarded
	$0	$0	$0	$0	$0
				$0	**$0**

Organizational Activity Request Total: $0

Organizational Activity Award Total: $0

MANAGEMENT AND ADMINISTRATION

Description	Backfill / Overtime	Personnel / Contractor / Consultant	Travel	Materials	Total Requested
	$0	$0	$0	$0	$0
					$0

M&A Total Requested: $0

M&A Awarded Total: $0

PROJECT REQUEST TOTAL

Cost Category	Total Requested	Total Awarded
Equipment Total	$71,773	$0
Exercise Total	$0	$0
Training Total	$0	$0
Planning Total	$0	$0
Organization Total	$0	$0
Project Total	**$71,773**	**$0**

	M&A Amount Requested	M&A Amount Awarded
Management and Administration	$0	$0

	Indirect Costs Requested	Indirect Costs Approved
Indirect Costs	No	No

INDIRECT COSTS

Is your agency seeking indirect costs?: No

Indirect Costs Approved: No

FUNDING PRIORITIES

Funding Details:
We can accept partial funding. However, as this is a statewide project. Any reduction of the recommended allocation will result in less licenses to support entities in the regions across the State.

Can partial funding be accepted in support of this project?: Yes

PINAL COUNTY
WIDE OPEN OPPORTUNITY

AGENDA ITEM

March 6, 2024 ADMINISTRATION BUILDING A
FLORENCE, ARIZONA

REQUESTED BY:

Funds #: 196

Dept. #: 311

Dept. Name: Development Services-Public Works

Director: Joe Ortiz

BRIEF DESCRIPTION OF AGENDA ITEM AND REQUESTED BOARD ACTION:

Discussion/approval/disapproval to submit a grant application to the Arizona Department of Emergency Management's Emergency Management Performance Grant for $440,814.40. Match is required in the amount of $440,814.40. This grant will be used by the Office of Emergency Management Branch of Development Services for the operations budget. (AD23-013) (Courtney Prock/Kore Redden/Joe Ortiz)

BRIEF DESCRIPTION OF THE FISCAL CONSIDERATIONS AND/OR EXPECTED FISCAL IMPACT OF THIS AGENDA ITEM:

General fund will pay the 50% match which is $440,814.40.

BRIEF DESCRIPTION OF THE EXPECTED PERFORMANCE IMPACT OF THIS AGENDA ITEM:

There are expected performance impacts with this grant. The OEM will be responsible for being NIMS compliant.

MOTION:

Approved as presented.

History

Time	Who	Approval
2/21/2024 1:05 PM	County Attorney	Yes
2/21/2024 1:22 PM	Grants/Hearings	Yes
2/22/2024 7:47 AM	Budget Office	Yes
2/27/2024 5:31 PM	County Manager	Yes
2/28/2024 9:04 AM	Clerk of the Board	Yes

ATTACHMENTS:

Click to download

Grant Requested

PINAL COUNTY
WIDE OPEN OPPORTUNITY

Board of Supervisors Grant Request

Board of Supervisors meeting date: _____

Department seeking grant: _____

Name of Granting Agency: _____

Name of Grant Program: _____

Project Name: _____

Amount requested: _____

Match amount, if applicable: _____

Application due date: _____

Anticipated award date/fiscal year: _____

What strategic priority/goal does this project address?: _____

Applicable Supervisor District: _____

Brief description of project:

Approval received per Policy 8.20: _____ OnBase Grant #: _____

Please select one:

Discussion/Approve/Disapproval consent item _____

New item requiring discussion/action _____

Public Hearing required _____

Please select all that apply:

Request to submit the application _____

Retroactive approval to submit _____

Resolution required _____

Request to accept the award _____

Request to approve/sign an agreement _____

Budget Amendment required _____

Program/Project update and information _____

PINAL COUNTY
WIDE OPEN OPPORTUNITY

AGENDA ITEM

March 6, 2024 ADMINISTRATION BUILDING A
FLORENCE, ARIZONA

REQUESTED BY:

Funds #: 64

Dept. #: 311

Dept. Name: Development Services-Public Works

Director: Joe Ortiz

BRIEF DESCRIPTION OF AGENDA ITEM AND REQUESTED BOARD ACTION:

Discussion/approval/disapproval of Resolution No. 030624-RD23-124 releasing Maintenance Bond No. US00105132SU21A, associated with San Tan Highlands, located in Section 13, Township 3 South, Range 7 East. Supervisor District #2. (RD23-124) (Christopher Wanamaker/Joe Ortiz)

BRIEF DESCRIPTION OF THE FISCAL CONSIDERATIONS AND/OR EXPECTED FISCAL IMPACT OF THIS AGENDA ITEM:

There are no expected fiscal considerations or impacts associated with this agenda item.

BRIEF DESCRIPTION OF THE EXPECTED PERFORMANCE IMPACT OF THIS AGENDA ITEM:

There are no expected performance impacts associated with this agenda item.

MOTION:

Approved as presented.

History

Time	Who	Approval
2/22/2024 12:29 PM	County Attorney	Yes
2/22/2024 12:29 PM	Budget Office	Yes
2/27/2024 4:03 PM	County Manager	Yes
2/28/2024 9:05 AM	Clerk of the Board	Yes

ATTACHMENTS:

Click to download

- Resolution
- PM

When recorded, return to:
Clerk of the Board
P.O. Box 827
Florence AZ 85132

RESOLUTION NO. _____

A RESOLUTION OF THE PINAL COUNTY, ARIZONA, BOARD OF SUPERVISORS RELEASING MAINTENANCE BOND NO. US00105132SU21A IN CONNECTION WITH SAN TAN HIGHLANDS, LOCATED IN SECTION 13, TOWNSHIP 3 SOUTH, RANGE 7 EAST, SUPERVISOR DISTRICT 2.

WHEREAS, this matter has been brought before the Pinal County Board of Supervisors by a request from the subdivision developer (the "**Subdivider**") in connection with San Tan Highlands (the "**Subdivision**"); and,

WHEREAS, in order to assure the satisfactory completion of construction of all required subdivision improvements in connection with the Subdivision, the Subdivider posted Maintenance Bond No.US00105132SU21A in the amount of Forty Thousand Seven Hundred Forteen and 00/100 Dollars ($40,714.00) issued by XL Specialty Insurance Company (the "**Maintenance Bond**"); and,

WHEREAS, the Pinal County Department of Public Works has determined that construction of all required subdivision improvements in connection with the Subdivision are in conformance with Pinal County standards and that the Maintenance Bond may be released.

NOW, THEREFORE, BE IT RESOLVED by the Pinal County Board of Supervisors that Maintenance Bond No. US00105132SU21A in the amount of Forty Thousand Seven Hundred Forteen and 00/100 Dollars ($40,714.00) issued by XL Specialty Insurance Company, attached hereto as **Exhibit "A"** is released upon execution of this Resolution; and

BE IT FURTHER RESOLVED, that this Resolution shall become effective upon its recordation with the Office of the County Recorder, Pinal County, Arizona.

PASSED AND ADOPTED this _____ day of _____, 2024, by the PINAL COUNTY BOARD OF SUPERVISORS.

_____
Chair of the Board

ATTEST:

_____
Clerk/Deputy Clerk of the Board

APPROVED AS TO FORM:

_____
Deputy County Attorney

EXHIBIT "A"

TO

RESOLUTION NO. _____

[Maintenance Bond No. US00105132SU21A]

XL Specialty Insurance Company
Surety's Name

MAINTENANCE BOND
Bond No. US00105132SU21A

KNOW ALL MEN BY THESE PRESENT, That we, Highland Communities, LLC (Principle's Name)
1465 South 174th Street, Gilbert, AZ 85296 (Principal's Address), hereinafter called Principal, and
XL Specialty Insurance Company (Surety's Name), 70 Seaview Avenue, Stamford, CT 06902 (Surety's Address),
hereinafter called Surety, are held and firmly bound unto Pinal County, Arizona (Obligee's Name)
31 North Pinal Street, Building F, PO Box 2973, Florence, AZ 85132 (Obligee's Address), hereinafter called Obligee, in
the full and just sum of Forty Thousand Seven Hundred Fourteen and No/100 Dollars
($ 40,714.00), lawful money of the United States, for the payment of which we bind ourselves, our heirs, administrators, executors, successors and assigns, jointly and severally, firmly by these presents.

WHEREAS, said Obligee has entered into a certain agreement with Highland Communities, LLC (Owner's Name)
a portion of which requires a 1 year(s) maintenance bond covering workmanship and materials for the List of Improvements covered, hereinafter called Improvements, at San Tan Highlands (Project Name),
Pinal County, Arizona (Project Address), which Improvements have been or are about to be completed and accepted.

NOW, THEREFORE, if said improvements shall be free from defects of workmanship and materials, general wear and tear excepted, for a period of 1 year(s) from the date of acceptance of said improvements, then this obligation shall be null and void; otherwise to remain in full force and effect.

Signed, sealed and dated this 29th day of July, 2021.

Highland Communities, LLC
Principal's Name

By: Mark D. B

Witness as to Principal

XL Specialty Insurance Company
Surety's Name

By: James T. Smith, Attorney-in-Fact

Barbara D

Witness as to Surety Barbara Duncan

Power of Attorney
XL Specialty Insurance Company
XL Reinsurance America Inc.

THIS IS NOT A BOND NUMBER
LIMITED POWER OF ATTORNEY
XL 1612913

KNOW ALL MEN BY THESE PRESENTS: That XL Specialty Insurance Company, a Delaware insurance companies with offices located at 505 Eagleview Blvd., Exton, PA 19341, and XL Reinsurance America Inc., a New York insurance company with offices located at 70 Seaview Avenue, Stamford, CT 06902, , do hereby nominate, constitute, and appoint:

James T. Smith, Deborah S. Neichter, Brook T. Smith, Raymond M. Hundley, Jason D. Cromwell, Michele D. Lacrosse

each its true and lawful Attorney(s)-in-fact to make, execute, attest, seal and deliver for and on its behalf, as surety, and as its act and deed, where required, any and all bonds and undertakings in the nature thereof, , for the penal sum of no one of which is in any event to exceed $100,000,000.00.

Such bonds and undertakings, when duly executed by the aforesaid Attorney (s) - in - Fact shall be binding upon each said Company as fully and to the same extent as if such bonds and undertakings were signed by the President and Secretary of the Company and sealed with its corporate seal.

The Power of Attorney is granted and is signed by facsimile under and by the authority of the following Resolutions adopted by the Board of Directors of each of the Companies on the 26th day of July 2017.

RESOLVED, that Gary Kaplan, Daniel Riordan, Maria Duhart, Gregory Boal and Kevin Mirsch are hereby appointed by the Board as authorized to make, execute, seal and deliver for and on behalf of the Company, any and all bonds, undertakings, contracts or obligations in surety or co-surety with others and that the Secretary or any Assistant Secretary of the Company be and that each of them hereby is authorized to attest the execution of any such bonds, undertakings, contracts or obligations in surety or co-surety and attach thereto the corporate seal of the Company.

RESOLVED, FURTHER, that Gary Kaplan, Daniel Riordan, Maria Duhart, Gregory Boal and Kevin Mirsch each is hereby authorized to execute powers of attorney qualifying the attorney named in the given power of attorney to execute, on behalf of the Company, bonds and undertakings in surety or co-surety with others, and that the Secretary or any Assistant Secretary of the Company be, and that each of them is hereby authorized to attest the execution of any such power of attorney, and to attach thereto the corporate seal of the Company.

RESOLVED, FURTHER, that the signature of such officers named in the preceding resolutions and the corporate seal of the Company may be affixed to such powers of attorney or to any certificate relating thereto by facsimile, and any such power of attorney or certificate bearing such facsimile signatures or facsimile seal shall be thereafter valid and binding upon the Company with respect to any bond, undertaking, contract or obligation in surety or co-surety with others to which it is attached.

IN WITNESS WHEREOF, the XL SPECIALTY INSURANCE COMPANY has caused its corporate seal to be hereunto affixed, and these presents to be signed by its duly authorized officers this March 2nd, 2021.

XL SPECIALTY INSURANCE COMPANY

XL SPECIALTY INSURANCE COMPANY CORPORATE SEAL DELAWARE

by: Gregory Boal, VICE PRESIDENT

STATE OF PENNSYLVANIA
COUNTY OF CHESTER

Attest: Kevin M. Mirsch, ASSISTANT SECRETARY

On this 2nd day of March, 2021, before me personally came Gregory Boal to me known, who, being duly sworn, did depose and say: that he is Vice President of XL SPECIALTY INSURANCE COMPANY, described in and which executed the above instrument; that he knows the seals of said Companies; that the seals affixed to the aforesaid instrument is such corporate seals and were affixed thereto by order and authority of the Boards of Directors of said Companies; and that he executed the said instrument by like order.

Commonwealth of Pennsylvania - Notary Seal
S. Grace Freed-Brown, Notary Public
Chester County
My commission expires March 5, 2022
Commission number 1322812
Member, Pennsylvania Association of Notaries

S. Grace Freed-Brown, NOTARY PUBLIC

STATE OF PENNSYLVANIA
COUNTY OF CHESTER

I, Kevin M. Mirsch, Assistant Secretary of XL SPECIALTY INSURANCE COMPANY, a corporation of the State of Delaware, do hereby certify that the above and forgoing is a full, true and correct copy of a Power of Attorney issued by said Companies, and that I have compared same with the original and that it is a correct transcript therefrom and of the whole of the original and that the said Power of Attorney is still in full force and effect and has not been revoked.

IN WITNESS WHEREOF, I have hereunto set my hand and affixed the seal of said Corporation, at the City of Exton, this 29th day of July 2021.

XL SPECIALTY INSURANCE COMPANY CORPORATE SEAL DELAWARE

Kevin M. Mirsch, ASSISTANT SECRETARY

IN WITNESS WHEREOF, XL REINSURANCE AMERICA INC. has caused its corporate seal to be hereunto affixed, and these presents to be signed by its duly authorized officers this 2nd day of March, 2021.

XL REINSURANCE AMERICA INC. CORPORATE SEAL NEW YORK

XL REINSURANCE AMERICA INC.

by: Gregory Boal, VICE PRESIDENT

Attest: Kevin M. Mirsch, ASSISTANT SECRETARY

STATE OF PENNSYLVANIA
COUNTY OF CHESTER

On this 2nd day of March, 2021, before me personally came Gregory Boal to me known, who, being duly sworn, did depose and say: that he is Vice President of XL REINSURANCE AMERICA INC., described in and which executed the above instrument; that he knows the seal of said Corporation; that the seal affixed to the aforesaid instrument is such corporate seal and was affixed thereto by order and authority of the Board of Directors of said Corporation, and that he executed the said instrument by like order.

Commonwealth of Pennsylvania - Notary Seal
S. Grace Freed-Brown, Notary Public
Chester County
My commission expires March 5, 2022
Commission number 1322812
Member, Pennsylvania Association of Notaries

S. Grace Freed-Brown, NOTARY PUBLIC

STATE OF PENNSYLVANIA
COUNTY OF CHESTER

I, Kevin M. Mirsch, Assistant Secretary of XL REINSURANCE AMERICA INC. a corporation of the State of New York, do hereby certify that the person who executed this Power of Attorney, with the rights, respectively of XL REINSURANCE AMERICA INC., do hereby certify that the above and forgoing is a full, true and correct copy of a Power of Attorney issued by said Corporation, and that I have compared same with the original and that it is a correct transcript therefrom and of the whole original and that the said Power of Attorney is still in full force and effect and has not been revoked.

IN WITNESS WHEREOF, I have hereunto set my hand and affixed the seal of said Corporation, at the City of Exton, this ___ day of _____ _____.

XL REINSURANCE AMERICA INC. CORPORATE SEAL NEW YORK

Kevin M. Mirsch, ASSISTANT SECRETARY

This Power of Attorney may not be used to execute any bond with an inception date after 3/2/2023

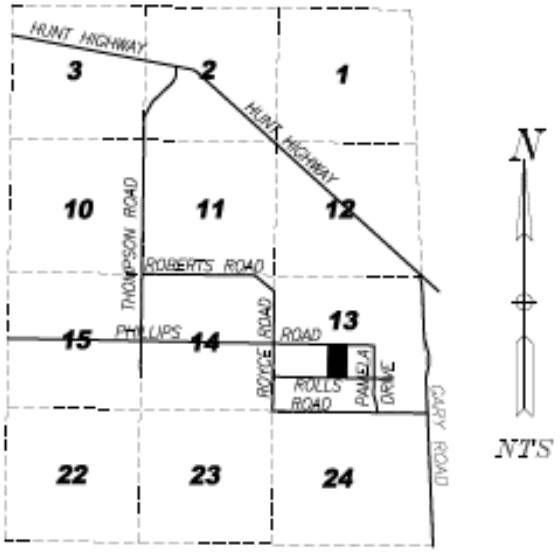

VICINITY MAP

N.T.S.

PINAL COUNTY
WIDE OPEN OPPORTUNITY

AGENDA ITEM

March 6, 2024 ADMINISTRATION BUILDING A
FLORENCE, ARIZONA

REQUESTED BY:

Funds #: 64

Dept. #: 311

Dept. Name: Development Services-Public Works

Director: Joe Ortiz

BRIEF DESCRIPTION OF AGENDA ITEM AND REQUESTED BOARD ACTION:

Discussion/approval/disapproval of Grant of Electric System Easement by Pinal County, a political subdivision of the State of Arizona (Owner) to Electrical District Number Two. Supervisor District #3. (GA23-027) (Celeste Garza/Joe Ortiz)

BRIEF DESCRIPTION OF THE FISCAL CONSIDERATIONS AND/OR EXPECTED FISCAL IMPACT OF THIS AGENDA ITEM:

There aren't any expected fiscal considerations or impacts to General Fund associated with this agenda item.

BRIEF DESCRIPTION OF THE EXPECTED PERFORMANCE IMPACT OF THIS AGENDA ITEM:

There are no expected performance impacts associated with this agenda item.

MOTION:

Approved as presented.

History

Time	Who	Approval
2/21/2024 1:06 PM	County Attorney	Yes
2/22/2024 7:39 AM	Budget Office	Yes
2/28/2024 9:33 AM	County Manager	Yes
2/28/2024 9:50 AM	Clerk of the Board	Yes

ATTACHMENTS:

Click to download

- Grant Easement
- PM

When recorded return to:
Electrical District #2
P. O. Box 548
Coolidge, AZ 85128

GRANT OF ELECTRIC SYSTEM EASEMENT

THIS GRANT OF ELECTRIC SYSTEM EASEMENT (this "Agreement") is made effective this ____ day of _____, 2024, between Pinal County, Arizona, a political subdivision of the State of Arizona ("Owner"), and Electrical District Number Two, Pinal County, Arizona, a political subdivision of the State of Arizona ("District").

Recitals

A. Owner is the fee owner of certain real property in Pinal County, Arizona, more particularly described on Exhibit A, attached hereto and made a part hereof by reference.

B. Owner desires to grant an easement to District for certain Facilities (as hereinafter defined), as more particularly described and depicted on Exhibit B attached hereto and made a part hereof by reference (the "Easement Premises"), on the terms and conditions set forth in this Agreement.

Agreement

In consideration of the sum of ten dollars and other good and valuable consideration, the receipt and sufficiency of which is hereby acknowledged, the parties hereby agree as follows:

1. Grant of Easement. Owner hereby grants unto District and its agents, employees, contractors, permittees, successors and assigns, jointly with or separately from District, the exclusive and perpetual right, privilege, easement and authority to construct, reconstruct, install, alter, replace, improve, remove, repair, operate, inspect and maintain aboveground and underground electric distribution and transmission systems and all related uses thereof, together with all below and above ground installations and facilities which District may now or hereafter deem necessary or convenient in connection therewith, including without limitation all poles, towers, anchors, conduits, distribution and signal wires, insulators, switches and switch cabinets, splice boxes, transformers, conductors, cables, pipes, vaults, manholes and other necessary or convenient appurtenances, improvements, equipment, appliances, facilities and fixtures (collectively, the "Facilities") relating to the distribution and transmission of electric power, telephone, audio, visual, internet or other communication or data transmission services in, over, under, across, along and upon the Easement Premises, as District may now or hereafter deem convenient or necessary from time to time, together with full and free vehicular and pedestrian ingress and egress over, across and upon the Easement Premises and over, across and upon all property of Owner adjacent thereto as may be necessary to provide access to and from the Easement Premises for the purposes herein permitted and the right to use lands adjacent to said easement for access, storage of dirt, fill or other construction materials or equipment or otherwise during temporary periods of construction.

2. Conditions of Easement.

2.1 District, its agents, employees, contractors and permittees and its successors and assigns, shall have the right (but not the obligation) to trim, cut and clear brush, trees, timber, or other vegetation, structures, and all fire hazards on the Easement Premises, and the right to remove trees, if any, located on lands of Owner beyond the limits of the Easement Premises, whenever in its judgment the same shall be necessary for the convenient and safe exercise of the rights herein granted. District shall have the right to assess the costs of its activities pursuant to this Section against Owner if such activities are necessitated by breach of Owner's obligations under Section 2.2.

2.2 Owner hereby covenants that no change will be made to the Easement Premises by grading or otherwise that would materially adversely affect District's use and enjoyment of the Easement Premises for the purposes described in Section 1 without the prior written consent of District in its sole discretion. Without limiting the foregoing, Owner, its successors, assigns or licensees, shall not place, install, construct or maintain or permit to be placed, installed, constructed or maintained any building or other structure, plant or allow the growth or spread of any trees or other vegetation, drill any well, store any materials of any kind, or excavate or alter ground level by cut or fill, within or affecting the Easement Premises, except with the written approval of District in its sole discretion.

2.3 Following any installation, excavation, maintenance, repair, or other activity by District within or adjacent to the Easement Premises, District shall cause the affected area to be restored by District to as close to original condition as is reasonably possible, at the expense of District.

2.4 No delay in the construction of or removal or cessation of use of any Facilities shall be deemed to constitute an abandonment of the Easement Premises or any portion thereof. The rights, title, privileges and authority hereby granted shall continue and be in force unless and until such time as District, its successors, and assigns, shall, by an express written instrument duly recorded with the Official Records of Pinal County, Arizona, permanently abandon its easement with respect to all or any portion of the Easement Premises or any portion thereof, at which time all such rights, title, privileges and authority hereby granted shall terminate with respect to such portion of the Easement Premises. If and when District determines in its sole discretion that it will never have any further use for any portion of the Easement Premises, District will abandon such portion of the Easement Premises upon the request of Owner of fee title thereto.

2.5 District shall have the right (but not the obligation), at its cost, to install, place and maintain on the Easement Premises (a) warning or safety signs regarding the Facilities and (b) safety or security devices, or other protective structures, to protect the Facilities and to prevent access thereto by unauthorized persons.

3. **Binding Effect.** The covenants and agreements herein set forth shall extend and inure in favor and to the benefit of and shall be binding on the heirs, administrators, executors, personal representatives, legal representatives, successors (including successors in ownership and estate), assigns and lessees of Owner and District. Any successor Owners shall immediately provide District with updated ownership information and notice address.

4. **Due Authority.** The individual(s) executing this document on behalf of Owner represents and warrants to District that: (i) he or she is authorized to do so on behalf of the Owner; (ii) he or she has full legal power and authority to bind Owner in accordance with the terms herein and, if necessary, has obtained all required consents or delegations of such power and authority (whether from any partner, owner, spouse, shareholder, director, member, manager, creditor, investor, developer, governmental authority, judicial or administrative body, association or other person or entity); and (iii) the execution, delivery and performance by Owner of this Agreement and all others relating to the easement will not constitute a default under any

agreement to which Owner is a party. The individual executing this Agreement shall indemnify, defend and hold harmless District for, from and against any and all losses, costs, expenses, liabilities, claims, demands and actions of any kind or nature, including court costs and attorneys' fees, arising or accruing as a result of the falsity of any of his or her representations and warranties contained in this Agreement.

5. **Attorneys' Fees.** In the event of any action to enforce the provisions of this Agreement, the prevailing party shall be entitled to receive its costs and attorneys' fees.

6. **Construction.** This Agreement shall be construed in accordance with the laws of the State of Arizona. Section headings and captions contained in this Agreement are inserted only as a matter of convenience and for reference and in no way define, limit, extend or describe the scope of this Agreement or the intent of any provision hereof.

7. **Entire Agreement.** This Agreement contains the entire understanding between the parties, and supersedes any prior understandings and agreements between or among them with respect to the subject matter hereof.

8. **Incorporation by Reference.** Every exhibit or schedule attached to this Agreement and referred to herein is hereby incorporated in this Agreement by reference.

9. **Execution.** This Agreement may be executed in counterparts, all of which taken together shall be deemed one original. If this Agreement is executed by more than one Owner, all references to Owner herein shall be deemed to refer to each and all of such Owners jointly and severally.

10. **Partial Invalidity.** The invalidity of any portion of this Agreement will not affect the validity of the remainder hereof.

11. **No Waiver.** No waiver of any condition or covenant in this Agreement by District or Owner shall be deemed to imply or constitute a further waiver of any other or like condition or covenant in this Agreement.

12. **Control over other Installations.** No other utilities or installations of any kind shall be installed within the Easement Premises without first obtaining the prior written consent of District in its sole discretion. As a condition of granting such consent, District may approve plans and specifications for any such facilities and the means and manner of the installation thereof.

CAUTION: Facilities placed within the Easement Premises may contain high voltage electrical equipment. Notice is hereby given that the location of underground electrical conductors or facilities must be verified as required by Arizona Revised Statutes, § 40-360.21, et. seq., Arizona Blue Stake Law, prior to any excavation. Notice is also hereby given that any activity performed within the Easement Premises shall comply with the Arizona Overhead Powerline Safety Law, Arizona Revised Statutes § 40-360.41-45.

[SIGNATURES ON FOLLOWING PAGES]

SIGNATURE PAGE – DISTRICT

IN WITNESS WHEREOF, the undersigned has executed this Agreement as of the date set forth above.

District: **ELECTRICAL DISTRICT NUMBER TWO, PINAL COUNTY, ARIZONA**,
a political subdivision of the State of Arizona

By: _____
Kenneth W. Robbins, General Manager

Address: P.O. Box 548, Coolidge, Arizona, 85128

State of Arizona)
) ss.
County of Pinal)

This instrument was acknowledged by Kenneth W. Robbins, the General Manager of the District, before me this ___ day of _____ , 2024, on behalf of the District.

My Commission Expires:_____ _____
Notary Public

SIGNATURE PAGE – PINAL COUNTY

PINAL COUNTY, ARIZONA, a political subdivision of the State of Arizona

_____
Chairman of the Board

ATTEST:

_____
Deputy/Clerk of the Board

APPROVED AS TO FORM:

_____
Deputy County Attorney

Note: This instrument is exempt from the real estate transfer fee and affidavit of legal value required under A.R.S. §§ 11-1132 and 11-1133 pursuant to the exemptions set forth in A.R.S. §§ 11-1134(A)(2) and (A)(3).

EXHIBIT A

LEGAL DESCRIPTION – THE PROPERTY

THE NORTH HALF OF THE SOUTHEAST QUARTER OF SECTION 25, TOWNSHIP 6 SOUTH, RANGE 7 EAST OF THE GILA AND SALT RIVER BASE AND MERIDIAN, PINAL COUNTY, ARIZONA.

EXHIBIT B

LEGAL DESCRIPTION AND DEPICTION OF EASEMENT PREMISES

[Attached – Two pages total.]

Exhibit B - Page 1

The West 20.00 feet of the East 75.00 feet of the North half of the Southeast quarter of Section 25, Township 6 South, Range 7 East, of the Gila and Salt River Base and Meridian, Pinal County, Arizona;

AND

The West 45.00 feet of the East 120.00 feet of the South 20.00 feet of the North half of the Southeast quarter of Section 25, Township 6 South, Range 7 East, of the Gila and Salt River Base and Meridian, Pinal County, Arizona.

Comprising an easement area of 0.6 acres more or less.

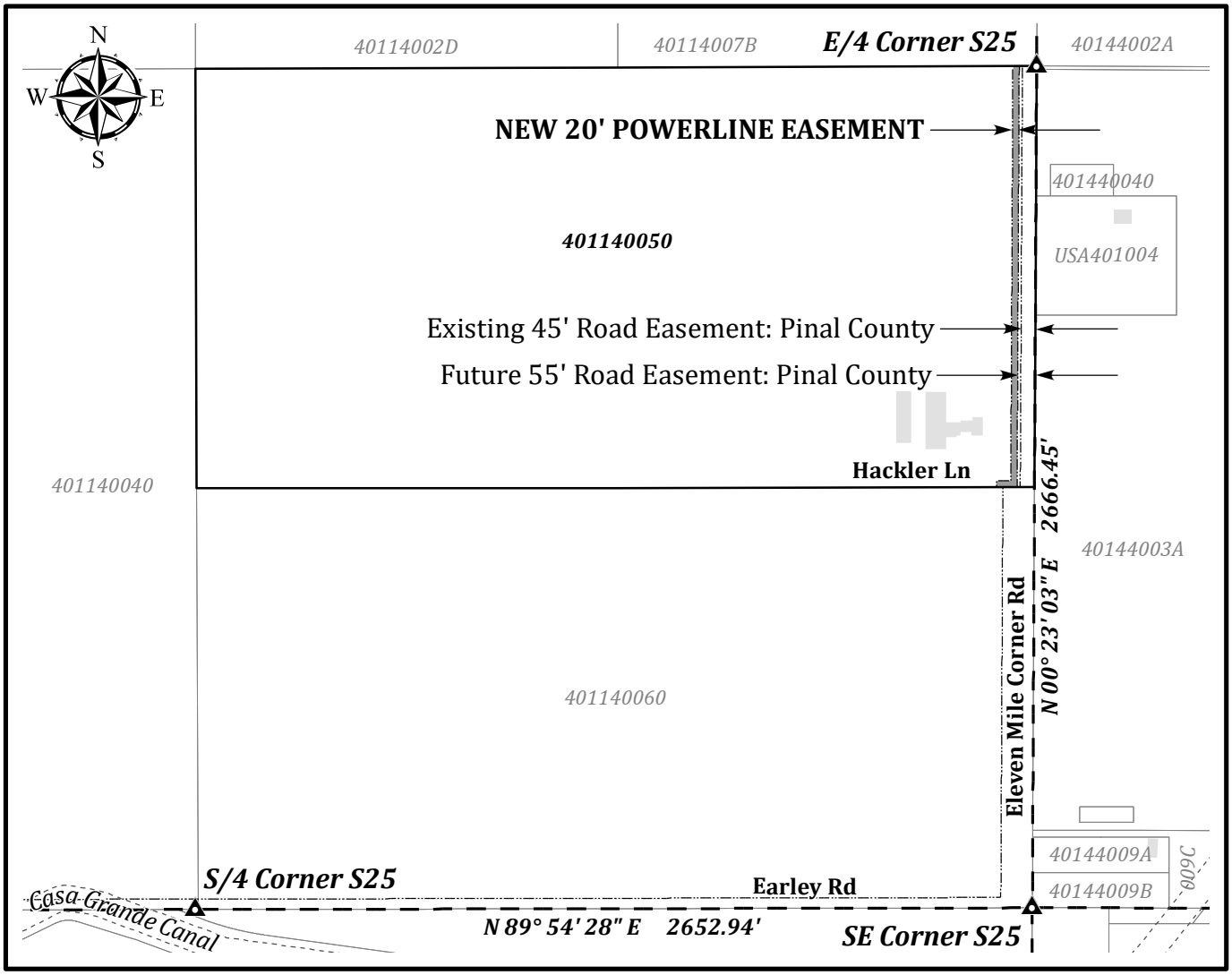

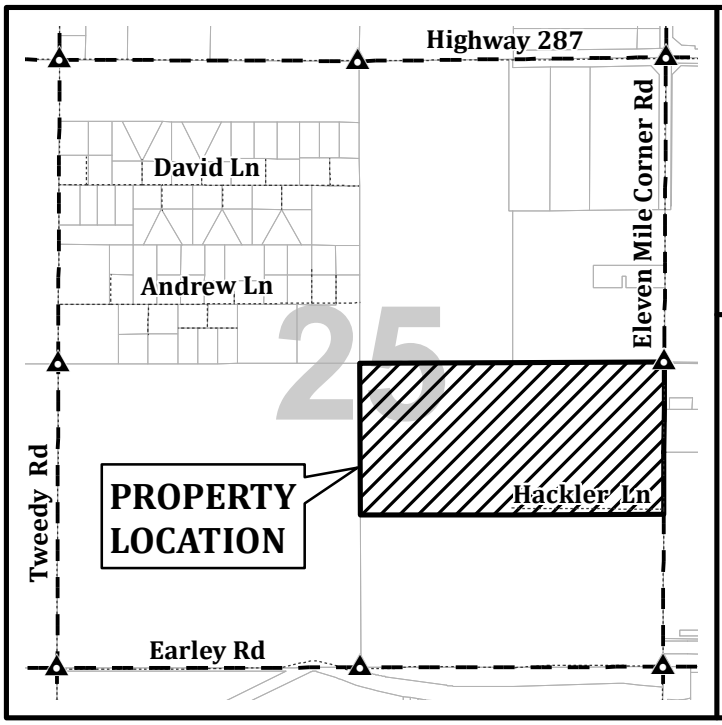

ELECTRICAL DISTRICT #2 POWERLINE EASEMENT EXHIBIT

LOCATED IN THE SOUTHEAST QUARTER OF SECTION 25, TOWNSHIP 6 SOUTH, RANGE 7 EAST, OF THE GILA & SALT RIVER BASE & MERIDIAN, PINAL COUNTY, ARIZONA

[redacted]

DRAWN: TSH
DATE: 01.29.2024

APN: 401-14-0050
HES#: 200046a (25)

Powerline Easement
Tax Parcels
Sections
N
W
E
S
PINAL COUNTY
40114002D
40114007B
401140050
Eleven Mile Corner Rd
Hackler Ln
401140060
User: EmilyL Current Time: 1/9/2024 9:47 AM Path: S:\Engineering\Operations & Technology\Drafting and GIS\GIS\Maps\FY23_24\20240109_LR_SolarDog\Map\SolarDog.aprx

PINAL COUNTY
WIDE OPEN OPPORTUNITY

AGENDA ITEM

March 6, 2024 ADMINISTRATION BUILDING A
FLORENCE, ARIZONA

REQUESTED BY:

Funds #: 64

Dept. #: 311

Dept. Name: Development Services-Public Works

Director: Joe Ortiz

BRIEF DESCRIPTION OF AGENDA ITEM AND REQUESTED BOARD ACTION:

Discussion/approval/disapproval of Resolution No. 030624-RD23-125 initiating the disposition of a portion of public easement within Plat of the Townsite of Randolph. Supervisor District #3. (RD23-125) (Celeste Garza/Joe Ortiz)

BRIEF DESCRIPTION OF THE FISCAL CONSIDERATIONS AND/OR EXPECTED FISCAL IMPACT OF THIS AGENDA ITEM:

There are no expected fiscal considerations or impacts associated with this agenda item.

BRIEF DESCRIPTION OF THE EXPECTED PERFORMANCE IMPACT OF THIS AGENDA ITEM:

There are no expected performance impacts associated with this agenda item.

MOTION:

Approved as presented.

History

Time	Who	Approval
2/21/2024 2:30 PM	County Attorney	Yes
2/21/2024 5:04 PM	Budget Office	Yes
2/23/2024 4:32 PM	County Manager	Yes
2/26/2024 10:24 AM	Clerk of the Board	Yes

ATTACHMENTS:

Click to download
Resolution
PM

When recorded return to:
Pinal County Clerk of the Board
P.O. Box 827
Florence AZ 85132

RESOLUTION NO. _____

A RESOLUTION OF THE PINAL COUNTY, ARIZONA, BOARD OF SUPERVISORS INITIATING THE DISPOSITION OF A PORTION OF PUBLIC EASEMENT WITHIN PLAT OF THE TOWNSITE OF RANDOLPH.

WHEREAS, pursuant to Arizona Revised Statutes ("A.R.S.") § 28-6709, and Pinal County Development Services Code Article V, § 7.10.140, the Development Services Department has requested that the Board of Supervisors ("Board") initiate the disposition of a portion of a roadway within Plat of the Townsite of Randolph as legally described and depicted in attached Exhibit A ("Easement"); and

WHEREAS, the Easement was dedicated to the public by the Pinal County Board of Supervisors dated the 9th day of January, 1956; recorded in Docket 142, Page 305 in the Pinal County Recorder's Office; and

WHEREAS, no land adjoining the Easement will be left without access to a public highway; and

WHEREAS, the process for disposition of a portion of a roadway within the County requires notice to the abutting property owner and property owners within the impact area; and

WHEREAS, the Board having considered the request to initiate the disposition of the Easement has determined that adequate cause exists to initiate the process to determine the feasibility, advantages and necessity of said action.

NOW, THEREFORE, IT IS HEREBY RESOLVED by the Pinal County Board of Supervisors that the County Development Services Department shall begin the process for the disposition of the Easement as legally described and depicted in attached Exhibit A,;

PASSED AND ADOPTED this _____ day of _____ 2024, by the PINAL COUNTY BOARD OF SUPERVISORS.

_____
Chairman of the Board

ATTEST:

_____
Clerk/Deputy Clerk of the Board

APPROVED AS TO FORM:

_____
Deputy County Attorney

EXHIBIT A
TO
RESOLUTION NO. _____

[Legal Description]

See following pages.

EXHIBIT A

LEGAL DESCRIPTION

THE WEST 50 FEET OF LOT THREE THROUGH ELEVEN INCLUSIVE, BLOCK SEVENTY SIX, TOWNSITE OF RANDOLPH, ACCORDING TO THE PLAT OF RECORD IN THE OFFICE OF THE COUNTY RECORDER OF PINAL COUNTY, ARIZONA IN DOCKET 02, PAGE 005 AND FEE NUMBER 1978-000049, AND BEING A PORTION OF **PARCEL ONE** DESCRIBED IN RESOLUTION ORDERING ESTABLISHMENT OF A STREET RECORDED IN THE OFFICE OF THE COUNTY RECORDER OF PINAL COUNTY, ARIZONA IN DOCKET 142, PAGE 305. SAID PARCEL ONE MORE PARTICULARLY DESCRIBED IN DOCKET 142, PAGE 305 AS FOLLOWS:

PARCEL #1: THE WEST FIFTY (50) FEET OF LOTS ONE (1) TO FOURTEEN (14), INCLUSIVE, BLOCK SEVENTY SIX (76), TOWNSITE OF RANDOLPH, ACCORDING TO THE PLAT OF RECORD IN THE OFFICE OF THE COUNTY RECORDER OF PINAL COUNTY, ARIZONA, IN POCKET #1, FOLDER #3, FILE #16. **PARCEL #2**: THE WEST SIXTY (60) FEET OF LOTS ONE (1), THREE (3), FIVE (5),SEVEN (7), NINE (9), ELEVEN (11) AND THIRTEEN (13), BLOCK NINETY-THREE (93), TOWNSITE OF RANDOLPH, ACCORDING TO THE PLAT OF RECORD IN THE OFFICE OF THE COUNTY RECORDER OF PINAL COUNTY, ARIZONA, IN POCKET #1, FOLDER #3, FILE #16. **PARCEL #3:** THE WEST SIXTY (60) FEET OF LOTS ONE (1), THREE (3), FIVE (5), SEVEN (7), NINE (9), ELEVEN (11) AND THIRTEEN (13), BLOCK ONE HUNDRED (100), TOWNSITE OF RANDOLPH, ACCORDING TO THE PLAT OF RECORD IN THE OFFICE OF THE COUNTY RECORDER OF PINAL COUNTY, ARIZONA IN POCKET #1, FOLDER # 3, FILE # 16.

REGISTERED LAND SURVEYOR
CERTIFICATE NO.
49218
CHRISTOPHER
WILK
DATE SIGNED 2-20-24
ARIZONA U.S.A.

Exp. 3/31/2024

Abandonment Location

Sec.10-T06S-R08E

Right-of-Way Classification

- Abandoned
- Private
- Public

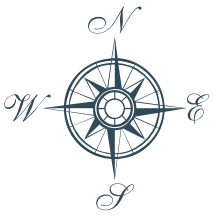

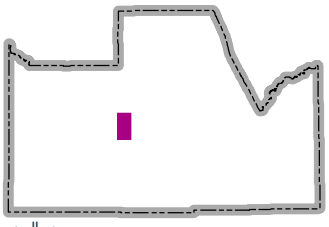

PINAL COUNTY
WIDE OPEN OPPORTUNITY

Affected Parcels

- PROPOSED ABANDONED PORTION

PINAL COUNTY
WIDE OPEN OPPORTUNITY

AGENDA ITEM

March 6, 2024 ADMINISTRATION BUILDING A
FLORENCE, ARIZONA

REQUESTED BY:

Funds #:

Dept. #:

Dept. Name: County Attorney

Director: Kent Volkmer

BRIEF DESCRIPTION OF AGENDA ITEM AND REQUESTED BOARD ACTION:

Discussion/approval/disapproval of the Agreement between the City of Coolidge and the Pinal County Attorney's Office for use of the City of Coolidge's Gun Firing Range. (Kent Volkmer)

BRIEF DESCRIPTION OF THE FISCAL CONSIDERATIONS AND/OR EXPECTED FISCAL IMPACT OF THIS AGENDA ITEM:

There is no fiscal impact to the County.

BRIEF DESCRIPTION OF THE EXPECTED PERFORMANCE IMPACT OF THIS AGENDA ITEM:

The approval of the agreement will allow the Pinal County Attorney's Office employees to maintain Peace Officer certification with the Arizona Peace Officer Standards and Training (POST) Board by allowing individuals to practice and complete firearms qualification as required.

MOTION:

Approve as presented.

History

Time	Who	Approval
2/15/2024 3:56 PM	County Attorney	Yes
2/16/2024 8:34 AM	Grants/Hearings	Yes
2/22/2024 7:40 AM	Budget Office	Yes
2/28/2024 11:32 AM	County Manager	Yes
2/28/2024 12:26 PM	Clerk of the Board	Yes

ATTACHMENTS:

Click to download

BOS Memorandum

OFFICE OF THE PINAL COUNTY ATTORNEY
Kent Volkmer • Pinal County Attorney

TO: PINAL COUNTY BOARD OF SUPERVISORS

FROM: KENT VOLKMER, PINAL COUNTY ATTORNEY'S OFFICE

SUBJECT: PINAL COUNTY ATTORNEY'S OFFICE USE OF COOLIDGE FIRING RANGE

DATE: FEBRUARY 14, 2024

The Pinal County Attorney respectfully requests the Board of Supervisors approve an agreement between the City of Coolidge and the Pinal County Attorney's Office for use of the City of Coolidge's Gun Firing Range.

There will be no fiscal impact to the County, however, the agreement requires the Board of Supervisor's acknowledgement and approval.

By approving this request, the Pinal County Attorney's Office employees will have access to a proper firing range to be able to maintain Peace Officer certification with the Arizona Peace Officer Standards and Training (POST) Board. This will allow individuals to practice with their service weapons and complete firearms qualifications as required.

P.O. BOX 887, Florence, AZ 85132 | O (520) 866-6271 | F (520) 866-6543

CITY OF COOLIDGE- AIRPORT/ANTHEM

AGENCY WAIVER OF LIABILITY AND HOLD HARMLESS AGREEMENT

1. In consideration for receiving permission to use the City of Coolidge's Gun Firing Range ("facility"), _the Pinal County Attorney's Office__, for which the undersigned hereby represents that he/she has the express authority to act on behalf of, hereby releases, waives, discharges and covenants not to sue the City of Coolidge, its officers, agents, and employees (hereinafter referred to as "releasees") from any and all liability, claims, demands, actions, and causes of action whatsoever arising out of or relating to any loss, damage or injury, including death, that may be sustained by the _Pinal County Attorney's Office__, its invitees, agents or assigns, or to any property upon the premises where the range activity is being conducted, while in transit to or from the premises, or in all legal responsibility and liability for any injuries, damages or other losses suffered by any individual participating in any activity whatsoever upon the facility at the invitation, request or demand of the _Pinal County Attorney's Office__, subject to the provisions of Section 3 below.
2. The _Pinal County Attorney's Office__ is fully aware of risks and hazards connected with being on the premises and participating in the use of the facility and is fully aware that there may be risks and hazards unknown to the _Pinal County Attorney's Office__ connected with being on the premises and participating in the use of the facility, and hereby elects to voluntarily use the facility, to enter upon the above named premises and engage in activities knowing that conditions may be hazardous, or may become hazardous or dangerous to the _Pinal County Attorney's Office__ and its property.
3. Each party (as "Indemnitor") agrees to defend, indemnify, and hold harmless the other party (as Indemnitee") from any against any and all claims, losses, liability, costs or expenses (including reasonable attorney's fees)(hereinafter collectively referred to as "Claims") arising out of bodily injury or any person (including death) or property damage, but only to the extent that such Claims which result in vicarious/derivative liability to the Indemnitee are caused by the act, omission, negligence, misconduct or other fault of the Indemnitor, its officer, officials, agents, employees, or volunteers. If a claim or claims by third parties become subject to this indemnity provision, the parties to this Agreement shall expeditiously meet to discuss a common and mutual defense, including possible proportionate liability and payment of possible litigation expenses and damages. The obligations under this section shall survive termination of this Agreement.
4. **This Agreement shall be in effect from January 1, 2024 through December 31, 2025.**

In signing this release, the _Pinal County Attorney's Office__ acknowledges and represents that:

A. The undersigned has read the foregoing release, understands it, and signs it voluntarily on behalf of the releasing agency;

B. The undersigned executes this release for full, adequate and complete consideration fully intending to be bound by same.

In witness whereof, I have hereunto set my hand and seal this_____ day of _____, _____

Name of Agency: Pinal County Attorney's Office

Pinal County Board of Supervisor's Acknowledgment and Approval:

By:_____ Date:_____

Chairman

Pinal County Attorney Acknowledgment and Approval:

By:_____ Date:_____

County Attorney

DEPARTMENT REQUESTING USE

Date(s) of use: _____ Contact Person: _____

Time of use: Start._____ End _____

Phone #: _____ Approximate Number of Officers/Users:_____

Authorization by Coolidge Police Department

Approved as submitted [ ] Yes [ ] No Signature: _____

Comments: Present approval form to pick up keys, return keys each day, and please clean up after each use. Approval is subject to confirmation on or just prior to the day of your reservation. Please pick up and return the range key each day after use. Please remember to clean up what you can. We really need your help in that area. Be safe. Thank you, Coolidge PD.

PINAL COUNTY
WIDE OPEN OPPORTUNITY

AGENDA ITEM

March 6, 2024 ADMINISTRATION BUILDING A
FLORENCE, ARIZONA

REQUESTED BY:

Funds #:

Dept. #:

Dept. Name: County Attorney

Director: Kent Volkmer

BRIEF DESCRIPTION OF AGENDA ITEM AND REQUESTED BOARD ACTION:

Discussion/approval/disapproval of an application for payment of $4,998 to Cutters Document Destruction, LLC from the Pinal County Attorney's Office anti-racketeering fund account to assist with the expense of providing onsite document shredding opportunities for the residents of Pinal County. (Kent Volkmer)

BRIEF DESCRIPTION OF THE FISCAL CONSIDERATIONS AND/OR EXPECTED FISCAL IMPACT OF THIS AGENDA ITEM:

There will be no fiscal impact to the general fund as there is sufficient funding within the Pinal County Attorney's Office anti-racketeering fund.

BRIEF DESCRIPTION OF THE EXPECTED PERFORMANCE IMPACT OF THIS AGENDA ITEM:

The Pinal County Attorney's Office has a goal of keeping the identities of all Pinal County residents safe and will be hosting seven document-shredding events in 2024 to assist in this endeavor.

MOTION:

Approve as presented.

History

Time	Who	Approval
2/23/2024 5:06 PM	County Attorney	Yes
2/27/2024 7:43 AM	Budget Office	Yes
2/27/2024 1:55 PM	County Manager	Yes
2/28/2024 9:04 AM	Clerk of the Board	Yes

ATTACHMENTS:

Click to download

- BOS Memorandum
- PCAO Application

Backup Documentation

OFFICE OF THE PINAL COUNTY ATTORNEY
Kent Volkmer • Pinal County Attorney

TO: PINAL COUNTY BOARD OF SUPERVISORS

FROM: KENT VOLKMER, PINAL COUNTY ATTORNEY'S OFFICE

SUBJECT: PINAL COUNTY ATTORNEY'S OFFICE REQUEST FOR USE OF RICO FUNDS

DATE: FEBRUARY 23, 2023

The Pinal County Attorney respectfully requests the Board of Supervisors approve an application for payment of $4,998.00 to Cutters Document Destruction, LLC from the Pinal County Attorney's Office anti-racketeering revolving fund account to assist with the expense of providing onsite document shredding opportunities for the residents of Pinal County.

In accordance with statutory changes made to A.R.S. 13-2314.03 (County anti-racketeering revolving fund; use of fund), when the County Attorney desires to use monies from the anti-racketeering fund for purposes related to the county attorney's office, the statute requires an application that includes a description of what the requested monies will be used for be submitted to the Board of Supervisors. In turn, the Board of Supervisors shall approve the County Attorney's use of the monies if the purpose is authorized by statute or federal law.

Pursuant to the U.S Department of Justice Guide to Equitable Sharing for State and Local Law Enforcement Agencies, permissible uses of forfeited assets include "(d) Costs associated with the purchase, lease, maintenance…of equipment. (f) Costs associated with a contract for a specific service that supports or enhances law enforcement is permitted.

Identity theft comes in many different forms, including but not limited to, theft of child identity, financial identity, credit card fraud or data breaches. The Pinal County Attorney's Office has a goal of keeping the identities of all Pinal County residents safe and will be hosting seven document-shredding events in 2024 to assist in this endeavor.

P.O. BOX 887, Florence, AZ 85132 | Office (520) 866-6271

PINAL COUNTY ATTORNEY'S OFFICE
Agency Application for RICO Funds

Agency Name: **Pinal County Attorney's Office**

A. Intended use of funds (Check all applicabale boxes)

	ACJC Title	Amount		ACJC Title	Amount
☐	Grant Match		☐	Training & Conferences	
☑	Community Support		☐	Vehicles	
☐	Witness Protection		☐	Vehicle Maintenance	
☐	Investigation Costs		☐	Canines, Firearms & Related Equip	
☐	Personnel Services		☐	Other Capital	
☐	Professional/Outside Svc.		☐	External Publications	
☐	Travel & Meals		☐	Other Operating Expense	

B. Funding Source ☑ State ☐ Federal

C. Agencies must submit supporting documentation with the Application for RICO Funds. Check all the supporting documents that apply:

- ☐ A supplemental memorandum is attached and contains an explanation for each category.
- ☐ An itemized list of reimbursements or advances with an explanation for each category.
- ☐ A letter of request for funding from a community based program is attached that sets forth the program goals and contains the information necessary to comply with applicable statutes.
- ☐ A detailed invoice or quote has been provided for all services, material, items, equipment of other property purchased or to be purchased.

D. Payment Information

Total Request:	$4,998.00
Payee:	Cutters Document Shredding
Hold for/Deliver to:	
Address:	441 S. 31st St. - Mesa Az 85204

The undersigned, an agent appointed to request a transfer of funds from the agency's RICO account, certifies that: (1) the above information is true and accurate; (2) all funds transferred pursuant to this request will be used for those purposes stated in A.R.S. §§ 13-2314.03(E) and 13-4315(C); (3) all funds transferred pursuant to this request will be deposited, accounted for, and expended consistent with standard accounting requirements and practices employed under state or local law for recipients of federal, state, or local funds. (4) the services, materials, items, equipment of other property purchased or to be purchased by this agency, using funds from account or subaccount of the Pinal County Attorney's Anti-Racketeering Fund have been procured under the applicable state statutes and ordinances or policies of the local government making the request for the purchase or expenditure of funds. The undersigned agrees that the agency will report and/or provide additional supporting documentation on the actual use of these transferred funds upon request from the Pinal County Attorney's Office. (5) The undersigned affirms that he/she has complied with A.R.S. §§ 38-501 et seq. regarding any potential or actual conflict(s) of interest. If the undersigned is a Pinal County employee, the undersigned further affirms that he/she has complied with Pinal C[illegible] Procedure 3.35.

Signature

Kent Volkmer, County Attorney

(Typed/Print Name of Agency Representative)

APPROVED 10/24

Date

Kent Volkmer
Pinal County Attorney's Office

For Board of Supervisor's Use Only

Based upon a review of the above agent's certified request for a transfer of funds from the agency's RICO account, the requested transfer is approved for use in accordance with A.R.S. §§ 13-2314.03(E), 13-4315 (C), and federal law.

Board of Supervisor's Approval

Date

Cutters Document Destruction, LLC
441 S 31st St
Mesa, AZ 85204
+1 4802647454
info@cuttersonsite.com

INVOICE

BILL TO
Pinal County Attorney's Office

INVOICE # 71468
DATE 01/03/2024
DUE DATE 03/30/2024
TERMS Net 30

P.O. NUMBER
Latisha

JOBSITE
Superior

DATE	DESCRIPTION	QTY	RATE	AMOUNT
	We require 10% down to hold shred event dates.			
04/06/2024	On-site document shredding to meet code regulation and identity theft laws. Shred Event 04/06/24 10AM-1PM. 2525 N. Pinal Ave. Casa Grande	2	357.00	714.00
04/20/2024	On-site document shredding to meet code regulation and identity theft laws. 04/20/24 9AM-11AM. 44345 M.L.K. Jr. Blvd. Maricopa, AZ	2	357.00	714.00
05/04/2024	On-site document shredding to meet code regulation and identity theft laws. 05/04/24 9AM-11AM. 3281 N. Hunt Hwy. #111, Florence, AZ	2	357.00	714.00
06/15/2024	On-site document shredding to meet code regulation and identity theft laws. 06/15/24 8AM-10AM 1725 W. Hunt Hwy.	2	357.00	714.00
09/15/2024	On-site document shredding to meet code regulation and identity theft laws. 09/15/24 9-11AM 685 E. American Ave. Oracle	2	357.00	714.00
10/12/2024	On-site document shredding to meet code regulation and identity theft laws. 10/12/24 9AM-11AM. 3015 N. Idaho Rd. Apache Junction	2	357.00	714.00
10/18/2024	On-site document shredding to meet code regulation and identity theft laws. 10/18/24 9AM-11AM. 360 W. Main St.	2	357.00	714.00

*********Certificate of Destruction*********

BALANCE DUE **$4,998.00**

On the date of this invoice, designated files and confidential data were shredded and destroyed onsite per customers request and in accordance with code requirements and code regulations.

****HIPAA***FACTA***SEC***

Witnessed By: Office Management

PINAL COUNTY
WIDE OPEN OPPORTUNITY

AGENDA ITEM

March 6, 2024 ADMINISTRATION BUILDING A
FLORENCE, ARIZONA

REQUESTED BY:

Funds #: N/A

Dept. #: N/A

Dept. Name: Elections

Director:

BRIEF DESCRIPTION OF AGENDA ITEM AND REQUESTED BOARD ACTION:

Discussion/approval/disapproval of the following appointments and resignations for the precinct committeemen of the Democratic and Republican parties:

Republican Appointments:

Supervisor District #5:

Precinct #59 Elizabeth M. Fitzgerald 2206 E. 37th Ave., Apache Junction 85119

Republican Resignations:

Supervisor District #3:

Precinct #13 Michael B. Miller 5703 N. Dakota Dr., Eloy 85131

Supervisor District #4:

Precinct #109 James Bencina Jr., 7701 W. Willow Way, Florence 85132

Democratic Resignations:

Supervisor District #4:
Precinct #26 Julia Anderson 630 W. Sundance Cir., San Tan Valley 85143 (Dana Lewis)

BRIEF DESCRIPTION OF THE FISCAL CONSIDERATIONS AND/OR EXPECTED FISCAL IMPACT OF THIS AGENDA ITEM:

None.

BRIEF DESCRIPTION OF THE EXPECTED PERFORMANCE IMPACT OF THIS AGENDA ITEM:

None.

MOTION:

Approve as presented.

History

Time	Who	Approval
2/23/2024 2:32 PM	County Attorney	Yes
2/23/2024 2:41 PM	Grants/Hearings	Yes
2/23/2024 2:43 PM	Budget Office	Yes
2/27/2024 4:51 PM	County Manager	Yes
2/28/2024 9:04 AM	Clerk of the Board	Yes

ATTACHMENTS:

Click to download

Precinct Committeemen Appointments & Resignations 3.6.2024

PINAL ♦ COUNTY
Wide open opportunity

Precinct Committeemen
Appointments & Resignations
March 6th, 2024

Republican Appointments					
Precinct #	**First Name**	**Last Name**	**Address**	**City**	**Zip Code**
Supervisor District #5					
Precinct #59	Elizabeth M	Fitzgerald	2206 E. 37th Ave	Apache Junction	85119

Republican Resignations					
Precinct #	**First Name**	**Last Name**	**Address**	**City**	**Zip Code**
Supervisor District #3					
Precinct #13	Michael B	Miller	5703 N Dakota Dr	Eloy	85131
Supervisor District #4					
Precinct #109	James	Bencina Jr.	7701 W Willow Way	Florence	85132

PINAL ♦ COUNTY
Wide open opportunity

Precinct Committeemen
Appointments & Resignations

Democratic Resignations					
Precinct #	**First Name**	**Last Name**	**Address**	**City**	**Zip Code**
Supervisor #4:					
Precinct #26	Julia	Anderson	630 W Sundance Cir.	San Tan Valley	85143

PINAL COUNTY
WIDE OPEN OPPORTUNITY

AGENDA ITEM

March 6, 2024 ADMINISTRATION BUILDING A
FLORENCE, ARIZONA

REQUESTED BY:

Funds #:

Dept. #:

Dept. Name: Development Services-Public Works

Director: Joe Ortiz

BRIEF DESCRIPTION OF AGENDA ITEM AND REQUESTED BOARD ACTION:

Discussion/approval/disapproval of Resolution No. 030624-RD23-126 of the Board of Supervisors authorizing the County Engineer to sign an application with the Arizona State Land Department for the acquisition of right of way associated with Judd Road and Bella Vista Road. Supervisor District #5. (RD23-126) (Christopher Wanamaker/Joe Ortiz)

BRIEF DESCRIPTION OF THE FISCAL CONSIDERATIONS AND/OR EXPECTED FISCAL IMPACT OF THIS AGENDA ITEM:

There aren't any expected fiscal considerations or impacts to the General Fund associated with this agenda item.

BRIEF DESCRIPTION OF THE EXPECTED PERFORMANCE IMPACT OF THIS AGENDA ITEM:

There are no expected performance impacts associated with this agenda item.

MOTION:

Approve as presented.

History

Time	Who	Approval

ATTACHMENTS:

Click to download
Resolution

When recorded, return
to: Clerk of the Board
P.O. Box 827
Florence AZ 85132

RESOLUTION NO. _____

A RESOLUTION OF THE PINAL COUNTY, ARIZONA, BOARD OF SUPERVISORS AUTHORIZING THE COUNTY ENGINEER TO SIGN AN APPLICATION WITH THE ARIZONA STATE LAND DEPARTMENT FOR THE ACQUISITION OF RIGHT OF WAY ASSOCIATED WITH JUDD ROAD AND BELLA VISTA ROAD

WHEREAS, this matter has been brought before the Pinal County Board of Supervisors by a request by Boca bn, LLC, a Delaware limited liability company (known herein after as "Developer") and approved by the County Engineer; and,

WHEREAS, the acquisition of right of way for the future Judd Road and Bella Vista Road (known herein after as "ROW") across land owned by the Arizona State Land Department is a condition of approval of Ordinance No. 2022-PZ-PD-003-22, approved by the Pinal County Board of Supervisors on May 18th, 2022; and,

WHEREAS, the Developer has submitted an application to the Arizona State Land Department for the ROW and agrees to pay all costs and perform all necessary work to effectuate the acquisition of the ROW, pursuant to the policies and procedures of the Arizona State Land Department,; and,

WHEREAS, the transfer of the application submitted by Developer to the County will allow the ROW to granted without auction and issued directly to the County.

NOW, THEREFORE, BE IT RESOLVED by the Pinal County Board of Supervisors that the County Engineer, or his/her designee, is hereby authorized to sign an application with the Arizona State Land Department to transfer the application of the Developer for the acquisition of the ROW to the County; and,

BE IT FURTHER RESOLVED, that the Developer shall pay all fees and costs associated with the application and grant of the ROW, and the County Engineer is authorized to seek reimbursement for the expenditure of time and resources associated with signing, filing, and processing the application for ROW with the Arizona State Land Department; and,

BE IT FURTHER RESOLVED, that this Resolution shall become effective upon recording of said Resolution with the Office of the County Recorder, Pinal County, Arizona.

PASSED AND ADOPTED this _____ day of _____, 2024, by the PINAL COUNTY BOARD OF SUPERVISORS.

_____
Chair of the Board

ATTEST:

_____
Clerk/Deputy Clerk of the Board

APPROVED AS TO FORM
AND SUBSTANCE:

_____
Deputy County Attorney

PINAL COUNTY
WIDE OPEN OPPORTUNITY

AGENDA ITEM

March 6, 2024 ADMINISTRATION BUILDING A
FLORENCE, ARIZONA

REQUESTED BY:

Funds #:

Dept. #:

Dept. Name: Library District

Director: Shawn Flecken

BRIEF DESCRIPTION OF AGENDA ITEM AND REQUESTED BOARD ACTION:

Meeting of the Pinal County Library District Board of Directors. (Shawn Flecken/Cathryn Whalen)

BRIEF DESCRIPTION OF THE FISCAL CONSIDERATIONS AND/OR EXPECTED FISCAL IMPACT OF THIS AGENDA ITEM:

BRIEF DESCRIPTION OF THE EXPECTED PERFORMANCE IMPACT OF THIS AGENDA ITEM:

MOTION:

History

Time	Who	Approval

ATTACHMENTS:

Click to download
Agenda Packet

PINAL COUNTY
WIDE OPEN OPPORTUNITY

NOTICE OF PUBLIC MEETING AND EXECUTIVE SESSION
PINAL COUNTY LIBRARY DISTRICT
BOARD OF DIRECTORS
AGENDA
Wednesday, March 6, 2024

9:30 AM - CALL TO ORDER

PINAL COUNTY ADMINISTRATIVE COMPLEX
BOARD OF SUPERVISORS HEARING ROOM
135 N. PINAL STREET
FLORENCE, AZ 85132

BUSINESS BEFORE THE BOARD
(Consideration/Approval/Disapproval of the following:)

(1) **CONSENT ITEMS:**

All items indicated by an asterisk (*) will be handled by a single vote as part of the consent agenda, unless a Board Member, County Manager, or member of the public objects at the time the agenda item is called.

* A. Discussion/approval/disapproval of Minutes from the December 20, 2023, Board of Directors Library District Meeting. (Natasha Kennedy)

* B. Discussion/approval/disapproval of an amendment to correct the previously approved AZ Librarians Enhancing Resilient Rural Communities grant on September 6, 2023. The grant was approved in Fund 75 but should have been allocated to Fund 76. Approval will require an amendment to the FY 23/24 budget to transfer appropriation from Fund 75 (Library/District) to the correct fund, Fund 76 (Library/State), to increase revenue and expenditure appropriations in the amount of $4,000. (Shawn Flecken/Cathryn Whalen)

ADJOURNMENT

(SUPPORTING DOCUMENTS ARE AVAILABLE AT THE CLERK OF THE BOARD OF SUPERVISORS' OFFICE AND AT https://pinal.novusagenda.com/AgendaPublic/)

NOTE: One or more members of the Board may participate in this meeting by telephonic conference call.

The Board may go into Executive Session for the purpose of obtaining legal advice from the County's Attorney(s) on any of the above agenda items pursuant to A.R.S. 38-431.03(A)(3).

In accordance with the requirement of Title II of the Americans with Disabilities Act (ADA), the Pinal County Board of Supervisors and Pinal County Board of Directors do not discriminate against qualified individuals with disabilities admission to public meetings. If you need accommodation for a meeting, please contact the Clerk of the Board Office at (520) 866-6068, at least (3) three business days prior to the meeting (not including weekends or holidays) so that your request may be accommodated.

Pursuant to A.R.S. 38-431.02, NOTICE IS HEREBY GIVEN, that the public will have physical access to the meeting room at 9:15 AM.

Meeting Notice of Posting

PINAL COUNTY
WIDE OPEN OPPORTUNITY

AGENDA ITEM

March 6, 2024 ADMINISTRATION BUILDING A
FLORENCE, ARIZONA

REQUESTED BY:

Funds #:

Dept. #:

Dept. Name: Clerk of the Board

Director: Natasha Kennedy

BRIEF DESCRIPTION OF AGENDA ITEM AND REQUESTED BOARD ACTION:

Discussion/approval/disapproval of Minutes from the December 20, 2023, Board of Directors Library District Meeting. (Natasha Kennedy)

BRIEF DESCRIPTION OF THE FISCAL CONSIDERATIONS AND/OR EXPECTED FISCAL IMPACT OF THIS AGENDA ITEM:

BRIEF DESCRIPTION OF THE EXPECTED PERFORMANCE IMPACT OF THIS AGENDA ITEM:

MOTION:

Approve as presented.

History

Time	Who	Approval

ATTACHMENTS:

Click to download

Minutes LD

PINAL COUNTY
WIDE OPEN OPPORTUNITY

PINAL COUNTY LIBRARY DISTRICT
BOARD OF DIRECTORS
MINUTES
Wednesday, December 20, 2023
1:00 PM

BOARD OF DIRECTORS

Chairman Jeff Serdy
Director, District 5

Vice-Chairman Jeffrey McClure
Director, District 4

Kevin Cavanaugh
Director, District 1

Mike Goodman
Director, District 2

Stephen Q. Miller
Director, District 3

PINAL COUNTY ADMINISTRATIVE COMPLEX
BOARD OF SUPERVISORS HEARING ROOM
135 N. PINAL STREET
FLORENCE, AZ 85132

All Presentations are attached to the Agenda at:
Click Here to View the Library District Agenda

and a Video Recording of this meeting can be viewed at:
Click Here to View Video Recording

The Pinal County Library District Board of Directors convened at 1:00 p.m. this date. The meeting was called to order by Chairman Serdy.

Members Present: Chairman Jeff Serdy; Director Kevin Cavanaugh; Director Mike Goodman; Director Stephen Q. Miller

Members Absent: Vice-Chairman Jeffrey McClure

Staff Present: Chief Civil Deputy County Attorney, Chris Keller; Clerk of the Board, Natasha Kennedy and Deputy Clerk of the Board, Kelsey Pickard

(1) **CONSENT ITEMS:**

All items indicated by an asterisk (*) will be handled by a single vote as part of the consent agenda, unless a Board Member, County Manager, or member of the public objects at the time the agenda item is called.

Chairman Serdy asked if there were any requests from a Board Member, staff or the audience to remove any consent agenda items for discussion. There being none.

Item Action: Approved Consent Agenda Items A and B on the Pinal County Library District

Motion Made By: Supervisor Goodman Seconded By: Supervisor Miller

To approve Consent Agenda Items A and B on the Pinal County Library District.

Motion Passed

Ayes: Cavanaugh, Goodman, Miller, Serdy (4)

Absent: McClure (1)

* A. Discussion/approval/disapproval of Minutes from the October 18, 2023, Board of Directors Library District Meeting. (Natasha Kennedy)

* B. Discussion/approval/disapproval of Resolution No. 122023-EconD-LD by the Pinal County Library District Board of Directors expressing support for a Foreign Trade Zone designation for LG Energy Solutions Arizona, Inc. in Queen Creek, Pinal County. The project represents the development of a site of approximately 650.5 acres, formerly owned by Arizona State Trust Land, construction of up to three million square feet of industrial space, capital investment of $5.5 billion and the hiring of up to 3,700 employees at full build out. The Pinal County Library District Board of Directors previously approved a similar resolution on March 16, 2022. However, due to a name change to a successor company, a delay in the commencement of construction and the expanded scope of the project, there is a need for the Library Board to restate its support for the project. (James Smith)

1:01 p.m. – Chairman Serdy adjourned the December 20, 2023, Pinal County Library District Board of Directors Meeting and convened the Pinal County Public Health Services District Board of Directors Meeting.

PINAL COUNTY
LIBRARY DISTRICT
BOARD OF DIRECTORS

_____
Jeff Serdy, Chairman

ATTEST:

_____
Natasha Kennedy, Clerk of the Board

Minutes Prepared By: Kelsey Pickard, Deputy Clerk of the Board

Approval of Minutes: March 6, 2024

PINAL COUNTY
WIDE OPEN OPPORTUNITY

AGENDA ITEM

March 6, 2024 ADMINISTRATION BUILDING A
FLORENCE, ARIZONA

REQUESTED BY:

Funds #: 76

Dept. #: 357

Dept. Name: Library District

Director: Shawn Flecken, Interim

BRIEF DESCRIPTION OF AGENDA ITEM AND REQUESTED BOARD ACTION:

Discussion/approval/disapproval of an amendment to correct the previously approved AZ Librarians Enhancing Resilient Rural Communities grant on September 6, 2023. The grant was approved in Fund 75 but should have been allocated to Fund 76. Approval will require an amendment to the FY 23/24 budget to transfer appropriation from Fund 75 (Library/District) to the correct fund, Fund 76 (Library/State), to increase revenue and expenditure appropriations in the amount of $4,000. (Shawn Flecken/Cathryn Whalen)

BRIEF DESCRIPTION OF THE FISCAL CONSIDERATIONS AND/OR EXPECTED FISCAL IMPACT OF THIS AGENDA ITEM:

Approval will require an amendment to the FY 23/24 budget to transfer appropriation from Fund 75 (Library/District) to the correct fund, Fund 76 (Library/State), to increase revenue and expenditure appropriations in the amount of $4,000.

BRIEF DESCRIPTION OF THE EXPECTED PERFORMANCE IMPACT OF THIS AGENDA ITEM:

Reallocating the grant from Fund 75 to Fund 76 will correct a bookkeeping mistake. There should be no impact on performance, as the grant funds have already been expended and the program is already underway.

MOTION:

Approve as presented.

History

Time	Who	Approval
2/23/2024 9:10 AM	County Attorney	Yes
2/23/2024 9:47 AM	Grants/Hearings	Yes
2/23/2024 2:53 PM	Budget Office	Yes
2/28/2024 12:04 PM	County Manager	Yes
2/28/2024 3:07 PM	Clerk of the Board	Yes

ATTACHMENTS:

Click to download
Cover Memo
Budget amendment for transfer from fund 75 to fund 76
Board Action Summary for September 6, 2023

Leo Lew
County Manager

PINAL • COUNTY
wide open opportunity

February 22, 2024

Pinal County Library District Board of Directors

Re: AZ Librarians Enhancing Resilient Rural Communities grant

Dear Sirs:
On August 2, 2023 the Board gave its approval for the Library District to submit an application for a mini grant program between the Arizona Center for Rural Health and the Pinal County Library District, through the Library District Board, beginning September 1, 2023, ending April 30, 2024.

On September 6, 2023, the Board approved acceptance of grant funds in the amount of $4,000, requiring an amendment to the FY 23/24 budget to transfer reserve appropriation from Fund 213 (Grants/Project Contingency) to Fund 75 (Library/District) to increase revenue and expenditure appropriations. The County Finance Department has since determined that the grant should have been allocated to Fund 76 (Library/State).

We are seeking approval of a budget amendment to transfer the grant appropriation from Fund 75 to Fund 76.

Sincerely,

Shawn M. Flecken, Interim Director
Pinal County Library District

PINAL COUNTY LIBRARY DISTRICT

92 West Butte Avenue, Post Office Box 2974 Florence, AZ 85132 **T** 520-866-6457 **F** 520-866-6533
www.pinalcountyaz.gov/Library

DEPARTMENT/FUND
APPROPRIATION ADJUSTMENT FORM

Fiscal Year	Agenda Item needed (yes/no)	Anticipated Meeting Date if applicable	Memo Attached if Board item
23/24	Yes	2/21/2024	☐

Please use one form per agenda item.

Sources (Fund Balance, Revenues, Transfers In, etc...)							
Fund	**Input "yes" if change in Fund Balance (2511)**	**Cost Center**	**Sub Ledger**	**Object Code**	**Current Budget**	**Adjustment Add/ (Subtract)**	**New Revised Budget**
76		3570237		421000	$0	$4,000	$4,000
75		3570237		421000	$4,000	($4,000)	$0
Insert rows above this line and copy New Revised Budget formula down							
						Net Source Adjustment	$0

Uses (Expenditures, Transfers Out, etc....)							
Fund		**Cost Center**	**Sub Ledger**	**Object Code**	**Current Budget**	**Adjustment Add/ (Subtract)**	**New Revised Budget**
75		3570237		531990	$4,000	($4,000)	$0
76		3570237		531990	$0	$4,000	$4,000
Insert rows above this line and copy New Revised Budget formula down							
						Net Use Adjustment	$0

Net Change	$0

Prepared by:	Shawn Flecken/Angelica Armenta	Date:	1/3/2024

Explanation:	Fund correction; On September 6, 2023 grant was approved in Fund 75 (Library/District). The grant should be in Fund 76 (Library/State). This grant will promote Health & Well-Being through Meditation and Hydroponics. Teens/tweens will investigate plants in depth through Science, Technology, Art, and Math. As well as explore the art of Mindfulness through Meditation.

TYPE OF REQUEST:

- ☐ **Transfer within same Cost Center**
- ☐ **Transfer between Cost Centers within same Fund**
- ☐ **Transfer between Funds or Transfer In/Out adjustments**
- ☑ **Transfer from/to of Reserve/Contingency (e.g., new grant, change in special revenue projection, new projec**
- ☐ **Change in Fund Balance Appropriation**

For Budget Office Use Only

BUDGET OFFICE APPROVAL	COUNTY MANAGER APPROVAL	POSTED
BY:_____	BY:_____	BY:_____
DATE: _____	DATE: _____	DATE:_____

PINAL COUNTY
WIDE OPEN OPPORTUNITY

PINAL COUNTY LIBRARY DISTRICT
BOARD OF DIRECTORS
ACTION SUMMARY
Wednesday, September 6, 2023
11:10 AM

BOARD OF DIRECTORS

Chairman Jeff Serdy
Director, District 5

Vice-Chairman Jeffrey McClure
Director, District 4

Kevin Cavanaugh
Director, District 1

Mike Goodman
Director, District 2

Stephen Q. Miller
Director, District 3

PINAL COUNTY ADMINISTRATIVE COMPLEX
BOARD OF SUPERVISORS HEARING ROOM
135 N. PINAL STREET
FLORENCE, AZ 85132

All Presentations are attached to the Agenda at:
Click Here to View the Library District Agenda

and a Video Recording of this meeting can be viewed at:
Click Here to View Video Recording

The Pinal County Library District Board of Directors convened at 11:10 a.m. this date. The meeting was called to order by Chairman Serdy.

Members Present: Chairman Jeff Serdy; Vice-Chairman Jeffrey McClure; Director Kevin Cavanaugh; Director Mike Goodman; Director Stephen Q. Miller

Staff Present: County Manager, Leo Lew; Chief Civil Deputy County Attorney, Chris Keller; Clerk of the Board, Natasha Kennedy and Deputy Clerk of the Board, Kelsey Pickard

(1) **CONSENT ITEMS:**

All items indicated by an asterisk (*) will be handled by a single vote as part of the consent agenda, unless a Board Member, County Manager, or member of the public objects at the time the agenda item is called.

* A. Discussion/approval/disapproval of Minutes from the July 5, 2023, Board of Directors Library District Meeting. (Natasha Kennedy)

Item Action: Approved

* B. Discussion/approval/disapproval of an Award Agreement for $4,000 under the AZ Librarians Fostering Resilient Rural Communities AHEAD AZ mini grant program, between the Arizona Center for Rural Health and the Pinal County Library District, through the Pinal County Board of Supervisors, and delegating signature authority to accept this grant award to the Interim Director, Shawn Flecken of Pinal County Library District. The term of the grant will begin September 1, 2023, and end April 30, 2024, and the funds will be used by the Library District to create a "Health and Wellness through Meditation and Hydroponics" program to be presented by the District's Outreach Librarian. Acceptance requires an amendment to the FY 23/24 budget to transfer reserve appropriation from Fund 213 (Grants/Project Contingency) to Fund 75 (Library/District) to increase revenue and expenditure appropriations. There is no impact on the General Fund. (Shawn Flecken/Himanshu Patel)

Item Action: Approved

(2) Discussion/approval/disapproval of proposed Library District policy 20.14 regarding rules for the use of meeting rooms at county-run libraries. (Shawn Flecken/Himanshu Patel)

Item Action: Approved

PINAL COUNTY

WIDE OPEN OPPORTUNITY

AGENDA ITEM

March 6, 2024 ADMINISTRATION BUILDING A
FLORENCE, ARIZONA

REQUESTED BY:

Funds #:

Dept. #:

Dept. Name: Clerk of the Board

Director: Natasha Kennedy

BRIEF DESCRIPTION OF AGENDA ITEM AND REQUESTED BOARD ACTION:

Pursuant to A.R.S. 38-431.02, NOTICE IS HEREBY GIVEN, that the public will have physical access to the meeting room at 9:15 AM.

BRIEF DESCRIPTION OF THE FISCAL CONSIDERATIONS AND/OR EXPECTED FISCAL IMPACT OF THIS AGENDA ITEM:

BRIEF DESCRIPTION OF THE EXPECTED PERFORMANCE IMPACT OF THIS AGENDA ITEM:

MOTION:

History

Time	Who	Approval

ATTACHMENTS:

Click to download
No Attachments Available

PINAL COUNTY

WIDE OPEN OPPORTUNITY

AGENDA ITEM

March 6, 2024 ADMINISTRATION BUILDING A
FLORENCE, ARIZONA

REQUESTED BY:

Funds #:

Dept. #:

Dept. Name: Clerk of the Board

Director: Natasha Kennedy

BRIEF DESCRIPTION OF AGENDA ITEM AND REQUESTED BOARD ACTION:

Meeting Notice of Posting

BRIEF DESCRIPTION OF THE FISCAL CONSIDERATIONS AND/OR EXPECTED FISCAL IMPACT OF THIS AGENDA ITEM:

BRIEF DESCRIPTION OF THE EXPECTED PERFORMANCE IMPACT OF THIS AGENDA ITEM:

MOTION:

History

Time	Who	Approval

ATTACHMENTS:

Click to download
Notice of Posting

PINAL COUNTY

WIDE OPEN OPPORTUNITY

MEETING NOTICE OF POSTING

STATE OF ARIZONA

COUNTY OF PINAL

I, Natasha Kennedy, being duly sworn upon her oath, says as follows:

I am the appointed Clerk of the Pinal County Board of Supervisors.

In my position as Clerk of the Board of Supervisors and Board of Directors, I am responsible for posting all Agendas.

Pursuant to A.R.S. 38-431.02 notice is hereby given that the Pinal County Board of Supervisors and Pinal County Board of Directors will hold a Regular meeting on **Wednesday, March 6, 2024 at 9:30 AM** in the Board Hearing Room, 1891 Historic Courthouse, Administrative Complex, located at 135 N. Pinal Street, Florence, Arizona 85132. The public will have physical access to the meeting room at 9:15 AM.

Notice of Possible Recess: The Board may take a Recess around 12:30 PM and the meeting will reconvene around 1:00 PM.

Board Meetings are broadcasted live and the public may access the meeting on the County Website at Pinal.gov under "Meeting Videos."

Board Agendas are available on the County Website at Pinal.gov under "Agendas & Minutes."

At any time during business hours, citizens may reach the Clerk of the Board Office at (520) 866-6068 or via email at **ClerkoftheBoard@pinal.gov** for information about Board meeting participation.

Note: One or more members of the Board may participate in this meeting by telephonic conference call.

I hereby further certify that I caused to be posted this Friday, March 1, 2024, around 11:00 AM the Regular Agenda, Library District Agenda, Public Health Services District Agenda, and Executive Session as follows:

1. A kiosk located outside the front entrance to The Old Historical Courthouse, Administrative Complex Building, 135 North Pinal Street, Florence, Arizona 85132
2. County Website under Agendas & Meetings located at Pinal.gov
3. Emailed the NOVUS Agenda Distribution List and Clerk of the Board Notification Distribution List

IN WITNESS WHEREOF, I have hereunto set my hand and caused to be affixed the Official Pinal County, Arizona Seal this 1st day of March, 2024.

THE SEAL OF PINAL COUNTY ARIZONA 1875

Natasha Kennedy
Clerk of the Board of Supervisors
Pinal County, Arizona

CLERK OF THE BOARD OF SUPERVISORS
1891 Historic Courthouse | 135 North Pinal Street | P.O. Box 827 | Florence, AZ 85132 | **T:** 520-866-6068
www.pinal.gov

PINAL COUNTY
WIDE OPEN OPPORTUNITY

AGENDA ITEM

March 6, 2024 ADMINISTRATION BUILDING A
FLORENCE, ARIZONA

REQUESTED BY:

Funds #:

Dept. #:

Dept. Name: Public Health

Director: Merissa Mendoza

BRIEF DESCRIPTION OF AGENDA ITEM AND REQUESTED BOARD ACTION:

Meeting of the Pinal County Public Health Services District Board of Directors. (Merissa Mendoza/MaryEllen Sheppard)

BRIEF DESCRIPTION OF THE FISCAL CONSIDERATIONS AND/OR EXPECTED FISCAL IMPACT OF THIS AGENDA ITEM:

BRIEF DESCRIPTION OF THE EXPECTED PERFORMANCE IMPACT OF THIS AGENDA ITEM:

MOTION:

History

Time	Who	Approval

ATTACHMENTS:

Click to download

Agenda Packet

PINAL COUNTY
WIDE OPEN OPPORTUNITY

NOTICE OF PUBLIC MEETING AND EXECUTIVE SESSION
PINAL COUNTY PUBLIC HEALTH SERVICES DISTRICT
BOARD OF DIRECTORS
AGENDA
Wednesday, March 6, 2024

9:30 AM - CALL TO ORDER

PINAL COUNTY ADMINISTRATIVE COMPLEX
BOARD OF SUPERVISORS HEARING ROOM
135 N. PINAL STREET
FLORENCE, AZ 85132

BUSINESS BEFORE THE BOARD
(Consideration/Approval/Disapproval of the following:)

(1) **CONSENT ITEMS:**

All items indicated by an asterisk (*) will be handled by a single vote as part of the consent agenda, unless a Board Member, County Manager, or member of the public objects at the time the agenda item is called.

* A. Discussion/approval/disapproval of Minutes from February 7, 2024, Board of Directors Public Health Services District Meeting. (Natasha Kennedy)

* B. Discussion/approval/disapproval of the Intergovernmental Agreement Amendment #1 between Pinal County Public Health Services District and University of Arizona for Infectious Disease Case Investigation Services. This agreement will last for the duration of six months beginning from February 16, 2024, to August 16, 2024. (Kore Redden/Merissa Mendoza)

* C. Discussion/approval/disapproval of Award Agreement No. CTR068315 under the Sexually Transmitted Infection Investigations program between the Arizona Department of Health Services and Pinal County Health Services District, through the Pinal County Board of Supervisors, beginning January 1, 2024, ending December 31, 2028, for $83,150. This grant will be used by the Public Health Department for sexually transmitted illness control services. The funding is included in the current budget. (Zia Helgeson-Budrys/Merissa Mendoza)

ADJOURNMENT

(SUPPORTING DOCUMENTS ARE AVAILABLE AT THE CLERK OF THE BOARD OF SUPERVISORS' OFFICE AND AT https://pinal.novusagenda.com/AgendaPublic/)

NOTE: One or more members of the Board may participate in this meeting by telephonic conference call.

The Board may go into Executive Session for the purpose of obtaining legal advice from the County's Attorney(s) on any of the above agenda items pursuant to A.R.S. 38-431.03(A)(3).

In accordance with the requirement of Title II of the Americans with Disabilities Act (ADA), the Pinal County Board of Supervisors and Pinal County Board of Directors do not discriminate against qualified individuals with

disabilities admission to public meetings. If you need accommodation for a meeting, please contact the Clerk of the Board Office at (520) 866-6068, at least (3) three business days prior to the meeting (not including weekends or holidays) so that your request may be accommodated.

Pursuant to A.R.S. 38-431.02, NOTICE IS HEREBY GIVEN, that the public will have physical access to the meeting room at 9:15 AM.

Meeting Notice of Posting

PINAL COUNTY
WIDE OPEN OPPORTUNITY

AGENDA ITEM

March 6, 2024 ADMINISTRATION BUILDING A
FLORENCE, ARIZONA

REQUESTED BY:

Funds #:

Dept. #:

Dept. Name: Clerk of the Board

Director: Natasha Kennedy

BRIEF DESCRIPTION OF AGENDA ITEM AND REQUESTED BOARD ACTION:

Discussion/approval/disapproval of Minutes from February 7, 2024, Board of Directors Public Health Services District Meeting. (Natasha Kennedy)

BRIEF DESCRIPTION OF THE FISCAL CONSIDERATIONS AND/OR EXPECTED FISCAL IMPACT OF THIS AGENDA ITEM:

BRIEF DESCRIPTION OF THE EXPECTED PERFORMANCE IMPACT OF THIS AGENDA ITEM:

MOTION:

Approve as presented.

History

Time	Who	Approval

ATTACHMENTS:

Click to download

Minutes PHSD

PINAL COUNTY
WIDE OPEN OPPORTUNITY

PINAL COUNTY PUBLIC HEALTH SERVICES DISTRICT
BOARD OF DIRECTORS
MINUTES
Wednesday, February 7, 2024
12:11 PM

BOARD OF DIRECTORS

Chairman Mike Goodman
Director, District 2

Vice-Chairman Jeffrey McClure
Director, District 4

Kevin Cavanaugh
Director, District 1

Stephen Q. Miller
Director, District 3

Jeff Serdy
Director, District 5

PINAL COUNTY ADMINISTRATIVE COMPLEX
BOARD OF SUPERVISORS HEARING ROOM
135 N. PINAL STREET
FLORENCE, AZ 85132

All Presentations are attached to the Agenda at:
Click Here to View the Public Health Services District Agenda

and a Video Recording of this meeting can be viewed at:
Click Here to View Video Recording

The Pinal County Public Health Services District Board of Directors convened at 12:11 p.m. this date. The meeting was called to order by Chairman Goodman.

Members Present: Chairman Mike Goodman; Vice-Chairman Jeffrey McClure; Director Kevin Cavanaugh; Director Stephen Q. Miller; Director Jeff Serdy

Staff Present: County Manager, Leo Lew; Chief Civil Deputy County Attorney, Chris Keller; Clerk of the Board, Natasha Kennedy and Deputy Clerk of the Board, Kelsey Pickard

(1) **CONSENT ITEMS:**
All items indicated by an asterisk (*) will be handled by a single vote as part of the consent agenda, unless a Board Member, County Manager, or member of the public objects at the time the agenda item is called.

Chairman Goodman asked if there were any requests from a Board Member, staff or the audience to remove any consent agenda items for discussion. There being none.

Item Action: Approved Consent Agenda Items A through B of the Public Health Services District

Motion Made By: Supervisor McClure Seconded By: Supervisor Miller

To approve Consent Items A through B of the Public Health Services District.

Motion Passed

Ayes: Cavanaugh, Goodman, McClure, Miller, Serdy (5)

* A. Discussion/approval/disapproval of Minutes from December 20, 2023, and January 3, 2024, Board of Directors Public Health Services District Meetings. (Natasha Kennedy)

* B. Discussion/approval/disapproval of Amendment No. Two (2) to Intergovernmental Agreement Contract No. CTR060272 with Arizona Department of Health Services for Immunization Services. This amendment extends the existing Programs term through June 30, 2025, and adds the new Bridge Access Program for $450,127 through December 31, 2024. The Public Health Services District will use the Bridge Access Program grant for, but not limited, to the following: staffing, materials/supplies, equipment, and travel related to efforts to successfully vaccinate uninsured adults within the community. With the new program, the total Contract amount is not to exceed the amended amount of $4,221,762. Acceptance requires an amendment to the FY 23/24 budget to transfer appropriation between Fund 213 (Grants/Project Contingency) and Fund 82 (Health/Grants) to increase revenues and expenditures. There is no impact on the General Fund. (Carey Lennon/Merissa Mendoza)

12:12 p.m. – Chairman Goodman adjourned the February 7, 2024, Pinal County Public Health Services District Board of Directors Meeting and reconvened the Pinal County Board of Supervisors Meeting.

PINAL COUNTY
PUBLIC HEALTH SERVICES DISTRICT
BOARD OF DIRECTORS

_____
Mike Goodman, Chairman

ATTEST:

_____
Natasha Kennedy, Clerk of the Board

Minutes Prepared By: Kelsey Pickard, Deputy Clerk of the Board

Approval of Minutes: March 6, 2024

PINAL COUNTY
WIDE OPEN OPPORTUNITY

AGENDA ITEM

March 6, 2024 ADMINISTRATION BUILDING A
FLORENCE, ARIZONA

REQUESTED BY:

Funds #: 82

Dept. #: 359

Dept. Name: Public Health

Director: Merissa Mendoza

BRIEF DESCRIPTION OF AGENDA ITEM AND REQUESTED BOARD ACTION:

Discussion/approval/disapproval of the Intergovernmental Agreement Amendment #1 between Pinal County Public Health Services District and University of Arizona for Infectious Disease Case Investigation Services. This agreement will last for the duration of six months beginning from February 16, 2024, to August 16, 2024. (Kore Redden/Merissa Mendoza)

BRIEF DESCRIPTION OF THE FISCAL CONSIDERATIONS AND/OR EXPECTED FISCAL IMPACT OF THIS AGENDA ITEM:

Contractual costs will be covered by funding received through ADHS. There will be no impact to the general fund.

BRIEF DESCRIPTION OF THE EXPECTED PERFORMANCE IMPACT OF THIS AGENDA ITEM:

The University shall provide case investigation services, as needed, during surge events and outbreaks. Provide training and on boarding of staff with appropriate documentation and continuing education/training. Weekly reports will be provided to Pinal County Public Health Services District (PCPHSD) on the number of infectious diseases investigated and U of A personnel will enter information into the Arizona Department of Health Services (ADHS) investigative data management system. Also, will cooperate with PCPHSD in all practical matters necessary.

MOTION:

Approve as presented.

History

Time	Who	Approval
2/27/2024 10:57 AM	County Attorney	Yes
2/27/2024 11:24 AM	Grants/Hearings	Yes
2/27/2024 1:27 PM	Budget Office	Yes
2/27/2024 2:11 PM	County Manager	Yes
2/28/2024 9:05 AM	Clerk of the Board	Yes

ATTACHMENTS:
Click to download
Original Contract
Contract Amendment 1

PINAL COUNTY

INTERGOVERNMENTAL AGREEMENT
BETWEEN PINAL COUNTY AND THE UNIVERSITY OF ARIZONA
FOR INFECTIOUS DISEASE CASE INVESTIGATION SERVICES

This Intergovernmental Agreement (the **"Agreement")** is entered into by and between PINAL COUNTY, a political subdivision of the State of Arizona on behalf of the Pinal County Public Health Services District **("County")** and THE ARIZONA BOARD OF REGENTS acting for and on behalf of the University of Arizona **("University")** for the provision of Infectious Disease Case Investigation Services for the Pinal County Public Health Services District **("PCPHSD").** County and University are sometimes referred to herein individually as a **"Party"** and collectively as the **"Parties".**

RECITALS

WHEREAS, the Parties are authorized to enter into intergovernmental agreements for the purposes of contracting for services, jointly exercising powers common to the contracting parties, and taking joint or cooperative action pursuant to A.R.S. §§ 11-201 *et seq.,* and 11-951 *et seq.;* and

WHEREAS the County has established a Public Health Services District pursuant to A.R.S. §§ 36- 181 *et seq.;* and

WHEREAS the County has requested the University provide infectious disease case investigation services.

NOW, THEREFORE, the County and University (collectively, the "Parties"), pursuant to the above and in consideration of the matters and things hereinafter set forth, do mutually agree as follows:

AGREEMENT

1. **PURPOSE AND INTENT.** This IGA sets forth the terms and conditions under which University will work with the County in providing infectious disease case investigation for Pinal County.

2. **TERM, TERMINATION, AND RENEWAL.**
   - **A.** Unless terminated as otherwise provided in the Agreement, this Agreement shall become effective upon final signature and shall remain in effect for one (1) year.
   - **B.** Either Party may terminate this Agreement by providing sixty (60) days advance written notice of termination to the other Party.
   - **C.** Either Party to this Agreement may request an extension of this Agreement up to a maximum of two (2) additional six-month term(s). Any extension of this Agreement must be via a written mutually agreed upon and signed Amendment to this Agreement.

3. **AGREEMENT TYPE.**
   - **A.** Cost-Reimbursement. Under cost reimbursement compensation, the County will pay the Contractor for allowable incurred costs.
   - **B.** County shall provide for reimbursement for services performed. University shall make an accounting of expenditures.

4. **SCOPE OF WORK.** University shall provide infectious disease case investigation services requested by the County.
   - **A.** **County** agrees to:
     1) Cooperate with University in all practical matters necessary to effectuate the purpose and intent of this Agreement.
     2) Make every effort to process payment for acceptable services within thirty (30) calendar days after receipt of said services and a correct invoice.
     3) Provide a line list of cases that require investigation services.
   - **B.** **University** agrees to:
     1) Provide case investigation services, as needed, during surge events and outbreaks.
     2) Provide the training and onboarding of staff with appropriate documentation and continuing education/ training as needed.
     3) Provide County per email with weekly reports of the number of infectious disease cases investigated with completed key interview variables as well as key timeliness metrics.
     4) Enter case information into the ADHS approved statewide investigation data management system MEDSIS, Qualtrics or other approved source.
     5) Cooperate with County in all practical matters necessary to effectuate the purpose and intent of this Agreement.
     6) Timely submit detailed and itemized monthly invoices to County for all services arising out of this Agreement to the following e-mail or postal address:

        financeinvoices@pinal.gov
        Pinal County Finance Department
        Attn: Accounts Payable
        PO Box 1348
        Florence, AZ 85132

5. **SUPERVISION, EQUIPMENT AND MATERIALS.** No employee, agent, or volunteer of a Party shall be deemed to be an employee, agent or volunteer of the other Party. Each Party will be solely and entirely responsible for its acts and the acts of its employees, agents, servants, subcontractors, and volunteers during the performance of this Agreement. Each Party will have total responsibility for all salaries, wages, bonuses, retirement withholdings, worker's compensation, occupational disease compensation, unemployment compensation, other employment compensation, other employee benefits, and all employer's taxes and premiums concerning the persons who are supplied by that Party in the performance of this Agreement, and each Party agrees to hold the other Party harmless from any liability thereof.

   County shall have sole supervisory authority over County personnel, operations, services, property, facilities and materials; and University shall have sole supervisory authority over University personnel, operations and property.

   The Parties agree to avoid using the other Party's materials and/or equipment for purposes not directly associated with the purpose and intent of this Agreement without the prior express written consent from the Party to whom the equipment and/or materials belong. However, this provision shall not be construed to prohibit any use of materials or equipment of another Party that is merely nominal, incidental, or on an emergency basis.

6. **RECORDS.** Per A.R.S. § 41-2548(8), University shall retain and shall contractually require each Subcontractor to retain books and records *relating to any cost and pricing data submitted* in satisfaction of § 41-2543 for the period specified in the statute and those retained books and records are subject to audit by the County during that period. Per A.R.S. § 41-2548(8), University shall retain and shall contractually require each Subcontractor to retain books and records *relating to performance under the contract* for the period specified in the statute and those retained books and records are subject to audit by the County during that period. Accordingly, University or Subcontractor shall either make all such books and records available to the County at all reasonable times or produce the records at a designated County office on the County's demand, the choice of which being at the County's discretion. For the purpose of this paragraph, "reasonable times" are during normal business hours and in such a manner so as to not unreasonably interfere with normal business activities.

7. **INSURANCE.** Each Party acknowledges and affirms that it has appropriate and adequate insurance coverage for its official operations, duties and activities, and that it will maintain such coverage, at its own expense, for the duration of this Agreement.

8. **HEALTH INSURANCE PORTABILITY AND ACCOUNTABILITY ACT (HIPAA) OF 1996.** The University certifies that it is familiar with the requirements of HIPAA, as amended by the Health Information Technology for Economic and Clinical Health Act (HITECH Act) of 2009, and accompanying regulations and will comply with all applicable HIPAA requirements in the course of this Agreement. University certifies that it will cooperate with the County in the course of performance of the Agreement so that both County and University will be in compliance with HIPAA and other compliance officials required by HIPAA and its regulations. University will sign any documents that are reasonably necessary to keep County and University in compliance with HIPAA, including, but not limited to, business associate agreements.

9. **INDEMNIFICATION.**

   A. To the maximum extent permitted by law, each Party (as "lndemnitor") agrees to indemnify, defend and hold harmless the other Party, its officers, officials, agents, employees, or volunteers from and against any and all claims, losses, liability, costs or expenses (including reasonable attorney's fees) (hereinafter collectively referred to as "Claims") arising out of actions taken in performance of this IGA to the extent that such Claims are caused by the acts, omissions, negligence, misconduct, or other fault of the lndemnitor, its officers, officials, agents, employees, or volunteers. If a Claim or Claims by third parties becomes subject to this Section, the parties to this IGA that are the subject of the Claim or Claims shall expeditiously meet to agree upon a common and mutual defense pursuant to Subsection (B) below, including proportionate liability and proportionate payment of litigation fees, expenses and damages.

   B. The Parties when involved in a Claim or Claims brought by a third-party have a common interest in a coordinated defense in any lawsuit. In the absence of a conflict and to the extent applicable, the Parties agree to have one lawyer jointly represent the defendants in the lawsuit.

   C. The obligations under this Section shall survive the termination of this Agreement.

10. **GENERAL.**

   A. Notices. All notices to the other Party required under this Agreement shall be in writing and sent to the following personnel:

   If to University: Lauren Zajac, Associate Vice President
   Research Administration
   1670 E. Drachman Street, 9th Floor
   P.O. Box 210216
   Tucson, Arizona 85721-0216

Phone: (520) 621-0724
Email: uahscontracts@arizona.edu

If to County: Tascha Spears, Director
Pinal County Public Health Services District
P.O. Box 2945
Florence, AZ 85132

B. **Authority to Execute.** The individuals executing this Agreement on behalf of the Parties hereto represent that they have authority to execute this Agreement on behalf of such parties, and represent that upon execution, this Agreement shall be binding and no further action is or shall be necessary to make the Agreement enforceable in its entirety.

C. **Compliance with Laws and Policies.** The parties shall comply with all applicable federal, state and local laws, rules, regulations, and Executive Orders, without limitation to those designated within this Agreement. Furthermore, the Parties agree to abide by each Party's policies to the extent appropriate and required or permitted by law.

D. **Conflicts of Interest.** The provisions of A.R.S. § 38-511 relating to cancellation of contracts due to conflicts of interest shall apply to this Agreement.

E. **Counterparts.** This Agreement may be signed in counterparts, each of which shall be deemed an original, but all of which together shall constitute one and the same instrument.

F. **Entire Agreement.** This Agreement represents the entire agreement between the Parties and supersedes all prior negotiations, representations or agreements, either expressed or implied, written or oral. It is mutually understood and agreed that no alteration or variation of the terms and conditions of this Agreement shall be valid unless made in writing and signed by the Parties.

G. **E-Verify Requirements.** To the extent applicable under A.R.S. § 41-4401, the Parties and their respective subcontractors warrant compliance with all applicable federal immigration laws and regulations that relate to their employees and compliance with the E-verify requirements under A.R.S. § 23-214(A). A Party's or a subcontractor's breach of the above-mentioned warranty shall be deemed a material breach of the Agreement and may result in the termination of the Agreement by either party under the terms of this Agreement.

H. **Governing Law and Venue.** To the maximum extent possible, terms and conditions of this Agreement shall be governed by and interpreted in accordance with the laws

and regulations of the State of Arizona. Any action relating to this Agreement shall be brought in an Arizona Superior Court provided that nothing herein shall be interpreted as an express or implied waiver of either party's applicable immunity(ies).

I. **Headings.** The section headings throughout this Agreement shall not be used in the construction or interpretation hereof as they have no substantive effect and are for convenience only.

J. **Incorporation of Documents.** All documents referred to in this Agreement are hereby incorporated by reference.

K. **Interparty Dispute Resolution.** If a dispute between the Parties arises out of or relates to this Agreement, and if the dispute cannot be settled through negotiation within sixty (60) days, the Parties agree first to try in good faith to resolve the dispute by mediation before resorting to litigation. The Parties shall mutually agree upon a mediator. Each party agrees to bear its own costs of mediation, and to split the mediator fee. If mediation fails, any claim or action arising out of this Agreement shall be brought in an Arizona Superior Court.

L. **Modification.** This agreement shall not be modified or extended except by a mutually signed written agreement.

M. **No Joint Venture.** It is not intended by this Agreement to, and nothing contained in this Agreement shall, be construed to, create any partnership, joint venture or employment relationship between the Parties or create any employer-employee relationship between the Parties' employees. Neither Party shall be liable for any debts, accounts, obligations or other liabilities whatsoever of the other Party, including, but without limitation, the other Party's obligation to withhold Social Security and income taxes for itself or any of its employees.

N. **No Third Party Beneficiaries.** Nothing in this Agreement is intended to create duties or obligations to or rights in third parties not Parties to this Agreement or affect the legal liability of either Party to the Agreement by imposing any standard of care with respect to the maintenance of public facilities different from the standard of care imposed by law.

O. **Non-Appropriation.** Notwithstanding any other provision in this Agreement, this Agreement may be terminated if for any reason either party does not appropriate sufficient monies for the purpose of maintaining this Agreement. In the event of such cancellation, the canceling party shall have no further obligation other than for payment for services rendered prior to cancellation.

P. Non-Assignment. This Agreement has been entered into based upon the personal reputation, expertise and qualifications of the Parties. Neither Party shall assign its interest in this Agreement, in whole or in part, without the prior written consent of the other Party. Neither Party shall assign any monies due or to become due to it hereunder without the prior written consent of the other Party.

Q. Indirect Rate. The University agrees for any project requested by the County that is funded by State appropriated or other type of State funding, the University shall charge an Indirect Rate no greater than twenty-five percent (25%).

R. Non-Discrimination and Compliance with Civil Rights. To the extent applicable by law, the Parties agree to comply with A.R.S. Title 41, Chapter 9 (Civil Rights), Arizona Executive Orders 75-5 and 99-4 and any other federal or state laws relating to equal opportunity and nondiscrimination, including the Americans with Disabilities Act.

In the performance of this contract, neither party shall discriminate against any employee, client or any other individual in any way because of that person's age, race, creed, color, religion, sex, disability or national origin.

S. Property of the County.

1) Equipment. Except as provided below or otherwise agreed to by the parties, the title to any and all equipment acquired through the expenditure of funds received from the County shall remain the property of the County, and as such shall remain under the sole direction, management and control of the County. When this Agreement is terminated, the disposition of all such property shall be determined by the County. For Fixed Price agreements, when the University provides the services/materials required by the Agreement, any and all equipment purchased by the University remains the property of the University. All purchases of equipment need to be reported to the County.

2) Title and Rights to Materials. It is the intention of the County and University that all material and intellectual property developed under this Agreement be used and controlled in ways to produce the greatest benefit to the parties to this Agreement and the citizens of the State of Arizona. As used in this paragraph, "Material" means all written and electronic information, recordings, reports, findings, research information, abstracts, results, software, data, discoveries, inventions, procedures and processes of services developed by the University and any other materials created, prepared or received by the University and subcontractors in performance of this Agreement. "Material" as used herein shall not include any pre-

existing data, information, materials, discoveries, inventions or any form of intellectual property invented, created, developed or devised by University (or its employees, subcontractors or agents) prior to the commencement of the services funded by this Agreement or that may result from University's involvement in other service activities that are not funded by the Agreement.

3) Title and exclusive copyright to all Material shall vest in the State of Arizona, subject to any rights reserved on behalf of the federal government. As State agencies and instrumentalities, both County and University shall have full, complete, perpetual, irrevocable and non-transferable rights to reproduce, duplicate, adapt, make derivative works, distribute, display, disclose, publish and otherwise use any and all Material. The University's right to use Material shall include the following rights: the right to use the Material in connection with its internal, non-profit research and educational activities, the right to present at academic or professional meetings or symposia and the right to publish in journals, theses, dissertations or otherwise of University's own choosing. University agrees to provide the County with a right of review prior to any publication or public presentation of the Material, and the County shall be entitled to request the removal of its confidential information or any other content the disclosure of which would be contrary to the best interest of the County. Neither party shall release confidential information to the public without the prior expressly written permission of the other, unless required by the State public records statutes or other law, including a court order. Each party agrees to give recognition to the other party in all public presentations or publications of any Material, when releasing or publishing them.

4) In addition, the County and University agree that any and all Material shall be made freely available to the public to the extent it is in the best interest of the County. However, if either party wants to license or assign an intellectual property interest in the material to a third-party for monetary compensation, County and University agree to convene to determine the relevant issues of title, copyright, patent and distribution of revenue. In the event of a controversy as to whether the Material is being used for monetary compensation or in a way that interferes with the best interest of the County, then the County will make the final decision. Notwithstanding the above, "monetary compensation" does not include compensation paid to an individual creator for traditional publications in academia (the copyrights to which are Employee-Excluded Works under ABOR Intellectual Property Policy

Section 6-908C.4.), an honorarium or other reimbursement of expenses for an academic or professional presentation, or an unprofitable distribution of Material.

T. Other Duties Imposed by Law. Nothing in this Agreement shall be construed as relieving the involved public agencies of any obligation or responsibility imposed on it by law.

U. Relationship of the Parties. Each Party shall act in its individual capacity and not as an agent, employee, partner, joint venture, associate, or any other representative capacity of the other party. Each Party shall be solely and entirely responsible for its acts or acts of its agents and employees during the performance of this Agreement. This Agreement shall not be construed to imply authority to perform any tasks, or accept any responsibility, not expressly set forth herein. This Agreement shall be strictly construed against the creation of a duty or responsibility unless the intention to do so is clearly and unambiguously set forth herein. Nothing contained in this Agreement confers any right to any person or entity not a party to this Agreement.

V. Severability. If any part, term or provision of this Agreement· shall be held illegal, unenforceable or in conflict with any law, the validity of the remaining portions and provisions hereof shall not be affected.

W. Uncontrollable Events. No Party shall be considered to be in default in the performance of any obligations under this Agreement (other than obligations of a Party to pay costs and expenses) if failure of performance is due to an uncontrollable event. The term "uncontrollable event" means any cause beyond the control of the Party affected, including but not limited to flood, earthquake, storm, fire, epidemic, war, riot, civil disturbance or disobedience, labor dispute, and action or non-action by or failure to obtain the necessary authorizations or approvals from any governmental agency or authority or the electorate, labor or material shortage, sabotage and restraint by court order or public authority, that by exercise of due diligence and foresight the Party reasonably could not have been expected to avoid and that by exercise of due diligence it will be unable to overcome. A Party that is rendered unable to fulfill any obligation by reason of an uncontrollable event shall exercise due diligence to remove such inability with all reasonable dispatch.

X. Waiver. The failure of either Party to insist in any one or more instances on performance of any of the terms or conditions of this Agreement or to exercise any right or privilege contained herein shall not be considered as thereafter waiving such terms, conditions, rights or privileges, and they shall remain in full force and effect.

PINAL COUNTY

Y. Workers' Compensation. To the extent applicable by law, each Party shall comply with the notice of A.R.S. § 23-1022(E). For purposes of A.R.S. § 23-1022, each Party shall be considered the primary employer of all personnel currently or hereafter employed by that Party, irrespective of the operations of protocol in place, and said Party shall have the sole responsibility for the payment of Worker's Compensation benefits or other fringe benefits of said employees.

IN WITNESS WHEREOF, the parties hereto have caused this Agreement to be executed by the following duly authorized representatives:

For Pinal County:

By: _____
Jeff Serdy, Chairman
Board of Directors

_____
Date

For the University:

By: _____
Elisha Johnson, JD
Director, Clinical Trials & Contracting

1/31/2023
_____
Date

ATTEST:

By: _____
Clerk of the Board

_____
Date

READ AND ACKNOWLEDGED:

By: _____
Kristen Pogreba-Brown, Ph.D., M.P.H.

1/27/2023
_____
Date

APPROVED AS TO FORM:

_____
Deputy County Attorney

_____
Date

PINAL COUNTY

Appendix A

Annual Services Cost Reimbursement Estimations

Description	Frequency	Estimated Total (Annually)
Personnel/Salaries	Monthly as cost incurred	Estimated $379,990
Fringe Benefits/ Employee- Related Expenses	Monthly as cost incurred	Estimated $88,949
Indirect (F&A Costs)	Monthly as cost incurred	Estimated $111,061
Total		**Estimated $580,000**

This contract shall not exceed $580,000 annually

Leo Lew
County Manager

Merissa Mendoza, MPA, RDN, IBCLC
Director, Interim
Public Health

Himanshu Patel
Deputy County Manager

MaryEllen Sheppard
Deputy County Manager

Cathryn Whalen
Deputy County Manager

Contract Amendment

Pinal County Public Health Services District
971 N. Jason Lopez Circle, Bldg. D
PO Box 2945
Florence, AZ 85132

Contract 202302UOFA
Amendment #1
Finance Manager: Anela Arciga
Anela.Arciga@Pinal.gov

Infectious Disease Case Investigation Services

Contractor Name: University of Arizona

Pursuant to Paragraph 2 (TERM, TERMINATION, AND RENEWAL), and Paragraph 10 Section L (Modification) the referenced Contract shall be amended as follows:

1. The term of this contract is hereby extended through August 14, 2024.
2. All other Terms, Conditions, and Pricing remain the same.

Contractor hereby acknowledges receipt and understanding of the above amendment.

BY: Elisha Johnson, JD
(Name)

Sr. Director, Clinical Trials and Contracting
(Title)

(Signature)

DATE: 2/15/2024

The above reference contract amendment is hereby executed this date by the County.

BY: Mike Goodman
(Name)

Chairman, Board of Directors
(Title)

(Signature)

DATE:

Exhibit A

Contract Pricing

2024-2025 Services Cost Reimbursement Estimations

Description	**Frequency**	**Estimated Total (Per Six Months)**
Personnel/Salaries	Monthly as cost incurred	Estimated $189,995
Fringe Benefits/ Employee-Related Expenses	Monthly as cost incurred	Estimated $44,475
Indirect (F&A Costs)	Monthly as cost incurred	Estimated $55,530
Total		**Estimated $290,000**

This contract shall not exceed $580,000 annually

PINAL COUNTY
WIDE OPEN OPPORTUNITY

AGENDA ITEM

March 6, 2024 ADMINISTRATION BUILDING A
FLORENCE, ARIZONA

REQUESTED BY:

Funds #: 82

Dept. #: 359

Dept. Name: Public Health

Director: Merissa Mendoza

BRIEF DESCRIPTION OF AGENDA ITEM AND REQUESTED BOARD ACTION:

Discussion/approval/disapproval of Award Agreement No. CTR068315 under the Sexually Transmitted Infection Investigations program between the Arizona Department of Health Services and Pinal County Health Services District, through the Pinal County Board of Supervisors, beginning January 1, 2024, ending December 31, 2028, for $83,150. This grant will be used by the Public Health Department for sexually transmitted illness control services. The funding is included in the current budget. (Zia Helgeson-Budrys/Merissa Mendoza)

BRIEF DESCRIPTION OF THE FISCAL CONSIDERATIONS AND/OR EXPECTED FISCAL IMPACT OF THIS AGENDA ITEM:

The funding is included in the current budget. There is no match requested. There is no impact to the general fund.

BRIEF DESCRIPTION OF THE EXPECTED PERFORMANCE IMPACT OF THIS AGENDA ITEM:

This grant will be used by the Public Health Department for sexually transmitted illness control services.

MOTION:

Approve as presented.

History

Time	Who	Approval
2/21/2024 8:48 AM	County Attorney	Yes
2/21/2024 1:28 PM	Grants/Hearings	Yes
2/22/2024 12:27 PM	Budget Office	Yes
2/23/2024 4:31 PM	County Manager	Yes
2/26/2024 9:06 AM	Clerk of the Board	Yes

ATTACHMENTS:

Click to download

☐ Grant Request
☐ Contract

PINAL COUNTY
WIDE OPEN OPPORTUNITY

Board of Supervisors Grant Request

Board of Supervisors meeting date: _____

Department seeking grant: _____

Name of Granting Agency: _____

Name of Grant Program: _____

Project Name: _____

Amount requested: _____

Match amount, if applicable: _____

Application due date: _____

Anticipated award date/fiscal year: _____

What strategic priority/goal does this project address?: _____

Applicable Supervisor District: _____

Brief description of project:

Approval received per Policy 8.20: _____ OnBase Grant #: _____

Please select one:

Discussion/Approve/Disapproval consent item _____

New item requiring discussion/action _____

Public Hearing required _____

Please select all that apply:

Request to submit the application _____

Retroactive approval to submit _____

Resolution required _____

Request to accept the award _____

Request to approve/sign an agreement _____

Budget Amendment required _____

Program/Project update and information _____

INTERGOVERNMENTAL AGREEMENT (IGA)

Contract No. CTR068315

ARIZONA DEPARTMENT OF HEALTH SERVICES
150 North 18th Avenue, Suite 530
Phoenix, Arizona 85007

Procurement Officer
Darrnell Welch

Project Title: Sexually Transmitted Infection Investigations

Begin Date: January 1, 2024

Geographic Service Area: Pinal County

Termination Date: December 31, 2028

Arizona Department of Health Services has authority to contract for services specified herein in accordance with A.R.S. §§ 11-951, 11-952, 36-104 and 36-132. The Contractor represents that it has authority to contract for the performance of the services provided herein pursuant to:

[X] **Counties:** **A.R.S. §§ 11-201, 11-951, 11-952 and 36-182.**

Amendments signed by each of the parties and attached hereto are hereby adopted by reference as a part of this Contract, from the effective date of the Amendment, as if fully set out herein.

Arizona Transaction (Sales) Privilege:

_____

Federal Employer Identification No.:

_____

Tax License No.:

_____

Contractor Name: Pinal County Public Health Department
Address: 971 N. Jason Lopez Circle, Bldg D, P.O. Box 2945, Florence, AZ 85132-2945

FOR CLARIFICATION, CONTACT:

Name: Jabette Franco

Phone: 520-858-5768

FAX No:

E-mail: jabette.franco@pinal.gov

CONTRACTOR SIGNATURE:
The Contractor agrees to perform all the services set forth in the Agreement and Work Statement.

Signature of Person Authorized to Sign Date

Print Name and Title

This Contract shall henceforth be referred to as Contract

No. CTR068315

The Contractor is hereby cautioned not to commence any billable work or provide any material, service or construction under this Contract until Contractor receives a fully executed copy of the Contract

State of Arizona

Signed this _____ day of _____, 202_

Procurement Officer

CONTRACTOR ATTORNEY SIGNATURE:
Pursuant to A.R.S. § 11-952, the undersigned Contractor's Attorney has determined that this Intergovernmental Agreement is in proper form and is within the powers and authority granted under the laws of Arizona.

Signature of Person Authorized to Sign Date

Print Name and Title

Contract, No. CTR068315, is an Agreement between public agencies, has been reviewed pursuant to A.R.S. § 11-952 by the undersigned Assistant Attorney General, who has determined that it is in the proper form and is within the powers granted under the laws of the State of Arizona to those parties to the Agreement represented by the Attorney General.

The Attorney General, BY:

Signature **Date**

Assistant Attorney General:

1. Definition of Terms As used in this Contract, the terms listed below are defined as follows:

As used in this Contract, the terms listed below are defined as follows:

1.1 “Attachment” means any item in the Contract which requires the Contractor to submit as part of the Offer.

1.2 “Contract” means the combination of the Contract documents, including the Terms and Conditions, and the Specifications and Statement or Scope of Work; and any Contract Amendments.

1.3 "Contract Amendment" means a written document signed by the Procurement Officer that is issued for the purpose of making changes in the Contract.

1.4 “Contractor” means any person who has a Contract with the State.

1.5 “Data” means recorded information, regardless of form or the media on which it may be recorded. The term may include technical data and computer software. The term does not include information incidental to contract administration, such as financial, administrative, cost or pricing, or management information.

1.6 “Days” means calendar days unless otherwise specified.

1.7 “Exhibit” means any item labeled as an Exhibit in the Contract generally containing maps, schematics, examples of reports, or other documents that will be used to perform the requirements of the Scope of Work after contract award.

1.8 “Gratuity” means a payment, loan, subscription, advance, deposit of money, services, or anything of more than nominal value, present or promised, unless consideration of substantially equal or greater value is received.

1.9 “Materials” means all property, including equipment, supplies, printing, insurance and leases of property but does not include land, a permanent interest in land or real property or leasing space.

1.10 “Procurement Officer” means the person, or his or her designee, duly authorized by the State to enter into and administer Contracts and make written determinations with respect to the Contract.

1.11 “Services” means the furnishing of labor, time or effort by a Contractor or Subcontractor which does not involve the delivery of a specific end product other than required reports and performance, but does not include employment agreements or collective bargaining agreements.

1.12 “State” means any department, commission, council, board, bureau, committee, institution, agency, government corporation or other establishment or official of the executive branch or corporation commission of the State of Arizona that executes the Contract.

1.13 “State Fiscal Year” means the period beginning with July 1 and ending June 30.

1.14 “Subcontract” means any Contract, express or implied, between the Contractor and another party or between a Subcontractor and another party delegating or assigning, in whole or in part, the making or furnishing of any Materials or any Services required for the performance of the Contract.

1.15 “Subcontractor” means a person who contracts to perform work or render Services to a Contractor or to another Subcontractor as a part of a Contract with the State.

2. Contract Type

This Contract shall be:

X Cost Reimbursement

3. Contract Interpretation

3.1. Arizona Law. The Arizona law applies to this Contract including, where applicable, the Uniform Commercial Code as adopted by the State of Arizona and the Arizona Procurement Code, Arizona Revised Statutes (A.R.S.) Title 41, Chapter 23, and its implementing rules, Arizona Administrative Code (A.A.C.) Title 2, Chapter 7;

3.2. Implied Contract Terms. Each provision of law and any terms required by law to be in this Contract are a part of this Contract as if fully stated in it;

3.3. Contract Order of Precedence. In the event of a conflict in the provisions of the Contract, as accepted by the State and as they may be amended, the following shall prevail in the order set forth below:

3.3.1. Terms and Conditions,

3.3.2. Statement or Scope of Work,

3.3.3. Specifications,

3.3.4. Attachments,

3.3.5. Exhibits, then

3.3.6. Any other documents referenced or included in the Contract including, but not limited to, any documents that do not fall into one (1) of the above categories.

3.4. Relationship of Parties. The Contractor under this Contract is an independent Contractor. Neither party to this Contract shall be deemed to be the employee or agent of the other party to the Contract;

3.5. Severability. The provisions of this Contract are severable. Any term or condition deemed illegal or invalid shall not affect any other term or condition of the Contract;

3.6. No Parole Evidence. This Contract is intended by the parties as a final and complete expression of their agreement. No course of prior dealings between the parties and no usage of the trade shall supplement or explain any terms used in this document and no other understanding either oral or in writing shall be binding; and

3.7. No Waiver. Either party's failure to insist on strict performance of any term or condition of the Contract shall not be deemed a waiver of that term or condition even if the party accepting or acquiescing in the nonconforming performance knows of the nature of the performance and fails to object to it.

4. Contract Administration and Operation

4.1. Term. As indicated on the signature page of the Contract, the Contract shall be effective as of the Begin Date and shall remain effective until the Termination Date;

4.2. Contract Renewal. This Contract shall not bind, nor purport to bind, the State for any contractual commitment in excess of the original Contract period. The term of the Contract shall not exceed five (5) years. However, if the original Contract period is for less than five (5) years, the State shall have the

right, at its sole option, to renew the Contract, so long as the original Contract period together with the renewal periods does not exceed five (5) years. If the State exercises such rights, all terms, conditions and provisions of the original Contract shall remain the same and apply during the renewal period with the exception of price and Scope of Work, which may be renegotiated;

4.3. New Budget Term. If a budget term has been completed in a multi-term Contract, the parties may agree to change the amount and type of funding to accommodate new circumstances in the next budget term. Any increase or decrease in funding at the time of the new budget term shall coincide with a change in the Scope of Work or change in cost of services as approved by the Arizona Department of Health Services;

4.4. Records. Under A.R.S. § 35-214 and § 35-215, the Contractor shall retain and shall contractually require each Subcontractor to retain any and all Data and other "records" relating to the acquisition and performance of the Contract for a period of five (5) years after the completion of the Contract. All records shall be subject to inspection and audit by the State at reasonable times. Upon request, the Contractor shall produce a legible copy of any or all such records;

4.5. Non-Discrimination. The Contractor shall comply with State Executive Order Nos. 2023-09, 2023-01, 2009-09, and any and all other applicable Federal and State laws, rules and regulations, including the Americans with Disabilities Act. Contractor shall include these provisions in contracts with Subcontractors when required by Federal or State law;

4.6. Audit. Pursuant to A.R.S. § 35-214, at any time during the term of this Contract and five (5) years thereafter, the Contractor's or any Subcontractor's books and records shall be subject to audit by the State and, where applicable, the Federal Government, to the extent that the books and records relate to the performance of the Contract or Subcontract;

4.7. Facilities Inspection and Materials Testing. The Contractor agrees to permit access to its facilities, Subcontractor facilities, and the Contractor's processes or services, at reasonable times for inspection of the facilities or Materials covered under this Contract as required under A.R.S. § 41-2547. The State shall also have the right to test, at its own cost, the Materials to be supplied under this Contract. Neither inspection of the Contractor's facilities nor Materials testing shall constitute final acceptance of the Materials or Services. If the State determines non-compliance of the Materials, the Contractor shall be responsible for the payment of all costs incurred by the State for testing and inspection;

4.8. Notices. Notices to the Contractor required by this Contract shall be made by the State to the person indicated on the Offer and Acceptance form submitted by the Contractor unless otherwise stated in the Contract. Notices to the State required by the Contract shall be made by the Contractor to the Solicitation Contact Person indicated on the Solicitation, stated in the Contract, or listed on the State's eProcurement system. An authorized Procurement Officer and an authorized Contractor representative may change their respective person to whom notice shall be given by written notice to the other and an amendment to the Contract shall not be necessary;

4.9. Advertising, Publishing and Promotion of Contract. The Contractor shall not use, advertise or promote information for commercial benefit concerning this Contract without the prior written approval of the Procurement Officer;

4.10. Continuous Improvement. Contractor shall recommend continuous improvements on an on-going basis in relation to any Materials and Services offered under the Contract, with a view to reducing State costs and improving the quality and efficiency of the provision of Materials or Services. State may require Contractor to engage in continuous improvements throughout the term of the Contract;

4.11. Other Contractors. State may undertake on its own or award other contracts to the same or other suppliers for additional or related work. In such cases, the Contractor shall cooperate fully with State employees and such other suppliers and carefully coordinate, fit, connect, accommodate, adjust, or

sequence its work to the related work by others. Where the Contract requires handing-off Contractor's work to others, Contractor shall cooperate as State instructs regarding the necessary transfer of its work product, Materials, Services, or records to State or the other suppliers. Contractor shall not commit or permit any act that interferes with the State's or other suppliers' performance of their work, provided that, State shall enforce the foregoing section equitably among all its suppliers so as not impose an unreasonable burden on any of them;

4.12. Ownership of Intellectual Property:

4.12.1. Rights In Work Product. All intellectual property originated or prepared by Contractor pursuant to the Contract, including but not limited to, inventions, discoveries, intellectual copyrights, trademarks, trade names, trade secrets, technical communications, records reports, computer programs and other documentation or improvements thereto, including Contractor's administrative communications and records relating to the Contract, are considered work product and Contractor's property, provided that, State has Government Purpose Rights to that work product as and when it was delivered to State,

4.12.2. "Government Purpose Rights" are:

4.12.2.1. the unlimited, perpetual, irrevocable, royalty free, non-exclusive, worldwide right to use, modify, reproduce, release, perform, display, sublicense, disclose and create derivatives from that work product without restriction for any activity in which State is a party;

4.12.2.2. the right to release or disclose that work product to third parties for any State government purpose; and

4.12.2.3. the right to authorize those to whom it rightfully releases or discloses that work product to use, modify, release, create derivative works from the work product for any State government purpose; such recipients being understood to include the federal government, the governments of other states, and various local governments.

4.12.3. "Government Purpose Rights" do not include any right to use, modify, reproduce, perform, release, display, create derivative works from or disclose that work product for any commercial purpose, or to authorize others to do so,

4.12.4. Joint Developments. The Contractor and State may each use equally any ideas, concepts, know-how, or techniques developed jointly during the course of the Contract, and may do so at their respective discretion, without obligation of notice or accounting to the other party,

4.12.5. Pre-existing Material. All pre-existing software and other Materials developed or otherwise obtained by or for Contractor or its affiliates independently of the Contract or applicable Purchase Orders are not part of the work product to which rights are granted State under subparagraph 3.9.1 above, and will remain the exclusive property of Contractor, provided that:

4.12.5.1. any derivative works of such pre-existing Materials or elements thereof that are created pursuant to the Contract are part of that work product;

4.12.5.2. any elements of derivative work of such pre-existing Materials that was not created pursuant to the Contract are not part of that work product; and

4.12.5.3. except as expressly stated otherwise, nothing in the Contract is to be construed to interfere or diminish Contractor's or its affiliates' ownership of such pre-existing Materials.

4.12.6. Developments Outside of Contract. Unless expressly stated otherwise in the Contract, this Section does not preclude Contractor from developing competing Materials outside the Contract, irrespective of any similarity to Materials delivered or to be delivered to State hereunder.

4.13. Property of the State. If there are any materials that are not covered by Section 4.9 above created under this Contract, including but not limited to, reports and other deliverables, these materials are the sole property of the State. The Contractor is not entitled to a patent or copyright on those materials and may not transfer the patent or copyright to anyone else. The Contractor shall not use or release these materials without the prior written consent of the State;

4.14. Federal Immigration and Nationality Act. Contractor shall comply with all federal, state and local immigration laws and regulations relating to the immigration status of their employees during the term of the Contract. Further, Contractor shall flow down this requirement to all Subcontractors utilized during the term of the Contract. The State shall retain the right to perform random audits of Contractor and Subcontractor records or to inspect papers of any employee thereof to ensure compliance. Should the State determine that the Contractor or any Subcontractors be found noncompliant, the State may pursue all remedies allowed by law, including, but not limited to: suspension of work, termination of the Contract for default and suspension or debarment of the Contractor;

4.15. E-Verify Requirements. In accordance with A.R.S. § 41-4401, Contractor warrants compliance with all Federal immigration laws and regulations relating to employees and warrants its compliance with Section A.R.S. § 23- 214, Subsection A;

4.16. Offshore Performance of Work involving Data is Prohibited. Any Services that are described in the specifications or scope of work that directly serve the State of Arizona or its clients and involve access to Data shall be performed within the defined territories of the United States;

4.17. Certifications Required by State Law:

4.17.1. If Contractor is a Company as defined in A.R.S. § 35-393, Contractor certifies that it is not currently engaged in a boycott of Israel as described in A.R.S. §§ 35-393 *et seq*. and will refrain from any such boycott for the duration of this Contract, and

4.17.2. Contractor further certifies that it shall comply with A.R.S. § 35-394, regarding use of the forced labor of ethnic Uyghurs, as applicable.

4.18. Protection of State Cybersecurity Interests. The Contractor shall comply with State Executive Order No. 2024-10, which includes, but is not limited to, a prohibition against (a) downloading and installing of TikTok on all State-owned and State-leased information technology; and (b) accessing TikTok through State information technology.

5. Costs and Payments

5.1. Payments. Payments shall comply with the requirements of A.R.S. Titles 35 and 41, Net 30 days. Upon receipt and acceptance of Materials or Services, the Contractor shall submit a complete and accurate invoice for payment from the State within thirty (30) days;

5.2. Delivery. Unless stated otherwise in the Contract, per A.R.S. § 47-2319, all prices shall be F.O.B. (“free on board”) Destination and shall include all freight delivery and unloading at the destination;

5.3. Firm, Fixed Price. Unless stated otherwise in the Special Terms and Conditions of the Contract, all prices shall be firm-fixed-prices;

5.4. Applicable Taxes:

5.4.1. Payment of Taxes. The Contractor shall be responsible for paying all applicable taxes,

5.4.2. State and Local Transaction Privilege Taxes. The State of Arizona is subject to all applicable state and local transaction privilege taxes. Transaction privilege taxes apply to the sale and are the responsibility of the seller to remit. Failure to collect such taxes from the buyer does not relieve the seller from its obligation to remit taxes,

5.4.3. Tax Indemnification. Contractor and all Subcontractors shall pay all Federal, state and local taxes applicable to its operation and any persons employed by the Contractor. Contractor shall, and require all Subcontractors to hold the State harmless from any responsibility for taxes, damages and interest, if applicable, contributions required under Federal, and/or state and local laws and regulations and any other costs including transaction privilege taxes, unemployment compensation insurance, Social Security and Worker's Compensation, and

5.4.4. IRS W9 Form. In order to receive payment the Contractor shall have a current I.R.S. W9 Form on file with the State of Arizona, unless not required by law.

5.5. Availability of Funds for the Next State Fiscal Year. Funds may not presently be available for performance under this Contract beyond the current State Fiscal Year. No legal liability on the part of the State for any payment may arise under this Contract beyond the current State Fiscal Year until funds are made available for performance of this Contract;

5.6. Availability of Funds for the Current State Fiscal Year. Should the State Legislature enter back into session and reduce the appropriations or for any reason and these Materials or Services are not funded, the State may take any of the following actions:

5.6.1. Accept a decrease in price offered by the Contractor,

5.6.2. Cancel the Contract, or

5.6.3. Cancel the Contract and re-solicit the requirements.

6. Contract Changes

6.1. Amendments. This Contract is issued under the authority of the Procurement Officer who signed this Contract. The Contract may be modified only through a Contract Amendment within the scope of the Contract. Changes to the Contract, including the addition of Services or Materials, the revision of payment terms, or the substitution of Services or Materials, directed by a person who is not specifically authorized by the Procurement Officer in writing or made unilaterally by the Contractor are violations of the Contract and of applicable law. Such changes, including unauthorized written Contract Amendments shall be void and without effect, and the Contractor shall not be entitled to any claim under this Contract based on those changes;

6.2. Subcontracts. The Contractor shall not enter into any Subcontract under this Contract for the performance of this Contract without the advance written approval of the Procurement Officer as described in Arizona State Procurement Office Standard Procedure 002. The Contractor shall clearly list any proposed Subcontractors and the Subcontractor's proposed responsibilities. The Subcontract shall incorporate by reference the terms and conditions of this Contract; and

6.3. Assignment and Delegation. The Contractor shall not assign any right nor delegate any duty under this Contract without the prior written approval of the Procurement Officer. The State shall not unreasonably withhold approval.

7. Risk and Liability

7.1. Risk of Loss. The Contractor shall bear all loss of conforming Materials covered under this Contract until received by authorized personnel at the location designated in the purchase order or Contract. Mere receipt does not constitute final acceptance. The risk of loss for nonconforming Materials shall remain with the Contractor regardless of receipt;

7.2. Indemnification:

7.2.1. Contractor/Vendor Indemnification (Not Public Agency).To the fullest extent permitted by law, Contractor shall defend, indemnify, and hold harmless the State of Arizona, and its departments, agencies, boards, commissions, universities, officers, officials, agents, and employees (hereinafter referred to as “Indemnitee”) from and against any and all claims, actions, liabilities, damages, losses, or expenses (including court costs, attorneys’ fees, and costs of claim processing, investigation and litigation) (hereinafter referred to as “Claims”) for bodily injury or personal injury (including death), or loss or damage to tangible or intangible property caused, or alleged to be caused, in whole or in part, by the negligent or willful acts or omissions of Contractor or any of its owners, officers, directors, agents, employees or Subcontractors. This indemnity includes any claim or amount arising out of, or recovered under, the Workers’ Compensation Law or arising out of the failure of such Contractor to conform to any federal, state, or local law, statute, ordinance, rule, regulation, or court decree. It is the specific intention of the parties that the Indemnitee shall, in all instances, except for Claims arising solely from the negligent or willful acts or omissions of the Indemnitee, be indemnified by Contractor from and against any and all claims. It is agreed that Contractor will be responsible for primary loss investigation, defense, and judgment costs where this indemnification is applicable. In consideration of the award of this Contract, the Contractor agrees to waive all rights of subrogation Insurance and Indemnification Guidelines for State of Arizona Contracts Professional Service Contracts against the State of Arizona, its officers, officials, agents, and employees for losses arising from the work performed by the Contractor for the State of Arizona. This indemnity shall not apply if the Contractor or Subcontractor(s) is/are an agency, board, commission or university of the State of Arizona, and

7.2.2. Public Agency Language Only. Each party (as 'indemnitor') agrees to indemnify, defend, and hold harmless the other party (as 'indemnitee') from and against any and all claims, losses, liability, costs, or expenses (including reasonable attorney's fees) (hereinafter collectively referred to as 'claims') arising out of bodily injury of any person (including death) or property damage but only to the extent that such claims which result in vicarious/derivative liability to the indemnitee, are caused by the act, omission, negligence, misconduct, or other fault of the indemnitor, its officers, officials, agents, employees, or volunteers.

7.3. Indemnification - Patent and Copyright. The Contractor shall indemnify and hold harmless the State against any liability, including costs and expenses, for infringement of any patent, trademark or copyright arising out of Contract performance or use by the State of Materials furnished or work performed under this Contract. The State shall reasonably notify the Contractor of any claim for which it may be liable under this paragraph. If the Contractor is insured pursuant to A.R.S. § 41-621 and § 35-154, this paragraph shall not apply;

7.4. Force Majeure:

7.4.1. Except for payment of sums due, neither the Contractor nor State shall be liable to the other nor deemed in default under this Contract if and to the extent that such party’s performance of this Contract is prevented by reason of force majeure. The term “force majeure” means an occurrence that is beyond the control of the party affected and occurs without its fault or negligence. Without limiting the foregoing, force majeure includes: acts of God, acts of the public enemy, war, riots, strikes, mobilization, labor disputes, civil disorders, fire, flood, lockouts, injunctions-intervention-acts, failures or refusals to act by government authority, and other similar

occurrences beyond the control of the party declaring force majeure which such party is unable to prevent by exercising reasonable diligence,

7.4.2. Force Majeure shall not include the following occurrences:

7.4.2.1. Late delivery of equipment, Materials, or Services caused by congestion at a manufacturer's plant or elsewhere, or an oversold condition of the market;

7.4.2.2. Late performance by a Subcontractor unless the delay arises out of a force majeure occurrence in accordance with this force majeure term and condition; or

7.4.2.3. Inability of either the Contractor or any Subcontractor to acquire or maintain any required insurance, bonds, licenses or permits.

7.4.3. If either the Contractor or State is delayed at any time in the progress of the work by force majeure, the delayed party shall notify the other party in writing of such delay, as soon as is practicable and no later than the following working day, of the commencement thereof and shall specify the causes of such delay in such notice. Such notice shall be delivered or mailed certified-return receipt and shall make a specific reference to this article, thereby invoking its provisions. The delayed party shall cause such delay to cease as soon as practicable and shall notify the other party in writing when it has done so. The time of completion shall be extended by Contract Amendment for a period of time equal to the time that results or effects of such delay prevent the delayed party from performing in accordance with this Contract, and

7.4.4. Any delay or failure in performance by either party hereto shall not constitute default hereunder or give rise to any claim for damages or loss of anticipated profits if, and to the extent that such delay or failure is caused by force majeure.

7.5. Third Party Antitrust Violations. The Contractor assigns to the State any claim for overcharges resulting from antitrust violations to the extent that those violations concern Materials or Services supplied by third parties to the Contractor, toward fulfillment of this Contract.

8. Warranties

8.1. Liens. The Contractor warrants that the Materials supplied under this Contract are free of liens and shall remain free of liens;

8.2. Quality. Unless otherwise modified elsewhere in the Terms and Conditions, the Contractor warrants that, for one (1) year after acceptance by the State of the Materials, they shall be:

8.2.1. Of a quality to pass without objection in the trade under the Contract description,

8.2.2. Fit for the intended purposes for which the Materials are used,

8.2.3. Within the variations permitted by the Contract and are of even kind, quantity, and quality within each unit and among all units,

8.2.4. Adequately contained, packaged, and marked as the Contract may require, and

8.2.5. Conform to the written promises or affirmations of fact made by the Contractor.

8.3. Conformity to Requirements:

8.3.1. Contractor warrants that, unless expressly provided otherwise elsewhere in the Contract, the Materials and Services will for one (1) year after acceptance and in each instance:

8.3.1.1. Conform to the requirements of the Contract, which by way of reminder include without limitation all descriptions, specifications, and drawings identified in the Scope of Work and any and all Contractor affirmations included as part of the Contract;

8.3.1.2. Be free from defects of material and workmanship;

8.3.1.3. Conform to or perform in a manner consistent with current industry standards; and

8.3.1.4. Be fit for the intended purpose or use described in the Contract.

8.3.2. Mere delivery or performance does not substitute for express acceptance by the State. Where inspection, testing, or other acceptance assessment of Materials or Services cannot be done until after installation or invoicing, the forgoing warranty will not begin until State's explicit acceptance of the Materials or Services.

8.4. Inspection/Testing. The warranties set forth in this Section 8 [Warranties] are not affected by inspection or testing of or payment for the Materials or Services by the State;

8.5. Contractor Personnel. Contractor warrants that its personnel will perform their duties under the Contract in a professional manner, applying the requisite skills and knowledge, consistent with industry standards, and in accordance with the requirements of the Contract. Contractor further warrants that its key personnel will maintain any and all certifications relevant to their work, and Contractor shall provide individual evidence of certification to State's authorized representatives upon request;

8.6. Compliance With Applicable Laws. The Materials and Services supplied under this Contract shall comply with all applicable federal, state, and local laws and policies (including, but not limited to, information technology policies, standards, and procedures available on the State's website and/or the website of any department, commission, council, board, bureau, committee, institution, agency, government corporation or other establishment or official of the executive branch or corporation commission of the State of Arizona). Federal requirements may be incorporated into this Contract, if required, pursuant to A.R.S. § 41-2637. Contractor shall maintain any and all applicable license and permit requirements. This requirement includes, but is not limited to, any and all Arizona state statutes that impact state contracts, regardless of whether those statutory references have been removed during the course of contract negotiations; this is notice to Contractors that the State does not have the authority to modify Arizona state law by contract;

8.7. Intellectual Property. Contractor warrants that the Materials and Services do not and will not infringe or violate any patent, trademark, copyright, trade secret, or other intellectual property rights or laws, except only to the extent the Specifications do not permit use of any other product and Contractor is not and cannot reasonably be expected to be aware of the infringement or violation;

8.8. Licenses and Permits. Contractor warrants that it will maintain all licenses required to fully perform its duties under the Contract and all required permits valid and in force;

8.9. Operational Continuity. Contractor warrants that it will perform without relief notwithstanding being sold or acquired; no such event will operate to mitigate or alter any of Contractor's duties hereunder absent a consented delegation under paragraph 6.3. [Assignment and Delegation] that expressly recognizes the event;

8.10. Performance in Public Health Emergency. Contractor warrants that it will:

8.10.1. Have in effect, promptly after commencement, a plan for continuing performance in the event of a declared public health emergency that addresses, at a minimum:

8.10.1.1. Identification of response personnel by name;

8.10.1.2. Key succession and performance responses in the event of sudden and significant decrease in workforce; and

8.10.1.3. Alternative avenues to keep sufficient product on hand or in the supply chain.

8.10.2. Provide a copy of its current plan to State within three (3) business days after State's written request. If Contractor claims relief under paragraph 7.4 [Force Majeure] for an occurrence of force majeure that is a declared public health emergency, then that relief will be conditioned on Contractor having first implemented its plan and exhausted all reasonable opportunity for that plan implementation to overcome the effects of that occurrence, or mitigate those effects to the extent that overcoming entirely is not practicable,

8.10.3. A request from the State related to this paragraph 8.10 does not necessarily indicate that there has been an occurrence of force majeure, and the Contractor will not be entitled to any additional compensation or extension of time by virtue of having to implement a plan, and

8.10.4. Failure to have or implement an appropriate plan will be a material breach of contract.

8.11. Lobbying:

8.11.1. Prohibition. Contractor warrants that it will not engage in lobbying activities, as defined in 40 Code of Federal Regulations (CFR) part 34 and A.R.S. § 41-1231, *et seq*., using monies awarded under the Contract, provided that, the foregoing does not intend to constrain Contractor's use of its own monies or property, including without limitation any net proceeds duly realized under the Contract or any value thereafter derived from those proceeds; and upon award of the Contract, it will disclose all lobbying activities to State to the extent they are an actual or potential conflict of interest or where such activities could create an appearance of impropriety. Contractor shall implement and maintain adequate controls to assure compliance with above. Contractor shall obtain an equivalent warranty from all Subcontractors and shall include an equivalent no-lobbying provision in all Subcontracts, and

8.11.2. Exception. This paragraph 8.11 does not apply to the extent that the Services are defined in the Contract as being lobbying for State's benefit or on State's behalf.

8.12. Covered Telecommunications or Services. Contractor warrants that the Materials and Services rendered under this Agreement will not require Contractor to use for the State, or provide to the State to use, "covered telecommunications equipment or Services" as a substantial or essential component of any system, or as critical technology as part of any system, within the meaning of Federal Acquisition Regulation ("FAR") Section 52.204-25;

8.13. Debarment, Suspension, U.S. Government Restricted Party Lists. Contractor warrants that it is not, and its Subcontractors are not, on the U.S. government's Denied Parties List, the Unverified List, the Entities List, the Specially Designated Nationals and Blocked Parties List, and neither the Contractor nor any Subcontractors are presently debarred, suspended, proposed for debarment or otherwise declared ineligible for award of federal contracts or participation in federal assistance programs or activities;

8.14. False Statements. Contractor represents and warrants that all statements and information Contractor prepared and submitted in response to the Solicitation or as part of the Contract documents are current, complete, true, and accurate. If the Procurement Officer determines that Contractor submitted an Offer or Bid with a false statement, or makes material misrepresentations during the performance of the Contract, the Procurement Officer may determine that Contractor has materially breached the Contract and may void the submitted Offer or Bid and any resulting Contract; and

8.15. Survival of Rights and Obligations after Contract Expiration or Termination:

8.15.1. Survival of Warranty. All representations and warranties made by Contractor under the Contract will survive the expiration or earlier termination of the Contract,

8.15.2. Contractor's Representations and Warranties. All representations and warranties made by the Contractor under this Contract shall survive the expiration or termination hereof. In addition, the parties hereto acknowledge that pursuant to A.R.S. § 12-510, except as provided in A.R.S. § 12- 529, the State is not subject to or barred by any limitations of actions prescribed in A.R.S., Title 12, Chapter 5, and

8.15.3. Purchase Orders. The Contractor shall, in accordance with all terms and conditions of the Contract, fully perform and shall be obligated to comply with all purchase orders received by the Contractor prior to the expiration or termination hereof, unless otherwise directed in writing by the Procurement Officer, including, without limitation, all purchase orders received prior to but not fully performed and satisfied at the expiration or termination of this Contract.

9. State's Contractual Remedies

9.1. Right to Assurance. If the State in good faith has reason to believe that the Contractor does not intend to, or is unable to perform or continue performing under this Contract, the Procurement Officer may demand in writing that the Contractor give a written assurance of intent to perform. Failure by the Contractor to provide written assurance within the number of Days specified in the demand may, at the State's option, be the basis for terminating the Contract under the Uniform Terms and Conditions or other rights and remedies available by law or provided by the Contract;

9.2. Stop Work Order:

9.2.1. The State may, at any time, by written order to the Contractor, require the Contractor to stop all or any part of the work called for by this Contract for period(s) of days indicated by the State after the order is delivered to the Contractor. The order shall be specifically identified as a stop work order issued under this clause. Upon receipt of the order, the Contractor shall immediately comply with its terms and take all reasonable steps to minimize the incurrence of costs allocable to the work covered by the order during the period of work stoppage, and

9.2.2. If a stop work order issued under this clause is canceled or the period of the order or any extension expires, the Contractor shall resume work. The Procurement Officer shall make an equitable adjustment in the delivery schedule or Contract price, or both, and the Contract shall be amended in writing accordingly.

9.3. Non-exclusive Remedies. The rights and the remedies of the State under this Contract are not exclusive;

9.4. Nonconforming Tender. Materials or Services supplied under this Contract shall fully comply with the Contract. The delivery of Materials or Services or a portion of the Materials or Services that do not fully comply constitutes a breach of contract. On delivery of nonconforming Materials or Services, the State may terminate the Contract for default under applicable termination clauses in the Contract, exercise any of its rights and remedies under the Uniform Commercial Code, or pursue any other right or remedy available to it; and

9.5. Right of Offset. The State shall be entitled to offset against any sums due the Contractor, any expenses or costs incurred by the State, or damages assessed by the State concerning the Contractor's non-conforming performance or failure to perform the Contract, including expenses, costs and damages described in the Uniform Terms and Conditions.

10. Contract Termination

10.1. Cancellation for Conflict of Interest. Pursuant to A.R.S. § 38-511, the State may cancel this Contract within three (3) years after Contract execution without penalty or further obligation if any person significantly involved in initiating, negotiating, securing, drafting or creating the Contract on behalf of the State is or becomes at any time while the Contract or an extension of the Contract is in effect an employee of or a consultant to any other party to this Contract with respect to the subject matter of the Contract. The cancellation shall be effective when the Contractor receives written notice of the cancellation unless the notice specifies a later time. If the Contractor is a political subdivision of the State, it may also cancel this Contract as provided in A.R.S. § 38-511;

10.2. Gratuities. The State may, by written notice, terminate this Contract, in whole or in part, if the State determines that employment or a Gratuity was offered or made by the Contractor or a representative of the Contractor to any officer or employee of the State with the purpose of influencing the outcome of the procurement or securing the Contract, an amendment to the Contract, or favorable treatment concerning the Contract, including the making of any determination or decision about contract performance. The State, in addition to any other rights or remedies, shall be entitled to recover exemplary damages in the amount of three (3) times the value of the Gratuity offered by the Contractor;

10.3. Suspension or Debarment. The State may, by written notice to the Contractor, immediately terminate this Contract if the State determines that the Contractor has been debarred, suspended or otherwise lawfully prohibited from participating in any public procurement activity, including but not limited to, being disapproved as a Subcontractor of any public procurement unit or other governmental body. Submittal of an offer or execution of a contract shall attest that the Contractor is not currently suspended or debarred. If the Contractor becomes suspended or debarred, the Contractor shall immediately notify the State; and

10.4. Termination for Convenience. The State reserves the right to terminate the Contract, in whole or in part at any time when in the best interest of the State, without penalty or recourse. Upon receipt of the written notice, the Contractor shall stop all work, as directed in the notice, notify all Subcontractors of the effective date of the termination and minimize all further costs to the State. In the event of termination under this paragraph, all documents, Data and reports prepared by the Contractor under the Contract shall become the property of and be delivered to the State upon demand. The Contractor shall be entitled to receive just and equitable compensation for work in progress, work completed, and Materials or Services accepted before the effective date of the termination. The cost principles and procedures provided in A.R.S. § 41-2543 and A.A.C. Title 2, Chapter 7, Article 7, shall apply.

10.5. Termination for Default:

10.5.1. In addition to the rights reserved in the Contract, the State may terminate the Contract in whole or in part due to the failure of the Contractor to comply with any term or condition of the Contract, to acquire and maintain all required insurance policies, bonds, licenses and permits, or to make satisfactory progress in performing the Contract. The Procurement Officer shall provide written notice of the termination and the reasons for it to the Contractor,

10.5.2. Upon termination under this paragraph, all goods, Materials, documents, Data, and reports prepared by the Contractor under the Contract shall become the property of and be delivered to the State on demand, and

10.5.3. The State may, upon termination of this Contract, procure, on terms and in the manner that it deems appropriate, Materials or Services to replace those under this Contract. The Contractor shall be liable to the State for any excess costs incurred by the State in procuring Materials or Services in substitution for those due from the Contractor.

10.6. Continuation of Performance Through Termination. The Contractor shall continue to perform, in accordance with the requirements of the Contract, up to the date of termination, as directed in the

termination notice.

11. Contract Claims

All contract claims or controversies under this Contract shall be resolved according to A.R.S. Title 41, Chapter 23, Article 9, and rules adopted thereunder.

12. Arbitration

The parties to this Contract agree to resolve all disputes arising out of or relating to this Contract through arbitration, after exhausting applicable administrative review, to the extent required by A.R.S. § 12-1518, except as may be required by other applicable statutes (A.R.S. Title 41).

13. Communication

13.1. Program Report. When reports are required by the Contract, the Contractor shall provide them in the format approved by ADHS; and

13.2. Information and Coordination. The State will provide information to the Contractor pertaining to activities that affect the Contractor's delivery of services, and the Contractor shall be responsible for coordinating their activities with the State's in such a manner as not to conflict or unnecessarily duplicate the State's activities. As the work of the Contractor progresses, advice and information on matters covered by the Contract shall be made available by the Contractor to the State throughout the effective period of the Contract.

14. Client Grievances

If applicable, the Contractor and its subcontractors shall use a procedure through which clients may present grievances about the operation of the program that result in the denial, suspension or reduction of services provided pursuant to this Contract and which is acceptable to and approved by the State.

15. Sovereign Immunity

Pursuant to A.R.S. § 41-621(O), the obtaining of insurance by the State shall not be a waiver of any sovereign immunity defense in the event of suit.

16. Administrative Changes

The Procurement Officer, or authorized designee, reserves the right to correct any obvious clerical, typographical or grammatical errors, as well as errors in party contact information (collectively, "Administrative Changes"), prior to or after the final execution of a Contract or Contract Amendment. Administrative Changes subject to permissible corrections include: misspellings, grammar errors, incorrect addresses, incorrect Contract Amendment numbers, pagination and citation errors, mistakes in the labeling of the rate as either extended or unit, and calendar date errors that are illogical due to typographical error. The Procurement Office shall subsequently send to the Contractor notice of corrections to administrative errors in a written confirmation letter with a copy of the corrected Administrative Change attached.

17. Health Insurance Portability and Accountability Act of 1996 (HIPAA)

17.1. The Contractor warrants that it is familiar with the requirements of HIPAA, as amended by the Health Information Technology for Economic and Clinical Health Act (HITECH Act) of 2009, and accompanying regulations and will comply with all applicable HIPAA requirements in the course of this Contract. Contractor warrants that it will cooperate with the Arizona Department of Health Services (ADHS) in the course of performance of the Contract so that both ADHS and Contractor will be in compliance with HIPAA, including cooperation and coordination with the Arizona Department of Administration-Arizona Strategic Enterprise

Technology (ADOA-ASET) Office, the ADOA-ASET Arizona State Chief Information Security Officer and HIPAA Coordinator and other compliance officials required by HIPAA and its regulations. Contractor will sign any documents that are reasonably necessary to keep ADHS and Contractor in compliance with HIPAA, including, but not limited to, business associate agreements; and

17.2. If requested by the ADHS Procurement Office, Contractor agrees to sign a "Pledge To Protect Confidential Information" and to abide by the statements addressing the creation, use and disclosure of confidential information, including information designated as protected health information and all other confidential or sensitive information as defined in policy. In addition, if requested, Contractor agrees to attend or participate in HIPAA training offered by ADHS or to provide written verification that the Contractor has attended or participated in job related HIPAA training that is: (1) intended to make the Contractor proficient in HIPAA for purposes of performing the services required and (2) presented by a HIPAA Privacy Officer or other person or program knowledgeable and experienced in HIPAA and who has been approved by the ADOA-ASET Arizona State Chief Information Security Officer and HIPAA Coordinator.

18. Fraud, Waste, or Abuse

18.1. ADHS requires all employees to abide by the State's Personnel System Rules, R2-5A-501; Standards of Conduct which includes maintaining high standards of honesty, integrity, and impartiality, free from personal considerations and/or favoritism, and Code of Conduct for individuals engaged in Accounting, Financial and Budgeting Activities which depicts the moral, ethical, legal and professional aspects of personal conduct. ADHS requires the same conduct of its consultants, vendors, contractors, subrecipients, or persons doing business with the agency;

18.2. Any State employee, consultant, vendor, contractor or subrecipient or person doing business with the Agency who receives a report of improper activity must report the information within one (1) business day. Note: Federal Award policy denotes awardees must disclose, in a timely manner, in writing to ADHS all violations of Federal Criminal Law, involving fraud, bribery, or gratuity violations potentially affecting Federal Awards; and

18.3. Anyone suspecting Fraud, Waste, or Abuse related to ADHS activities are required to report Fraud, Waste, or abuse through any of the following reporting channels:

18.3.1. ADHS Ethics Action Hotline at (602) 542-2347,

18.3.2. ADHS Ethics Action Email at reportethics@azdhs.gov ,or

18.3.3. General Accounting Office (GAO) Fraud Reporting Email at reportfraud@azdoa.gov to report Fraud, Waste, or Abuse incidents.

19. Unique Entity Identifier (UEI) Requirement

Pursuant to 2 CFR 25.100 et seq., no entity (defined as a Governmental organization, which is a State, local government, or Indian tribe; foreign public entity; domestic or foreign nonprofit organization; domestic or foreign for-profit organization; or Federal agency, but only as a sub-recipient under an award or sub-award to a non-Federal entity) may receive a sub-award from ADHS unless the entity provides its Unique Entity Identifier Number to ADHS. The number can be created in SAM.gov. If already registered the UEI has been assigned and can be viewed in SAM.gov.

20. The Federal Funding Accountability and Transparency Act (FFATA or Transparency Act - P.L.109-282, as amended by section 6202(a) of P.L. 110-252), found at https://www.fsrs.gov/

If applicable, the subrecipient or sub-awardee is required to abide by the Federal Funding Accountability and Transparency Act (FFATA or Transparency Act – P.L. 109-282, as amended by section 6202(a) of P.L. 110-252), found at https://www.fsrs.gov/. The associated Grant Reporting Certification Form and completion instructions will

be sent to the subrecipient from ADHS Program(s) responsible for the specific contract. The subrecipient or sub-awardee must return the completed form to ADHS Program(s) by the 15th of the month following that in which the award was received. Failure to complete a required Grant Reporting Certification Form may result in loss of funding.

21. Technology Replacement

In any event where product is discontinued, no longer available or technically inferior to newly developed product, the Contractor shall provide an equivalent replacement model at no additional cost and shall honor the original contract terms

22. Authorization for Provision of Services

Authorization for purchase of services under this Agreement shall be made only upon ADHS issuance of a Purchase Order that is signed by an authorized agent. The Purchase Order will indicate the Agreement number and the dollar amount of the funds authorized. The Contractor shall only be authorized to perform services up to the amount of the Purchase Order. ADHS shall not have any legal obligation to pay for services in excess of the amount indicated on the Purchase Order. No further obligation for payment shall exist on behalf of ADHS unless 2) the Purchase Order is changed or modified with an official ADHS Procurement Change Order, and/or an additional Purchase Order is issued for purchase of services under this Agreement.

Additional Terms and Conditions for Title 2, Subtitle A, Chapter II, Part 200, Subpart C: §200.201 USE OF GRANT AGREEMENTS (INCLUDING FIXED AMOUNT AWARDS), COOPERATIVE AGREEMENTS AND CONTRACT

23. Civil Rights Assurance Statement.

The Contractor and Subcontractors are subject to Title VI of the Civil Rights Act of 1964, Section 504 of Rehabilitation Act of 1973, Title II of the Americans with Disabilities Act of 1990, the Age Discrimination Act of 1975, Title IX of the Education Amendment of 1972, and offers all persons the opportunity to participate in programs or activities regardless or race, color, national origin, age, sex, or disability. Further, it is agreed that no individual will be turned away from or otherwise denied access to or benefit from any program or activity that is directly associated with a program of the RECIPIENT on the basis of race, color, national origin, age, sex (in educational activities) or disability.

24. Americans With Disabilities Act of 1990.

24.1. The Contractor shall comply with the Americans With Disabilities Act of 1990 (Public Law 101-336) and the Arizona Disability Act of 1992 (A.R.S § 41-1492 et. seq.), which prohibits discrimination of the basis of physical or mental disabilities in delivering contract services or in the employment, or advancement in employment of qualified individuals; and

24.2. Persons with a disability may request a reasonable accommodation, such as a sign language interpreter, by contracting the Contract Manager for the Contract. Request should be made as early as possible to allow time to arrange the accommodation.

25. Federal Funding. Funding for these services is contingent upon the availability of federal government funding. No commitment of any kind is made by the State concerning this Grant unless there are monies provided by a federal grant. The Grantee should take this fact into consideration.

25.1. For the purposes of this Grant, a capital expenditure means expenditures to acquire capital assets, as defined in 2 C.F.R. 200.12, or expenditures to make additions, improvements, modifications, replacements, rearrangements, reinstallations, renovations, or alterations to capital assets that materially increase their value or useful life, with a cost of $250 or greater;

25.2. Grantee agrees to maintain property records for equipment purchased with grant funds and perform a physical inventory and reconciliation with property records at least every year. Grantee agrees that funds

will not be used for the construction of new facilities;

25.3. Grantee agrees to follow equipment disposition policies as determined by the Federal Awarding Agency at Award Completion or as depicted in the State of Arizona Accounting Manual. Grantee also agrees to follow the directives in ADHS Property and Procedure Policy FIN 111;

25.4. Charges to Federal awards for salaries and wages must be based on records that accurately reflect the work performed. These records must: Be supported by a system of internal control which provides reasonable assurance that the charges are accurate, allowable, and properly allocated; Be incorporated into the official records of the non-Federal entity; Reasonably reflect the total activity for which the employee is compensated by the non-Federal entity, not exceeding 100% of compensated activities (for IHE, this per the IHE's definition of IBS); Encompass both federally assisted and all other activities compensated by the non-Federal entity on an integrated basis, but may include the use of subsidiary records as defined in the non-Federal entity's written policy; Comply with the established accounting policies and practices of the non-Federal entity (See paragraph above for treatment of incidental work for IHEs.; and Support the distribution of the employee's salary or wages among specific activities or cost objectives if the employee works on more than one (1) Federal award; a Federal award and non-Federal award; an indirect cost activity and a direct cost activity; two (2) or more indirect activities which are allocated using different allocation bases; or an unallowable activity and a direct or indirect cost activity. Budget estimates (i.e., estimates determined before the services are performed) alone do not qualify as support for charges to Federal awards, but may be used for interim accounting purposes only;

25.5. Grantee understands that financial reports are required as an accounting of expenditures for either reimbursement or ADHS-approved advance payments;

25.6. The final request for reimbursement of grant funds must be received by the ADHS no later than sixty (60) days after the last day of the award period;

25.7. All goods and services must be received or have reasonable expectations thereof and placed in service by Grantee by the expiration of this award;

25.8. Grantee agrees that all encumbered funds must be expended and that goods and services must be paid by GRANTEE within sixty (60) days of the expiration of this award unless funding guidelines permit funds to be used at a future date;

25.9. Grantee agrees to remit all unexpended grant funds to the ADHS within thirty (30) days of written request from the ADHS;

25.10. Grantee agrees to account for interest earned on federal grant funds and shall manage interest income in accordance with the Cash Management Improvement Act of 1990 and as indicated in the State of Arizona Accounting Manual (SAAM) located at the following website. https://gao.az.gov/publications/saam Interest earned in excess of allowable limits must be remitted to the ADHS within thirty (30) days after receipt of a written request from the ADHS;

25.11. Grantee agrees not to use grant funds for food and/or beverage unless explicitly approved in writing by the ADHS;

25.12. Grantee agrees to comply with all applicable laws, regulations, policies and guidance (including specific cost limits, prior approvals and reporting requirements, where applicable) governing the use of grant funds for expenses related to conferences, meetings, trainings, and other events, including the provision of food and/or beverages at such events, and costs of attendance at such events unless explicitly approved in writing by the ADHS;

25.13. No funds shall be used to supplant federal, state, county or local funds that would otherwise be made available for such purposes. Supplanting means the deliberate reduction of state or local funds because

of the existence of any grant funds;

25.14. Grantee agrees that grant funds are not to be expended for any indirect costs that may be incurred by Grantee for administering these funds unless explicitly approved in writing by the ADHS. This may include, but is not limited to, costs for services such as accounting, payroll, data processing, purchasing, personnel, and building use which may have been incurred by the Grantee;

25.15. Grantee will comply with the audit requirements of *OMB* Office of Management and Budget's (OMB) Uniform Administrative Requirements, Cost Principles and Audit Requirement for Federal Awards and provide the ADHS with the Single Audit Report and any findings within ninety (90) days of receipt of such finding(s). If the report contains no findings, the Grantee must provide notification that the audit was completed. All completed Single Audits should be uploaded in the format specified to the Federal Audit Clearinghouse no later than nine (9) months after the entities fiscal year-end at the attached **Link**: https://harvester.census.gov/facweb/default.aspx/;

25.16. Grantee understands and agrees that misuse of award funds may result in a range of penalties, including suspension of current and future funds, suspension or debarment from federal grants, recoupment of monies provided under an award, and civil and/or criminal penalties;

25.17. Grantee agrees not to do business with any individual, agency, company or corporation listed in the Excluded Parties Listing Service.

Link: *System for Award Management* https://www.sam.gov/portal/public/SAM/;

25.18. Grantee agrees to ensure that, no later than the due date of the Grantee's first financial report after the award is made, Grantee and any subgrantees have a valid UEI profile and active registration with the System for Award Management (SAM) database;

25.19. GRANTEE certifies that it presently has no financial interest and shall not acquire any financial interest, direct or indirect, which would conflict in any manner or degree with the performance of services required under this Agreement;

25.20. Compliance with 41 U.S.C. 4712 (including prohibitions on reprisal; notice to employees) Grantee must comply with, and is subject to, all applicable provisions of 41 U.S.C. 4712, including all applicable provisions that prohibit, under specified circumstances, discrimination against an employee as reprisal for the employee's disclosure of information related to gross mismanagement of a federal grant, a gross waste of federal funds, an abuse of authority relating to a federal grant, a substantial and specific danger to public health or safety, or a violation of law, rule, or regulation related to a federal grant; and

25.21. GRANTEE certifies to comply with the Drug-Free Workplace Act of 1988, and implemented in 28 CFR Part 83, Subpart F, for grantees, as defined in 28 CFR, Part 83 Sections 83.620 and 83.650.

26. Comments Welcome

The ADHS Procurement Office periodically reviews the Uniform Terms and Conditions and welcomes any comments you may have. Please submit your comments to: ADHS Procurement Administrator, Arizona Department of Health Services, 150 North 18th Avenue, Suite 530, Phoenix, Arizona 85007.

1. Background

1.1. 2021 Arizona statistics demonstrate an ongoing Sexually Transmitted Disease (STI) syndemic: The State of Arizona reported 41,514 cases of chlamydia (CT), 18,443 cases of gonorrhea (GC), and 3,456 cases of syphilis. Furthermore, in September 2018, ADHS declared the first statewide outbreak of syphilis in women and babies. Of the reported 2021 cases, Pinal County accounted for 1,783 CT cases, 738 GC cases, and 102 syphilis cases.

1.2. To address this syndemic, Pinal County Public Health Department (Contractor) and ADHS must build upon the current infrastructure that provides surveillance, epidemiology, disease investigation, prevention, policy and communication to expand and identify new interventions including:

1.2.1. Screening and treatment,

1.2.2. Partner services,

1.2.3. Outreach,

1.2.4. Community collaborations,

1.2.5. Linkage to care, and

1.2.6. Health promotions that address the target populations and geographical areas of high prevalence in Pinal County.

1.3. The changing health care landscape and information technology advances present opportunities and challenges to improve STI prevention programs. The public health landscape is shifting from direct individual patient care and individual-level interventions to population health.

2. Objective

In accordance with the cooperative agreement with the Center for Disease Control and Prevention (CDC) Strengthening Sexually Transmitted Disease Prevention and Control for Health Departments (STI PCHD) Grant number CDC-RFA-PS19-1901 (https://www.cdc.gov/std/funding/pchd/default.htm), the objective is to assure the prevention and control of STIs by supporting and improving the capacity of Contractor to:

2.1. Prevent and control the incidence of CT, GC, and syphilis;

2.2. Eliminate congenital syphilis;

2.3. Reduce primary and secondary syphilis;

2.4. Prevent antibiotic resistant gonorrhea;

2.5. Effectively respond to STI-related outbreaks;

2.6. Prevent STI-related reproductive health problems;

2.7. Reduce STI-related health disparities;

2.8. Improve surveillance capacity;

2.9. Provide appropriate treatment and linkage to care for persons infected with STIs and their partners;

2.10. Promote CDC-recommended screening, diagnosis and treatment;

2.11. Disseminate local data to the healthcare community and general public;

2.12. Monitor and develop STI-related policy;

2.13. Develop and strengthen partnerships to support STI prevention and control;

2.14. Support Human Immunodeficiency Virus (HIV) prevention goals; and

2.15. Analyze and use data for increased program insight and development.

3. Scope of Services

The Contractor shall:

3.1. In addition to the reporting, prevention and control measures stated in the Arizona Revised Statutes, Title 9, Chapter 6, Articles 1 through 11, the Contractor will build upon the current infrastructure that provides surveillance, epidemiology, disease investigation, prevention, policy and communication to expand and identify new interventions that include: screening and treatment, partner services, outreach, community collaborations, linkage to care, and health promotions that address the target populations and geographical areas of high prevalence in Pinal County;

3.2. Collaborate with ADHS STI Control Epidemiologists and other community stakeholders to identify and conduct community outreach and activities to educate and screen high risk populations; and

3.3. Conduct patient care and partner services in accordance with the current CDC STI Treatment Guidelines and STI Program Operations Guide which can be found here and updates as published in the Morbidity and Mortality Weekly Report (MMWR), available at www.cdc.gov/STI.

4. Tasks

The Contractor shall:

4.1. Within thirty (30) days of executed agreement and in collaboration with the ADHS STI CONTROL develop a five (5) year Work Plan for 2024-2028 to meet the required activities as noted in section 3.2, and in accordance with the CDC-approved Work Plan for Arizona. It is highly recommended that the Contractor use ADHS provided templates. In this work plan, the contract shall describe strategies and metrics related to the following areas;

4.1.1. **Surveillance**

4.1.1.1. Increase the percent of STI records with complete data for key epidemiological fields; and

4.1.1.2. Increase the percent of STI records dispositioned within thirty (30) days.

4.1.2. **Disease Investigation and Intervention**

4.1.2.1. Increase the percent (%) of early syphilis cases that have at least one (1) partner treated in thirty (30) days of initial test; and

4.1.2.2. Increase the percent (%) of syphilis cases that are screened for HIV/AIDS within thirty (30) days of initial syphilis test.

4.1.3. **Promote CDC-recommended screening, diagnosis, and treatment**

4.1.3.1. Increase the proportion of target populations (youth, men who have sex with other men, and women of childbearing age) who receive at least annual STI screening; and

4.1.3.2. Reduce the percent of gonorrhea cases that receive non-CDC recommended treatment.

4.1.4. **Promote STI prevention and policy**

4.1.4.1. Improve health department policies for STI prevention by using data to inform policy change and development.

4.1.5. **Analyze and use data for program improvement**

4.1.5.1. Improve surveillance efficiency through automation to increase the frequency of layered analysis by core epidemiological variables; and

4.1.5.2. Utilize surveillance data to inform resource allocation.

4.2. From years 2024 through 2028, submit a six (6) month and annual progress report. These reports should build upon the five (5) year work plan. It is recommended that the Contractor use the ADHS provided templates.

The Contractor shall:

4.2.1. Review timeliness of case disposition canned report in Patient Reporting Investigation Surveillance Manager (PRISM) at least twice annually and include this metric in the semiannual report to ADHS STI CONTROL.

4.2.2. If Contractor has fewer than seventy percent (70%) of syphilis cases dispositioned in thirty (30) days, then they shall include strategies to improve this metric in semi-annual/annual work plan.

4.2.3. Include activities and metrics for promoting quality STI care in the STI Specialty Clinics on their semi-annual/annual work plans.

4.2.4. Submit lists of STI Specialty Clinics in their semi-annual/annual work plan.

4.2.5. Include provider education metrics in their semi-annual/annual work plan (e.g., number/type of providers educated, scope of education, number of training events, etc.).

4.2.6. Include activities to improve STI screening in men who have sex with men in their semi-annual/annual work plans and metrics to monitor progress in this area.

4.2.7. Include percent positivity for all screening conducted using RFA-PS19-1901 funds.

4.2.8. Include strategies for improving data security in their work plan if gaps are identified in the data security and confidentiality checklist.

4.2.9. If Contractor is not on track to spend down funds by July 31st, Contractor should also include a spend-down plan in their semi-annual report.

4.2.10. Notify ADHS of any staffing changes and/or submit a current staff roster of positions funded under this work that includes the name of the team member and the percent of their time that is funded for this work,

4.2.11. Indicate the current training status for each funded team member.

4.3. Utilize the comprehensive database, PRISM, for state-mandated STI reporting and complete the following activities to assure accurate data entry, and quality surveillance activities.

4.3.1. Ensure that staff using PRISM access adhere to the current PRISM Policies and Procedures, and

4.3.2. Ensure that staff using PRISM attends at least two (2) quarterly PRISM meetings and receive the slides and attachments from any missed meetings.

4.4. Adhere to the most current version of the ADHS reactor grid for case prioritization. **Syphilis cases are the highest priority for case investigation and partner services.** Contractor may request to opt out of certain activities related to gonorrhea/chlamydia investigations in their work plans, if such activities are limiting capacity to provide timely and appropriate disease intervention services to syphilis cases. Request must be noted and justified in the workplan and approved by the ADHS STI Control Office Chief.

4.5. The Contractor shall:

4.5.1. Conduct prompt case management activities including field investigations, internet-based partner notification, patient interviews and case closure for patients diagnosed with early, primary, and secondary syphilis per CDC program standards and the ADHS checklist,

4.5.2. Initiate case investigation within one (1) business day of notification for syphilis cases that meet one (1) or more of the following criteria:

4.5.2.1. Pregnant female.

4.5.2.2. Possible congenital case.

4.5.2.3. Female under the age of forty-five (45).

4.5.3. Initiate case investigation within three (3) business days of notification for syphilis cases that meet one (1) or more of the following criteria:

4.5.3.1. Titer>= 1:8.

4.5.3.2. Contact to a primary, secondary, or early case (denoted as T4 in PRISM).

4.5.4. Prioritize pregnant syphilis case investigations by following-up with partner(s), prenatal care providers, birthing centers, and neonatal care providers as needed to ensure adequate maternal treatment and education to prevent reinfection.

4.5.5. Complete thorough investigation of all congenital syphilis cases, and note any possible missed opportunities for prevention in PRISM. This information is also required for babies that are determined to not be a congenital syphilis case.

4.5.6. Prioritize syphilis cases occurring in women of childbearing age for partner services to verify staging and treatment, obtain pregnancy status, elicit partners, and collect other relevant risk factors and submit case information within thirty (30) days of notification.

4.5.7. Prioritize cases of syphilis in persons with a titer >= 1:8 for partner services to verify staging and treatment, elicit partners, and collect other relevant risk factors and case information within thirty (30) days of notification.

4.5.8. Prioritize case investigation of contacts (cases marked as T4 in PRISM) of pregnant, primary, secondary, and/or suspect early, syphilis cases for testing, treatment (or epi-treatment if initially negative), staging (if positive), partner elicitation, risk factors, etc. within thirty (30) days of notification of original patient. This applies to contacts identified by other jurisdictions.

4.5.9. Ensure appropriate treatment and follow-up with partners of primary, secondary, and suspected early cases of syphilis within thirty (30) days of notification of original patient.

4.5.10. For syphilis cases that occur on tribal lands, Contractor shall work directly with the tribe, where possible, to coordinate case investigation and follow-up activities.

4.5.11. Provide education to any provider failing to appropriately screen for congenital syphilis.

4.5.12. Shall be receptive to ADHS regional investigation support if they are unable to meet investigation timeframes.

4.6. Provide accurate entry of all state mandated information on laboratory and Communicable Disease Reports and Laboratory Reports for *Treponema pallidum* (syphilis), *Neisseria gonorrhea, Chlamydia trachomatis,* and *Haemophilus ducrey* (chancroid).

4.6.1. Complete required training for data entry staff, epidemiologists, disease investigators, reporters and their supervisors. At minimum, STI disease investigators, epidemiologists, and public health nurses working with STI data should complete the modules available on learnpartnerservices.org within thirty (30) days of hire and should attend at least two (2) quarterly PRISM trainings a year and receive the materials for any quarterly trainings they miss.

4.6.2. Follow up with reporting physicians to obtain missing data, particularly for fields that require: birthdate, gender, pregnancy status, HIV status, treatment given, staging (if syphilis), patient address, provider information and specimen source.

4.6.3. Enter all Communicable Disease Reports into PRISM his includes reports for cases that occur on tribal lands if the Tribe does not have access to PRISM. Tribes with PRISM access are expected to enter their own CDRs.

4.6.3.1. Contractor may request assistance with CDR entry for tribal cases from ADHS. Assistance must be approved by the ADHS STI Control Office Chief.

4.7. Reduce the threat of antibiotic resistance by providing CDC Treatment Guidelines to physicians that are flagged as consistently failing to treat gonorrhea according to these guidelines.

4.8. Annually review data security by using the CDC Data Security and Confidentiality Guidelines available here: https://www.cdc.gov/nchhstp/programintegration/docs/pcsidatasecurityguidelines.pdf, to identify program gaps (if any). If gaps are identified, the contractor shall include strategies for improving security and confidentiality on the semi-annual and annual progress reports.

4.9. Conduct priority investigations and partner service delivery on HIV co-infected individuals and insuring these clients are enrolled in care services.

4.10. Ensure that persons rectally positive for gonorrhea are screened for HIV and syphilis.

4.11. Contractor shall use ADHS reports and canned PRISM reports to inform resource allocation and other program planning efforts.

4.12. Ensure 340B Drug Pricing Program integrity and maintain accurate records documenting compliance with all 340B Program requirements.

5. Requirements

Contractor shall:

5.1. Have internet access to the ADHS Portal where PRISM resides and training webinars are held.

5.2. Abide by all HIPAA guidelines and CDC's Data Security and Confidentiality Guidelines.

5.3. Abide by all PRISM Data Use agreements.

5.4. Consult ADHS STI CONTROL before pursuing publication of PRISM data.

5.5. Submit any budget changes on or before July 15th to ensure timely approval of changes and timely approval of the required annual grant close out.

5.6. Submit all reports described in this contract.

5.7. Ensure that new staff conducting STI case investigations complete the training modules available on CDC Train within thirty (30) days of hire. Proof of training completion shall be required for staff who are at least partially funded by RFA-PS-19-1901 and submitted along with the monthly CER for new staff.

5.8. Ensure that all staff complete an annual cultural humility training, which may include coverage of topics such cultural competency, implicit bias, cultural diversity and inclusion.

5.9. Participate in an annual meeting with the STI Control Office to discuss the grant and any challenges that may have arisen during the year. The meeting will also provide staffing updates and an opportunity to identify areas of support.

6. Funding Restrictions

6.1. Funds may only be used for reasonable program purposes (personnel, travel, supplies, and services).

6.2. Funds cannot be used for:

6.2.1. Research.

6.2.2. Furniture.

6.2.3. HIV Pre-exposure Prophylaxis (PrEP) medications or family planning medications.

6.2.4. Clinical services (unless otherwise noted, see 6.4).

6.2.5. Publicity or propaganda for the preparation, distribution, or use of any material designed to support or defeat the enactment of legislation before any legislative body.

6.2.6. The salary or expenses of any grant or contract recipient, or agent acting for such recipient, related to any activity designed to influence the enactment of legislation, appropriations, regulation, administrative action, or executive Order proposed or pending before any legislative body.

6.3. STI-related HIV prevention activities can be conducted under this IGA; however, they should not exceed ten percent (10%) of program effort and allocation.

6.4. No more than ten percent (10%) of the total award can be used for safety-net STI clinical preventive services provided the contractor can document ability to provide safety-net SD services as per CDC guidance.

6.4.1. If a majority or all funds are used on clinical services, counties are still expected to adhere to the investigation timeframes outlined in their full contract.

6.5. Personnel funds shall only be used for staff conducting STI investigation, partner services, STI data entry, STI analysis, or contributing to any of the other deliverables outlined in this Contract.

6.6. Although it would be allowable to fund/partially fund administrative and supervisory staff, personnel funds should be prioritized for syphilis case investigation. If a jurisdiction does not have capacity to investigate their syphilis cases, it would not be allowable to use this funding to cover non-investigation staff. Similarly, these funds cannot be used for clinicians unless they are funding the time clinical staff are spending on STI investigation work (i.e., a public health nurse who conducts partner services could be funded for the time they spend on STI investigations and contact tracing. Contractor shall prioritize personnel funds to ensure adequate capacity for conducting syphilis disease investigation before allocating personnel funds for other STI prevention related activities.

9. Reference Documents

9.1. *Internet Guidelines for Online STI Prevention and Communication* – available at http://www.cdc.gov/STI/program/.

9.2. *Recommendations for Partner Services Programs for HIV Infection, Syphilis, Gonorrhea, and Chlamydia Infection.*

9.3. CDC's Data Security and Confidentiality.

9.4. Guidelines: http://www.cdc.gov/nchhstp/programintegration/docs/PCSIDataSecurityGuidelines.pdf.

9.5. CDC Treatment Guidelines.

10. State Provided Items

10.1. ADHS will provide an annual security and confidentiality training during at least one (1) PRISM quarterly webinar.

10.2. ADHS will provide local data reports to inform program planning.

10.2.1. The Contractor may request additional data from ADHS by emailing prism.helpdesk@azdhs.gov to inform program planning. It is recommended that the contractor allow for a minimum of two (2) weeks for the development of customized reports.

10.3. ADHS will maintain and manage the data system, PRISM. This includes acting as the liaison between the developer and the county.

10.3.1. ADHS will perform bi-monthly edit checks and quality assurance review.

10.3.2. ADHS will maintain PRISM through regular system updates as provided by the developer and required by CDC.

10.3.3. ADHS will provide technical support for the use of PRISM.

10.3.4. ADHS will monitor the helpdesk requests in PRISM daily.

10.3.5. ADHS will monitor the PRISM helpdesk email (prism.helpdesk@azdhs.gov) daily for all other requests.

10.3.6. ADHS will provide quarterly PRISM trainings and release materials to all invitees.

10.4. ADHS will provide epidemiology and technical support with respect to syphilis case investigation.

10.5. ADHS will coordinate Provider trainings by working with the State Medical Director and California Prevention Training Center, as is required by the CDC grant.

11. Reporting Requirements/Deliverables and Schedule

The Contractor Shall:

11.1. Within thirty (30) days of executed Agreement the Contractor shall submit a five (5) year work plan for 2024-2028 to meet the required activities as noted in Section 3.3 and in accordance with the CDC-approved Work Plan for Arizona.

11.2. Submit a six (6) month progress report by July 31st, each year of the grant cycle (2024-2028) to summarize progress toward the five (5) year work plan.

11.3. Submit an annual data security and confidentiality checklist when there are changes and a new checklist every five (5) years even if there are no changes. If gaps in data security and confidentiality are identified on the checklist then additional strategies to address these gaps should be identified on the annual progress report.

11.4. Submit an annual progress report by January 31st, each year of the grant cycle (2024-2028) to summarize progress toward the five (5) year work plan.

11.5. Submit an annual itemized budget by January 31st, each year of the grant cycle (2024-2028).

11.6. Contractor's Expenditure Report that includes a summary of all positions, filled or vacant, with the breakdown of associated costs incurred with each position should be submitted monthly and shall not exceed the total budget.

11.6.1. Staff that are at least partially funded by this IGA are required to complete the modules available at CDC Train within thirty (30) days of hire and proof of completion should be submitted along with the CER for any new staff.

11.7. Reports Schedule

Report	Time Period	Due to ADHS
5-year work plan	January 1, 2024 - December 31, 2028	Thirty (30) Days upon execution of IGA. This is a one (1) time report.
Six (6) month progress report	January 1 - June 30	This report shall be submitted annually on July 31st. The first six (6) month progress report will be due July 31st, 2024.

Data Security and Confidentiality Checklist	January 1 - December 31	This checklist should be submitted annually by January 31st along with the Annual Progress Report. If gaps in data security and confidentiality are identified then strategies for improving data security should be noted on the Annual Progress Report.
Annual progress report	January 1 - December 31	This report shall be submitted annually on January 31st to summarize the work of the previous year. The first annual progress report will be due January 31st, 2025.
Annual itemized budget	January 1 - December 31	The budget shall be submitted annually on January 31st. The first budget shall be due January 31st, 2024.
Monthly CER's and Finance Reports	Monthly	Thirty (30) days after the end of the month.

12. Notices, Correspondence, and Reports

12.1. Notices, correspondence, reports and invoices/CERs from the Contractor to ADHS shall be sent to:

Meagan Surgenor, MHA
STIC Initiatives Manager
Bureau of Infectious Diseases and Services
Arizona Department of Health Services
150 North 18th Ave, Suite 280 Phoenix, AZ 85007
Mobile 480-407-9854
Email Meagan.Surgenor@azdhs.gov

12.2. Notices, correspondence, and reports (and payments if sent to same address) from ADHS to the Contractor shall be sent to:

Pinal County Public Health Department
ATTN: Anela Arciga, Finance Manager
971 N. Jason Lopez Circle, Bldg D, P.O. Box 2945
Florence, AZ 85132-2945
Phone: 520-866-7304
Email: anela.arciga@pinal.gov

Price Sheet

Pinal County Public Health Department

January 1, 2024, through December 31, 2024

COST REIMBURSEMENT LINE ITEMS	BUDGETED AMOUNT
PERSONNEL SERVICES *	$ 54,167.00
EMPLOYEE RELATED EXPENSES (ERE) *	$ 22,425.00
PROFESSIONAL & OUTSIDE SERVICES	$
TRAVEL *	$ 3,456.00
SUPPLIES *	$ 1,948.00
OTHER OPERATING *	$ 1,154.00
CAPITAL OUTLAY EXPENSES	$
OTHER	$
TOTAL ANNUAL NOT TO EXCEED AMOUNT	**$ 83,150.00**

*Indicates Indirect costs calculation

NOTES: With prior written approval from the STI Control Office Chief, PCPHD is authorized to transfer up to a maximum of thirty percent (30%) of the total budget amount between line items. Transfers of funds are only allowed between funded line items. Transfers exceeding thirty percent (30%) or to a non-funded item shall require a written amendment.

This budget is contingent on funding and is subject to potential changes in subsequent years.

Exhibit - 2 CFR 200.332	
§ 200.332	
Prime Awardee:	**Arizona Department of Health Services**
UEI #	**QMWUG1AMYF65**
Federal Award Identification (Grant Number):	6 NH25PS005157-05-02
Subrecipient name (which must match the name associated with its unique entity identifier):	Pinal County
Subrecipient's unique entity identifier (UEI #):	
Federal Award Identification Number (FAIN, sometimes it's the same as the Grant Number):	NH25PS005157
Federal Award Date (see the definition of Federal award date in § 200.1 of this part) of award to the recipient by the Federal agency;	4/1/2023
Subaward Period of Performance Start and End Date;	1/1/19-12/31/23
Subaward Budget Period Start and End Date:	1/1/23-12/31/23
Amount of Federal Funds Obligated by this action by the pass-through entity to the subrecipient (this is normally the contract amount):	$83,150.00
Total Amount of Federal Funds Obligated to the subrecipient by the pass-through entity including the current financial obligation (how much is available for contracts):	$83,150.00
Total Amount of the Federal Award committed to the subrecipient by the pass-through entity	$83,150.00
Federal award project description, as required to be responsive to the Federal Funding Accountability and Transparency Act (FFATA)	Strengthening Sexually Transmitted Disease Prevention and Control in AZ
Name of Federal awarding agency, pass-through entity, and contact information for awarding official of the Pass-through entity	Centers for Disease Control and Prevention
Assistance Listings number and Title; the pass-through entity must identify the dollar amount made available under each Federal award and the Assistance Listings Number at time of disbursement:	93.977 Preventive Health Services_Sexually Transmitted Diseases Control Grants
Identification of whether the award is R&D	No
Indirect cost rate for the Federal award (including the de minimis rate is charged) per § 200.414	N/A

PINAL COUNTY

WIDE OPEN OPPORTUNITY

AGENDA ITEM

March 6, 2024 ADMINISTRATION BUILDING A
FLORENCE, ARIZONA

REQUESTED BY:

Funds #:

Dept. #:

Dept. Name: Clerk of the Board

Director: Natasha Kennedy

BRIEF DESCRIPTION OF AGENDA ITEM AND REQUESTED BOARD ACTION:

Pursuant to A.R.S. 38-431.02, NOTICE IS HEREBY GIVEN, that the public will have physical access to the meeting room at 9:15 AM.

BRIEF DESCRIPTION OF THE FISCAL CONSIDERATIONS AND/OR EXPECTED FISCAL IMPACT OF THIS AGENDA ITEM:

BRIEF DESCRIPTION OF THE EXPECTED PERFORMANCE IMPACT OF THIS AGENDA ITEM:

MOTION:

History

Time	Who	Approval

ATTACHMENTS:

Click to download
No Attachments Available

PINAL COUNTY
WIDE OPEN OPPORTUNITY

AGENDA ITEM

March 6, 2024 ADMINISTRATION BUILDING A
FLORENCE, ARIZONA

REQUESTED BY:

Funds #:

Dept. #:

Dept. Name: Clerk of the Board

Director: Natasha Kennedy

BRIEF DESCRIPTION OF AGENDA ITEM AND REQUESTED BOARD ACTION:

Meeting Notice of Posting

BRIEF DESCRIPTION OF THE FISCAL CONSIDERATIONS AND/OR EXPECTED FISCAL IMPACT OF THIS AGENDA ITEM:

BRIEF DESCRIPTION OF THE EXPECTED PERFORMANCE IMPACT OF THIS AGENDA ITEM:

MOTION:

History

Time	Who	Approval

ATTACHMENTS:

Click to download
Notice of Posting

PINAL COUNTY

WIDE OPEN OPPORTUNITY

MEETING NOTICE OF POSTING

STATE OF ARIZONA

COUNTY OF PINAL

I, Natasha Kennedy, being duly sworn upon her oath, says as follows:

I am the appointed Clerk of the Pinal County Board of Supervisors.

In my position as Clerk of the Board of Supervisors and Board of Directors, I am responsible for posting all Agendas.

Pursuant to A.R.S. 38-431.02 notice is hereby given that the Pinal County Board of Supervisors and Pinal County Board of Directors will hold a Regular meeting on **Wednesday, March 6, 2024 at 9:30 AM** in the Board Hearing Room, 1891 Historic Courthouse, Administrative Complex, located at 135 N. Pinal Street, Florence, Arizona 85132. The public will have physical access to the meeting room at 9:15 AM.

Notice of Possible Recess: The Board may take a Recess around 12:30 PM and the meeting will reconvene around 1:00 PM.

Board Meetings are broadcasted live and the public may access the meeting on the County Website at Pinal.gov under "Meeting Videos."

Board Agendas are available on the County Website at Pinal.gov under "Agendas & Minutes."

At any time during business hours, citizens may reach the Clerk of the Board Office at (520) 866-6068 or via email at **ClerkoftheBoard@pinal.gov** for information about Board meeting participation.

Note: One or more members of the Board may participate in this meeting by telephonic conference call.

I hereby further certify that I caused to be posted this Friday, March 1, 2024, around 11:00 AM the Regular Agenda, Library District Agenda, Public Health Services District Agenda, and Executive Session as follows:

1. A kiosk located outside the front entrance to The Old Historical Courthouse, Administrative Complex Building, 135 North Pinal Street, Florence, Arizona 85132
2. County Website under Agendas & Meetings located at Pinal.gov
3. Emailed the NOVUS Agenda Distribution List and Clerk of the Board Notification Distribution List

IN WITNESS WHEREOF, I have hereunto set my hand and caused to be affixed the Official Pinal County, Arizona Seal this 1st day of March, 2024.

THE SEAL OF PINAL COUNTY ARIZONA 1875

Natasha Kennedy
Clerk of the Board of Supervisors
Pinal County, Arizona

CLERK OF THE BOARD OF SUPERVISORS
1891 Historic Courthouse | 135 North Pinal Street | P.O. Box 827 | Florence, AZ 85132 | **T:** 520-866-6068
www.pinal.gov

PINAL COUNTY
WIDE OPEN OPPORTUNITY

AGENDA ITEM

March 6, 2024 ADMINISTRATION BUILDING A
FLORENCE, ARIZONA

REQUESTED BY:

Funds #: 10

Dept. #:

Dept. Name: Development Services

Director: Brent Billingsley

BRIEF DESCRIPTION OF AGENDA ITEM AND REQUESTED BOARD ACTION:

Public Hearing and discussion/approval/disapproval of case CSR-009-23: Clark Larson, Owner, and Amanda Lauridsen – Precise Sign Co. LLC, applicant/agent, requesting approval of a Comprehensive Sign Package to allow the installation of two (2) monument signs and eight (8) wall signs with a maximum area of 76.66 square feet per sign, on a 1.22± acre parcel in the CB-1 Local Business Zone; tax parcel 104-22-013N (legal on file); situated in a portion of Section 31, Township 2 South, Range 8 East, of the Gila & Salt River Base & Meridian, Pinal County, Arizona, located on the northeast corner of N Gary Rd and W Empire Rd in San Tan Valley. Supervisor District #2. (Patrick Roberts/Brent Billingsley)

BRIEF DESCRIPTION OF THE FISCAL CONSIDERATIONS AND/OR EXPECTED FISCAL IMPACT OF THIS AGENDA ITEM:

BRIEF DESCRIPTION OF THE EXPECTED PERFORMANCE IMPACT OF THIS AGENDA ITEM:

MOTION:

Approve as presented with no stipulations.

History

Time	Who	Approval
2/27/2024 10:04 AM	County Attorney	Yes
2/28/2024 11:28 AM	County Manager	Yes
2/28/2024 3:06 PM	Clerk of the Board	Yes

ATTACHMENTS:

Click to download

- Staff Report
- Staff Presentation

MEETING DATE: MARCH 6, 2024

TO: PINAL COUNTY BOARD OF SUPERVISORS

CASE NO.: CSR-009-23 (GARY SQUARE)

CASE COORDINATOR: PATRICK ROBERTS, SENIOR PLANNER

Executive Summary:

This is a comprehensive sign package to allow installation of two monument signs and eight wall signs with a sign area maximum of 76.66 sq. ft. per sign within a commercial complex. The applicant is pursuing this sign package to provide commercial tenants with larger signs than the sign code currently permits.

If This Request is Approved:

The applicant shall be allowed to request permits to allow 76.66 sq. ft. of signage per business as indicated on the sign plan.

Staff Recommendation/Issues for Consideration/Concern:

Staff recommends approval of this Comprehensive Sign Package as presented in the staff report.

TAX PARCELS: 104-22-013N (Legal on file)

LANDOWNER: Clark Larson

APPLICANT/AGENT: Amanda Lauridsen, Precise Sign Co.

REQUESTED ACTION & PURPOSE: Clark Larson, Owner, Amanda Lauridsen Precise Sign Co. Applicant, requesting approval of a comprehensive sign package to allow the installation of two monument signs and eight wall signs with a square footage of 76.66 square feet per sign. The subject site is located on the Northeast corner of N Gary Road and W Empire Road in San Tan Valley.

LOCATION: The subject sites is at the Northeast corner of N Gary Road and W Empire Rd in San Tan Valley, AZ.

SIGNAGE SIZE: This is a comprehensive sign package request to allow the following:

- M-1 Monument Sign: 22.5 Square feet (Double Sided)
    - Tenant Signage: 2.44 Square feet (Qty. 4) 9.76 Square feet Total.
- M-2 Monument Sign: 22.5 Square feet (Double Sided)
    - Tenant Signs: 2.44 Square feet (Qty. 8) 19.52 Square feet total.

The monument signage proposed within this sign package is compliant with provisions of the sign code.

- T-1A Wall Sign: 76.66 Square feet maximum.
- T-1B Wall Sign: 76.66 Square feet maximum.
- T-2 Wall Sign: 76.66 Square feet maximum.
- T-3 Wall Sign: 76.66 Square feet maximum.
- T-4 Wall Sign: 76.66 Square feet maximum.
- T-5 Wall Sign: 76.66 Square feet maximum.
- T-6A Wall Sign: 76.66 Square feet maximum.
- T-6B Wall Sign: 76.66 Square feet maximum.
    - Wall Signage Total 613.28 Square feet maximum.

SITE: The site is zoned CB-1 (Local Business) and is currently pursuing building permits for commercial spaces including a dental office, and beverage store. The Site Plan Review has already been approved under SPR-018-21. The decision on this comprehensive sign package may impact operations on the site, since without approval permits for signage will be restricted to 48 square feet per business as described in the commercial complex section of the sign code.

ANALYSIS: The comprehensive sign package consists of eight signs with a potential maximum square footage of 613.28 square feet. The proposed sign plan would limit the individual signage to a maximum of 76.66 square feet per wall sign. The standards described in this sign package would also limit the maximum width of any proposed signage to 22’ 11”. The most intensive instance of this requirement would be T-5, which is placed on a tenant frontage offering the least store frontage at 28’ 1”. In this instance, 80% of building frontage width could potentially be occupied, however the signage would still be required to adhere to 76.66 square feet in area. The 80% width does not correlate directly to area, and the established dimensional constraints would ensure that the sign area is much lower than 80% of frontage area.

The site is within a commercial complex, via a shared access drive with the Banner Urgent Care both to the west and south. The proposed signage of 76.66 square feet per sign exceeds the maximum of 48 square feet by over 50%, so the director is required to forward this comprehensive sign package to the Board of Supervisors with a recommendation from the comprehensive sign committee. At 76.66 square feet per sign, the request for increase is an approximately 60% increase to area.

The Sign Review Committee has forwarded a recommendation of approval. On February 27th, 2024, the committee voted 2-1 for approval. The owner previously initiated tenant leases for his commercial spaces without prior knowledge of the required timeframes for approval of a

Comprehensive Sign Package. Upon application for the CSR, a constraint was discovered whereby opening of his business may occur before sign permits could be issued and installed. Staff agreed to an atypical practice of scheduling the case for public hearing seven days following the Sign Review Committee. All public notice requirements have been adhered to.

STAFF RECOMMENDATION: After a careful review of the applicant's proposal with respect to the business functions/operations for the approved commercial site plan, consideration of surrounding existing uses and consideration of the existing CSR Package, staff has determined that the proposed request is acceptable but must proceed to the board of supervisors for review and decision. Staff recommends **approval** of the applicant's request.

RECOMMENDED MOTION: I motion that the Sign Review Committee forward case **CSR-009-23** with a recommendation of approval to the Board of Supervisors as presented in the staff report with no stipulations.

PINAL COUNTY
WIDE OPEN OPPORTUNITY

Land Status

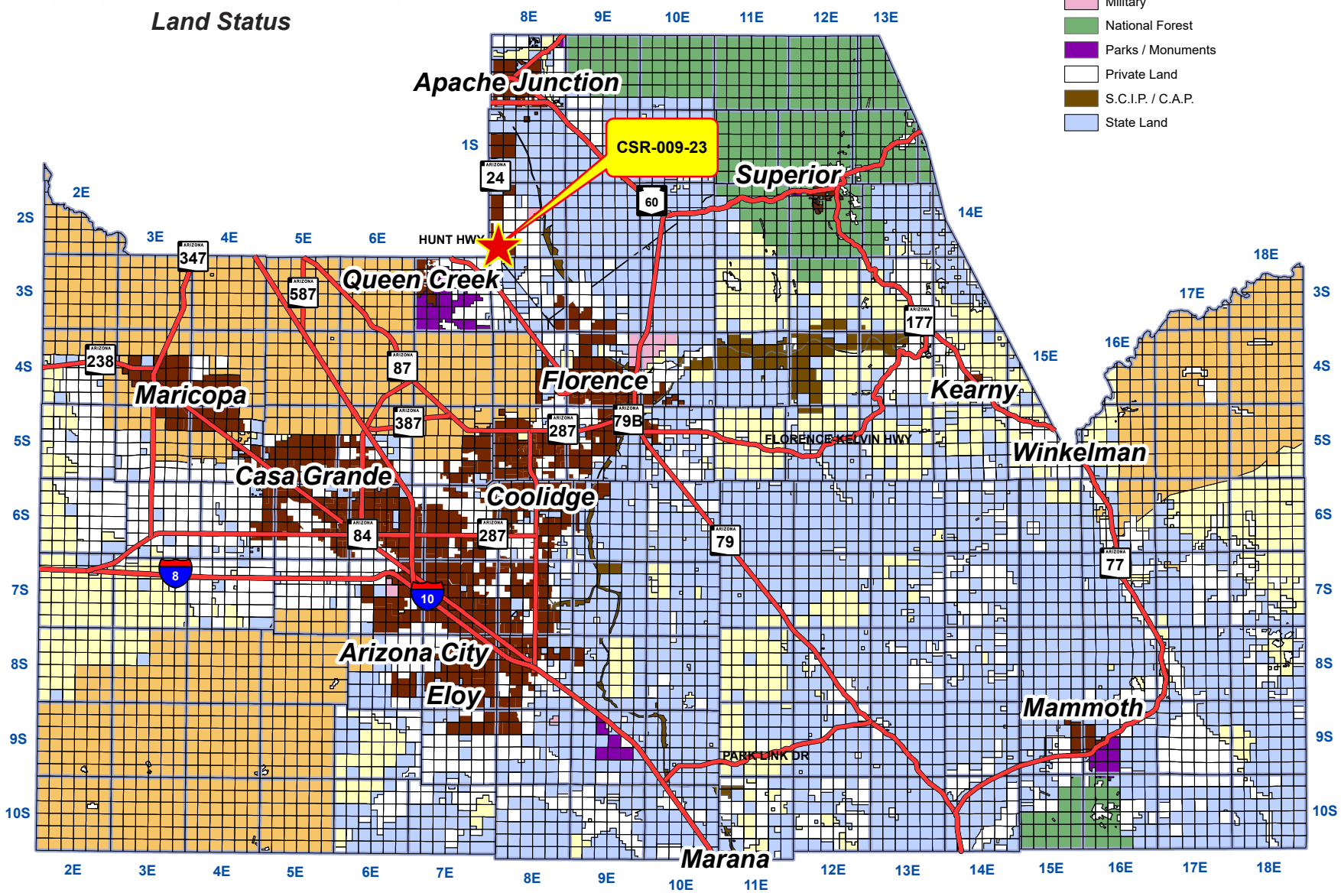

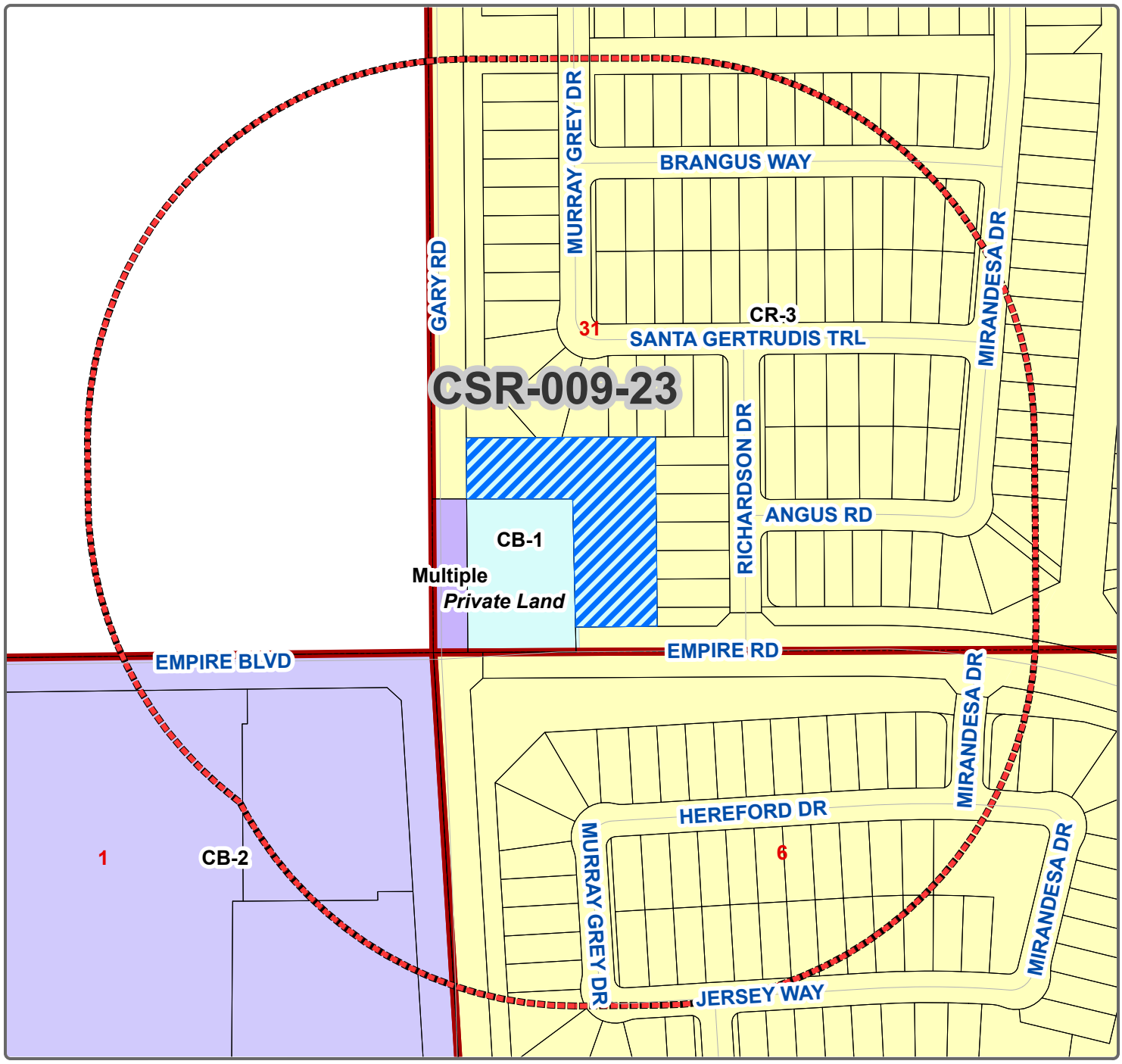

Community Development

CSR-009-23 – PUBLIC HEARING/ACTION: Clark Larson, Owner, and Amanda Lauridsen – Precise Sign Co. LLC, applicant/ agent, requesting approval of a Comprehensive Sign Package to allow the installation of two (2) monument signs and eight (8) wall signs with a maximum area of 76.66 square feet per sign, on a 1.22± acre parcel in the CB-1 Local Business Zone; tax parcel 104-22-013N (legal on file); situated in a portion of Section 31, Township 2 South, Range 8 East, of the Gila & Salt River Base & Meridian, Pinal County, Arizona, located on the northeast corner of N Gary Rd and W Empire Rd in San Tan Valley.

Current Zoning: CB-1	Requested Zoning: CRS	Current Land Use: MLDR

PINAL COUNTY
WIDE OPEN OPPORTUNITY

Legal Description: Situated in a portion of Section 31, Township 2 South, Range 8 East, of the Gila & Salt River Base & Meridian, Pinal County, Arizona, located on the northeast corner of N Gary Rd and W Empire Rd in San Tan Valley. SEC 31, TWN 02S, RNG 08E	N	Owner/Applicant: CLARK LARSON/AMANDA LAURIDSEN PRECISE SIGN CO. LLC	
		Drawn By: GIS / IT /LJT	Date: 02/23/2024
Sheet No. 1 of 1		Section 31 / Township 02S	Range 08E
		Case Number: CSR-009-23	

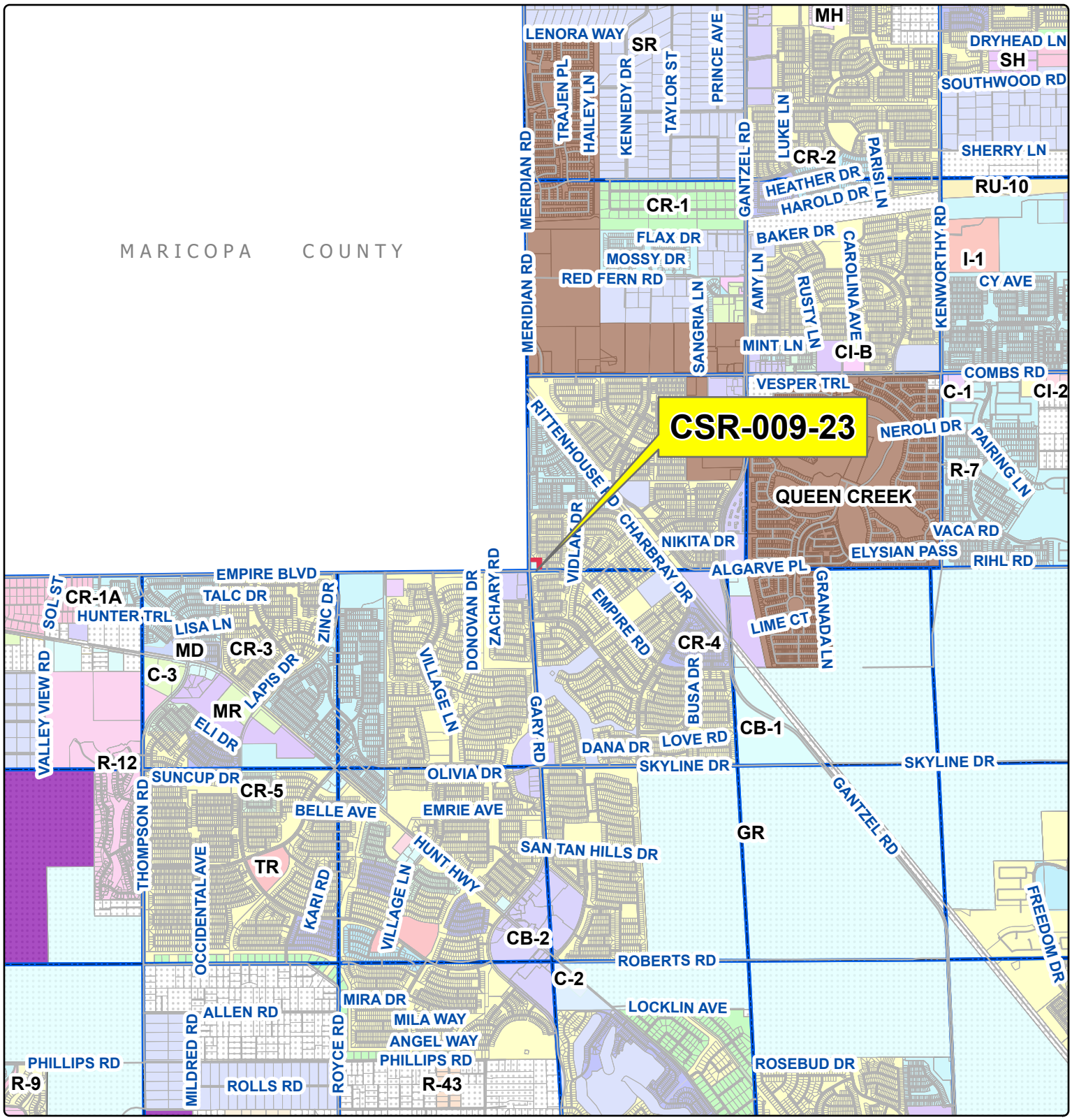

Community Development

PINAL COUNTY
WIDE OPEN OPPORTUNITY

Legal Description:

Situated in a portion of Section 31, Township 2 South, Range 8 East, of the Gila & Salt River Base & Meridian, Pinal County, Arizona, located on the northeast corner of N Gary Rd and W Empire Rd in San Tan Valley.

SEC 31, TWN 02S, RNG 08E

Owner/Applicant:	CLARK LARSON/AMANDA LAURIDSEN PRECISE SIGN CO. LLC		
Drawn By:	GIS / IT / LJT	Date:	02/23/2024
Sheet No. 1 of 1	Section 31	Township 02S	Range 08E
Case Number:	CSR-009-23		

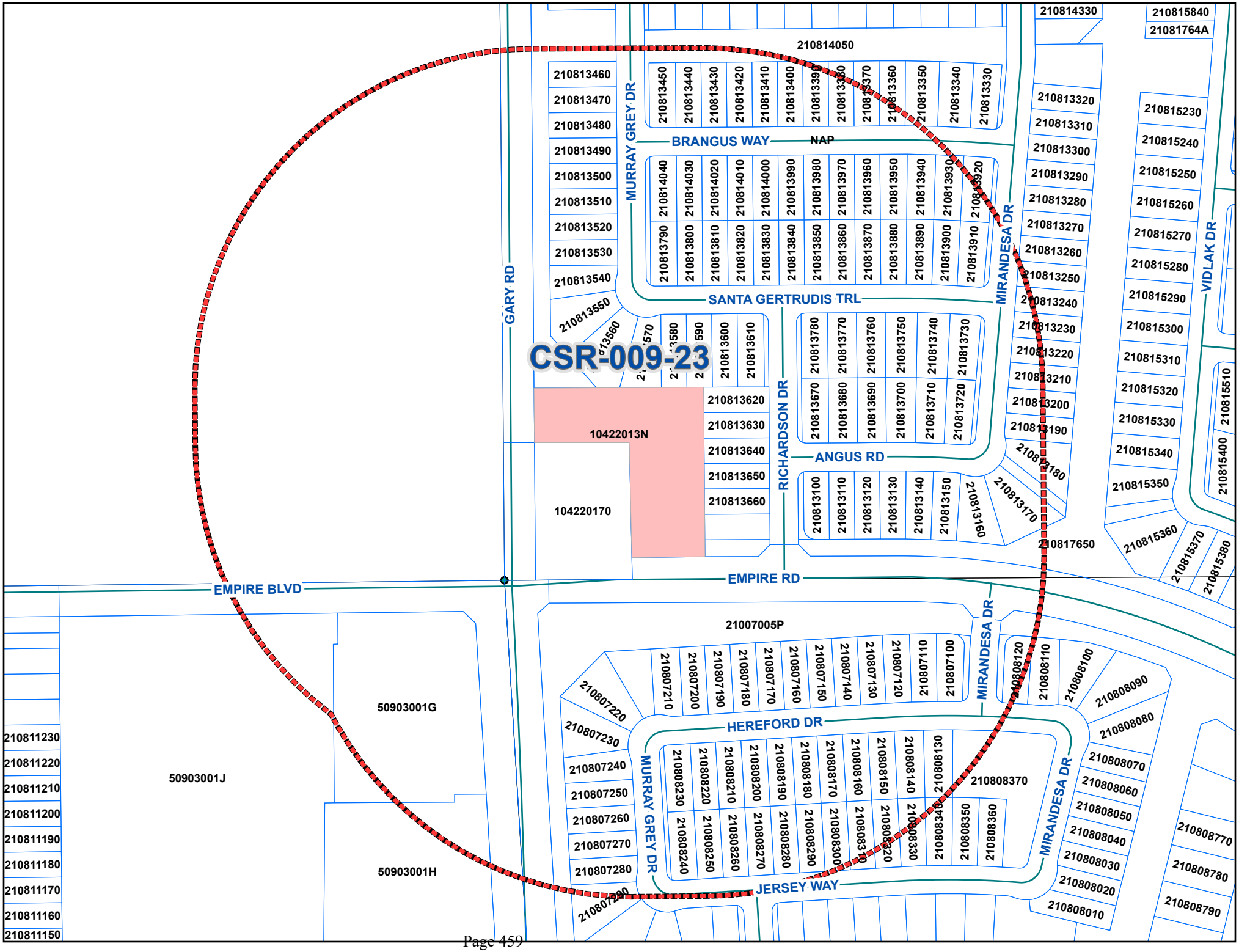
CSR-009-23
10422013N
104220170
GARY RD
EMPIRE BLVD
EMPIRE RD
MURRAY GREY DR
BRANGUS WAY
NAP
SANTA GERTRUDIS TRL
RICHARDSON DR
ANGUS RD
MIRANDESA DR
VIDLAK DR
HEREFORD DR
JERSEY WAY
210814050
210814330
210815840
21081764A
21007005P
50903001G
50903001J
50903001H

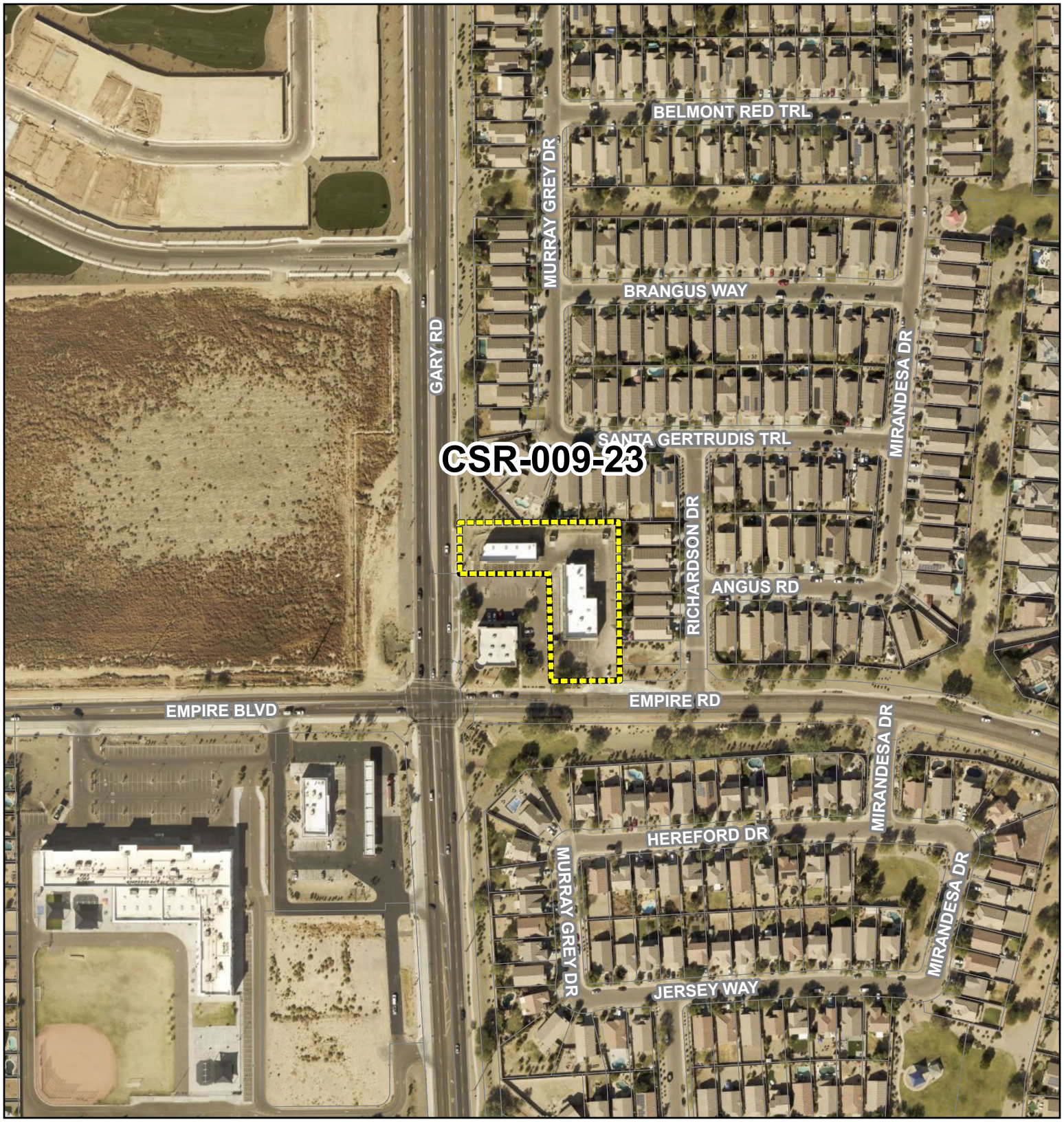

Community Development

PINAL COUNTY
WIDE OPEN OPPORTUNITY

CSR-009-23

MEETING DATE: FEBRUARY 27, 2024

TO: SIGN REVIEW COMMITTEE

CASE NO.: CSR-009-23 (GARY SQUARE)

CASE COORDINATOR: PATRICK ROBERTS, SENIOR PLANNER

Executive Summary:

This is a comprehensive sign package to allow installation of two monument signs and eight wall signs with a sign area maximum of 76.66 sq. ft. per sign within a commercial complex. The applicant is pursuing this sign package to provide commercial tenants with larger signs than the sign code currently permits.

<u>If This Request is Approved:</u>

The committee shall forward a recommendation to the Board of Supervisors to allow the applicant to request 76.66 sq. ft. of signage per business as indicated on the sign plan.

<u>Staff Recommendation/Issues for Consideration/Concern:</u>

Staff recommends <u>approval</u> of this Comprehensive Sign Package as presented in the staff report.

TAX PARCELS: 104-22-013N (Legal on file)

LANDOWNER: Clark Larson

APPLICANT/AGENT: Amanda Lauridsen, Precise Sign Co.

REQUESTED ACTION & PURPOSE: Clark Larson, Owner, Amanda Lauidsen Precise Sign Co. Applicant, requesting approval of a comprehensive sign package to allow the installation of two monument signs and eight wall signs with a square footage of 76.66 square feet per sign. The subject site is located on the Northeast corner of N Gary Road and W Empire Road in San Tan Valley.

LOCATION: The subject sites is at the Northeast corner of N Gary Road and W Empire Rd in San Tan Valley, AZ.

SIGNAGE SIZE: This is a comprehensive sign package request to allow the following:

- M-1 Monument Sign: 22.5 Square feet (Double Sided)
    - Tenant Signage: 2.44 Square feet (Qty. 4) 9.76 Square feet Total.

- M-2 Monument Sign: 22.5 Square feet (Double Sided)
    - Tenant Signs: 2.44 Square feet (Qty. 8) 19.52 Square feet total.

The monument signage proposed within this sign package is compliant with provisions of the sign code.

- T-1A Wall Sign: 76.66 Square feet maximum.
- T-1B Wall Sign: 76.66 Square feet maximum.
- T-2 Wall Sign: 76.66 Square feet maximum.
- T-3 Wall Sign: 76.66 Square feet maximum.
- T-4 Wall Sign: 76.66 Square feet maximum.
- T-5 Wall Sign: 76.66 Square feet maximum.
- T-6A Wall Sign: 76.66 Square feet maximum.
- T-6B Wall Sign: 76.66 Square feet maximum.
    - Wall Signage Total 613.28 Square feet maximum.

SITE: The site is zoned CB-1 (Local Business) and is currently pursuing building permits for commercial spaces including a dental office, and beverage store. The Site Plan Review has already been approved under SPR-018-21. The decision on this comprehensive sign package may impact operations on the site, since without approval permits for signage will be restricted to 48 square feet per business as described in the commercial complex section of the sign code.

ANALYSIS: The comprehensive sign package consists of eight signs with a potential maximum square footage of 613.28 square feet. The proposed sign plan would limit the individual signage to a maximum of 76.66 square feet per wall sign. The standards described in this sign package would also limit the maximum width of any proposed signage to 22’ 11”. The most intensive instance of this requirement would be T-5, which is placed on a tenant frontage offering the least store frontage at 28’ 1”. In this instance, 80% of building frontage width could potentially be occupied, however the signage would still be required to adhere to 76.66 square feet in area. The 80% width does not correlate directly to area, and the established dimensional constraints would ensure that the sign area is much lower than 80% of frontage area.

The site is within a commercial complex, via a shared access drive with the Banner Urgent Care both to the west and south. The proposed signage of 76.66 square feet per sign exceeds the maximum of 48 square feet by over 50%, so the director is required to forward this comprehensive sign package to the Board of Supervisors with a recommendation from the comprehensive sign committee. At 76.66 square feet per sign, the request for increase is an approximately 60% increase to area.

STAFF RECOMMENDATION: After a careful review of the applicant’s proposal with respect to the business functions/operations for the approved commercial site plan, consideration of surrounding existing uses and consideration of the existing CSR Package, staff has determined that the proposed request is acceptable but must proceed to the board of supervisors for review and decision. Staff recommends **approval** of the applicant’s request.

RECOMMENDED MOTION: I motion that the Sign Review Committee forward case **CSR-009-23** with a recommendation of approval to the Board of Supervisors as presented in the staff report with no stipulations.

Leo Lew
County Manager

PINAL COUNTY
WIDE OPEN OPPORTUNITY

PROCEDURE AND APPLICATION FOR A COMPREHENSIVE SIGN REVIEW

Chapter 2.145, Section 150; **Flexibility Provisions** of the Pinal County Development Services Code sets forth a procedure, which provides flexibility in the Sign Code for signs, or sign packages not allowed in Chapter 2.145, Sections 030 through 140, or as the result of a stipulation to a zoning approval. The procedures include the use of sign review to receive additional design flexibility for signs.

Submittal Package

A digital version of the following should be submitted with the sign application to be reviewed by the Sign Review Committee including:

- A justification letter describing the request and how the sign structure, materials, and colors are compatible with the project's building architecture. Include a list in outline form of each sign requested, both freestanding and wall, to include verbiage, area in square feet, and height.
- An inventory and photographs of any or all-existing freestanding signs on site.
- Preliminary Site Plan containing:
    - A vicinity map showing the location of the property in relation to adjoining properties.
    - Provide a north arrow, date of plan preparation, with subsequent revision dates. Project title and address/parcel number. Architect and/or consultant's name, address, and telephone number. Property owner name, address, and telephone number.
    - Provide a data table on the site plan that includes existing zoning and the net site area.
    - Show property boundaries and dimensions.
    - Show adjacent street right-of-way, existing and proposed; and existing/proposed street and sidewalk noted to centerline.
    - Show location of conceptual or existing landscape concepts including trees, shrubs, ground covers, berms, and screen walls.
    - Show location of proposed freestanding signs including dimensions, height, material and colors, and method of illumination.
    - Include elevations of buildings showing wall sign locations and dimensions.
    - When more than one sign is located on a property, or where more than one building or business is located in a single development project, such as a shopping center, a Comprehensive Sign Package shall be submitted demonstrating consistency and uniformity among signs within the project. The requirements of a Comprehensive Sign Package shall apply to all businesses within a related project, even if the properties have been subdivided. Revisions or amendments to the Comprehensive Sign Package shall require documentation from all tenants on the property prior to approval.
- Application submittal fees in the amount of $1,187.00

Procedure

Upon complete submittal staff will review the application and determine if the request can be administratively approved or if the proposal requires Board of Supervisors approval, please see PCDSC Chapter 2.145 for more information. If BOS approval Is required, Please allow up to 12 weeks for a hearing.

*** Your application must be submitted via the online portal at: https://citizenaccess.pinalcountyaz.gov/CitizenAccess. Please call or email the Planning Division for more information. There is a processing fee for online payments please follow this link for more information: http://www.pinalcountyaz.gov/CommunityDevelopment/Pages/OnlinePaymentsInfo.aspx

COMMUNITY DEVELOPMENT
Planning Division

85 N. Florence St., PO Box 2973, Florence, AZ 85132 T 520-866-6442 FREE 888-431-1311 F 520-866-6530
www.pinalcountyaz.gov

PINAL COUNTY
WIDE OPEN OPPORTUNITY

Leo Lew
County Manager

APPLICATION FOR COMPREHENSIVE SIGN REVIEW IN AN UNINCOROPARTED AREA PINAL COUNTY, ARIZONA

(Applications Must Be Typed or Written in Ink)

Comprehensive Sign Review & Property Information: (feel free to include answers and to these questions in a Supplementary Narrative, when doing so write see narrative on the space provided)

Project Name: Gary Square

Owner/Applicant: Clark Larson

Address: 35979 N Gary Rd, San Tan, AZ Phone/Fax: _____

Parcel #: 104-22-013-N Project Address: 35979 N Gary Rd

Property Zoning: _____ Case(s): _____ SPR Case: _____

Present Use of Property: Mixed Use Commercial

Proposed Use of Property: Mixed Use Commercial

Total # of Signs Proposed: 8 wall Signs 2 Monuments Total Square Feet of Signage Proposed: Estimated 628sq feet

Deviations Being Requested: Currently the sign code allows for 32-48 square feet per business, we are requesting to go to an estimated 77square feet per frontage, this will allow the tenants to have a large enough sign that can be seen from the street and driving through the parking lot. We are also adding a future monument sign to the package if the need arises.

Is this an Amendment of a previously approved Comprehensive Sign Review Package? _____ If yes what is the case number: CSR - _____

Is there a zoning violation on the property for which the owner has been cited? YES NO

If yes, zoning violation # _____

INV#: _____ AMT: _____ DATE: _____ CASE: _____ Xref: _____

COMMUNITY DEVELOPMENT
Planning Division

85 N. Florence St., PO Box 2973, Florence, AZ 85132 T 520-866-6442 FREE 888-431-1311 F 520-866-6530
www.pinalcountyaz.gov

PINAL COUNTY COMPREHENSIVE SIGN REVIEW APPLICATION

IN ADDITION TO THIS APPLICATION, YOU WILL NEED TO SUBMIT:

- ☐ A justification letter describing the request and how the sign structure, materials, and colors are compatible with the project's building architecture. Include a list in outline form of each sign requested, both freestanding and wall, to include verbiage, area in square feet, and height.
- ☐ An inventory and photographs of any existing freestanding or attached signs on site.
- ☐ Preliminary Site Plan containing:
  - A vicinity map showing the location of the property in relation to adjoining properties.
  - Provide a north arrow, date of plan preparation, with subsequent revision dates. Project title and address/parcel number. Architect and/or consultant's name, address, and telephone number. Property owner name, address, and telephone number.
  - Provide a data table on the site plan that includes existing zoning and the net site area.
  - Show property boundaries and dimensions.
  - Show adjacent street right-of-way, existing and proposed; and existing/proposed street and sidewalk noted to centerline.
  - Show location of conceptual or existing landscape concepts including trees, shrubs, ground covers, berms, and screen walls.
  - Show location of proposed freestanding signs including dimensions, height, material and colors, and method of illumination.
  - Include elevations of buildings showing wall sign locations and dimensions.
  - When more than one sign is located on a property, or where more than one building or business is located in a single development project, such as a shopping center, a Comprehensive Sign Package shall be submitted demonstrating consistency and uniformity among signs within the project. The requirements of a Comprehensive Sign Package shall apply to all businesses within a related project, even if the properties have been subdivided. Revisions or amendments to the Comprehensive Sign Package shall require documentation from all tenants on the property prior to approval.
- ☐ Property owner(s) authorization (attached to this application).
- ☐ Non-refundable application submittal fees in the amount of $1,187.00
- ☐ Submit one copy and a CD or Jump Drive which contains a copy of the application and narrative in PDF format. *This will not be needed if submitted through the online system please call us for more information on how to use the online portal

I certify the information included in this application is accurate, to the best of my knowledge. I have read the application and I have included the information, as requested. I understand if the information submitted is incomplete, this application cannot be processed.

480-310-7721

Clark Larson 24433 S. 201st CT Queen Creek AZ 85142

Name of Landowner (Applicant) AddressPhone Number

Larsonclark@gmail.com

Signature of Landowner (Applicant) E-Mail Address

Amanda Lauridsen 107 S 57th Drive, Phoenix, AZ 85043 623-261-8004 Amanda@precisesign.com

Name of Agent Address Phone Number

Amanda Lauridsen

Signature of Agent E-Mail Address

The Agent has the authority to act on behalf of the landowner. The Agent will be the contact person for Planning staff and must be present at all hearings. Please use the attached Agency Authorization form, if applicable

AGENCY AUTHORIZATION

(To be completed by landowners of subject property when landowners do not represent themselves. Instructions for completing required information are in bold and brackets below lines. If applicant is a company, corporation, partnership, joint venture, trustee, etc., please use the corporate signature block and have the notary fill in the notarization section for corporations not individuals and cannot be submitted digitally)

TO: Pinal County Community Development
P.O. Box 2973
Florence, AZ 85132

_____
[Insert Name -- If a Corporation, Partnership or Association, Include State of Incorporation]

hereinafter referred to as "Owner," is/are the owner(s) of_____acres located at _____, and further identified
[Insert Address of Property]

as assessor parcel number_____and legally described as follows:
[Insert Parcel Number]

[Legal Description is attached hereto as Exhibit A]

Said property is hereinafter referred to as the "Property."

Owner hereby appoints _____
[Insert Agent's Name. If the Agent Is a Company, Insert Company Name Only]

hereinafter referred to as "Agent," to act on Owner's behalf in relation to the Property in obtaining approvals from Pinal County for any necessary amendment to Pinal County's Comprehensive Plan; zone changes; planned area development overlay districts; platting of the subject property; special use permit or industrial use permit; and to file applications and make the necessary submittals for such approvals.

Owner consents and agrees to be bound by all stipulations agreed to by this Agent in connection with any of above-referenced processes.

[Individual PROPERTY OWNER signature block and acknowledgment. DO NOT SIGN HERE IF SIGNING AS AN OFFICER OF A CORPORATION ON THE NEXT PAGE.]

[Signature]
24433 S 201st CT, Queen Creek AZ 85142
[Address]

Dated: 11-10-23

[Signature]
[Address]

Dated: _____

STATE OF Arizona)
) ss.
COUNTY OF Maricopa)

The foregoing instrument was acknowledged before me this 10 day of November, 2023 by Clark David Larson.
[Insert Name of Signor(s)]

My commission expires 04/24/27

BRENNA WOLFERT
Notary Public - State of Arizona
PINAL COUNTY
Commission # 650951
Expires April 24, 2027

A.L.T.A. / N.S.P.S. LAND TITLE SURVEY

A PORTION OF THE SOUTHWEST QUARTER OF SECTION 31, TOWNSHIP 2 SOUTH, RANGE 8 EAST OF THE GILA AND SALT RIVER BASE AND MERIDIAN, PINAL COUNTY, ARIZONA.

SURVEY NOTES

1. This survey and the description used are based on a 2nd Amended Commitment for Title Insurance issued by Commonwealth Land Title Insurance Company, File Number 21000170-040-BN1-A98, dated February 25, 2021, Amendment dated March 5, 2021.

2. BASIS OF BEARING: The South line of the Southwest quarter of Section 31, using a bearing of South 89 degrees 50 minutes 22 seconds West, per the Deed No. 2020-103813, P.C.R.

3. The bearings and distances depicted indicate actual field or computed measurements performed during the course of this survey. This information may vary from documents of record used for this survey.

4. The utility information shown is limited to visible above ground evidence. This survey makes no attempt to depict any underground utilities and there is no guarantee or warranty to the exact location or presence of any underground utilities that may actually exist adjacent to or within the boundaries of the subject property. Prior to any excavation please call an underground utility locator or "BLUE STAKE" at (602)659-7500 for the precise location and extent of all utilities in the area.

5. This Survey has been prepared exclusively for the parties stated in the certification for use in conjunction with the escrow referenced in Survey Note No. 1. Reproduction or use of this survey by any other party for any other transaction or purpose is unauthorized without written authorization from Alliance Land Surveying, LLC. The use of the word "certify" or "certification" by a person or firm that is registered or certified by the board is an expression of professional opinion regarding facts or findings that are the subject of the certification and does not constitute an express or implied warranty or guarantee (A.R.S. 32-151).

6. At the time of this survey there was no active/observable above ground evidence of earth moving work, building construction or building additions. The surveyor has no knowledge of street right of way changes, proposed or completed, and there was no observable above ground evidence of street or sidewalk construction.

SCHEDULE "B" ITEMS

(7) Easement(s) for the purpose(s) shown below and rights incidental thereto as set forth in a document:
Purpose: electric transmission lines
Recording No.: Docket 40, page 60
(THE EASEMENT LANDS WITHIN THE R/W OF EMPIRE ROAD AND HAS NOT BEEN SHOWN HEREON)

(8) Easement(s) for the purpose(s) shown below and rights incidental thereto as set forth in a document:
Purpose: electric transmission lines
Recording No.: Docket 40, page 62
(THE EASEMENT LANDS WITHIN THE R/W OF GARY ROAD AND HAS NOT BEEN SHOWN HEREON)

(9) Easement(s) for the purpose(s) shown below and rights incidental thereto as set forth in a document:
Purpose: pipelines
Recording No.: Docket 138, page 356
Thereafter a Conveyance recorded in Docket 1572, page 603
(AFFECTS ALL OF SECTION 31 - NO DEFINED EASEMENT LOCATION - NOT PLOTTABLE)

(10) Easement(s) for the purpose(s) shown below and rights incidental thereto as set forth in a document:
Purpose: road Recording
No.: Docket 166, page 81
(PLOTTABLE MATTERS SHOWN HEREON)

(11) Easement(s) for the purpose(s) shown below and rights incidental thereto as set forth in a document:
Purpose: telephone and telegraph lines
Recording No.: Docket 592, page 108
Thereafter Release of easement recorded in
Recording No. 2005-72807
(EASEMENT WAS RELEASED PER DOC. NO. 2005-72807, P.C.R.)

(12) Matters contained in that certain document
Entitled: An Ordinance of the Board of Supervisors of Pinal County, Arizona,Relating to
Residential Fireplace Restrictions
Recording Date: January 5, 2001
Recording No.: 2001-000756
Recording Date: January 8, 2008
Recording No. 2008-001862
(AFFECTS SUBJECT PROPERTY - NOT PLOTTABLE)

(13) A resolution in favor of Pinal County
For: Releasing Maintenance Bond No. LAIFSU0722530-M
Recording Date: January 8, 2021
Recording No: 2021-002819
(DOES NOT AFFECT SUBJECT PROPERTY)

LINE	BEARING	DISTANCE
L1(R&M)	N 89°50'22" E	55.00'
L2(R)	N 00°20'20" W	100.00'
L2(M)	N 00°19'32" W	100.08'
L3(R)	N 89°50'19" E	300.00'
L3(M)	N 89°50'54" E	300.03'
L4(R)	S 00°20'20" E	300.01'
L4(M)	S 00°18'52" E	300.03'
L5(R)	S 89°50'22" W	115.00'
L5(M)	S 89°50'22" W	114.76'
L6	N 00°23'08" W	200.00'
L7	S 89°50'22" W	185.00'
L8(R)	S 00°20'20" E	40.00'
L8(M)	S 00°23'08" E	40.00'
L9	S 89°50'54" W	55.00'
L10	S 00°18'52" E	40.00'
L11	S 00°03'09" E	6.00'
L12	S 00°20'20" E	6.00'

LEGEND

- Property Corner (See Monument Table)
- Property Line
- Fnd Survey Monument (See Monument Table)
- (1) (See Monument Table)
- (R) See Reference Documents
- (M) Measured
- Schedule "B" Item
- 24 inch Vertical Curb & Gutter
- 6 inch Concrete Curb
- DRIVE Indicates Driveway (means of access)
- Concrete Surface
- Wall
- O.H.E. Overhead Electric Line
- Drywell Or Catch Basin
- Fire Hydrant
- Mail Box
- Manhole
- Metal Cover
- Power Pole
- Power Pole W/ Underground Electric
- Sewer Clean Out
- Telephone Riser
- Water Meter
- Water Valve
- TV Junction Box
- ATF Physical Access To & From Adjoining Property

MONUMENT TABLE	
(1)	SW. COR. SEC. 31 - FND BRASS CAP IN HANDHOLE
(2)	E. 1/4 COR. SEC. 36 T2S, R7E - NO MONUMENT FND OR SET CALC'D POSITION PER (R1)
(3)	NW. COR. SEC. 31 - FND BRASS CAP FLUSH
(4)	FND PINAL COUNTY HIGHWAY DEPARTMENT BRASS CAP FLUSH
(5)	FND 1/2" REBAR W/CAP L.S. 17548 AS SHOWN ON (R3)
(6)	FND 5/8" REBAR NO I.D. - SET TAG L.S. 31020
(7)	FND PK NAIL NO I.D. ON TOP OF WALL AS SHOWN ON (R3)
(8)	FND 1/2" REBAR NO I.D. - SET CAP L.S. 31020
(9)	SET PK NAIL & WASHER L.S. 31020

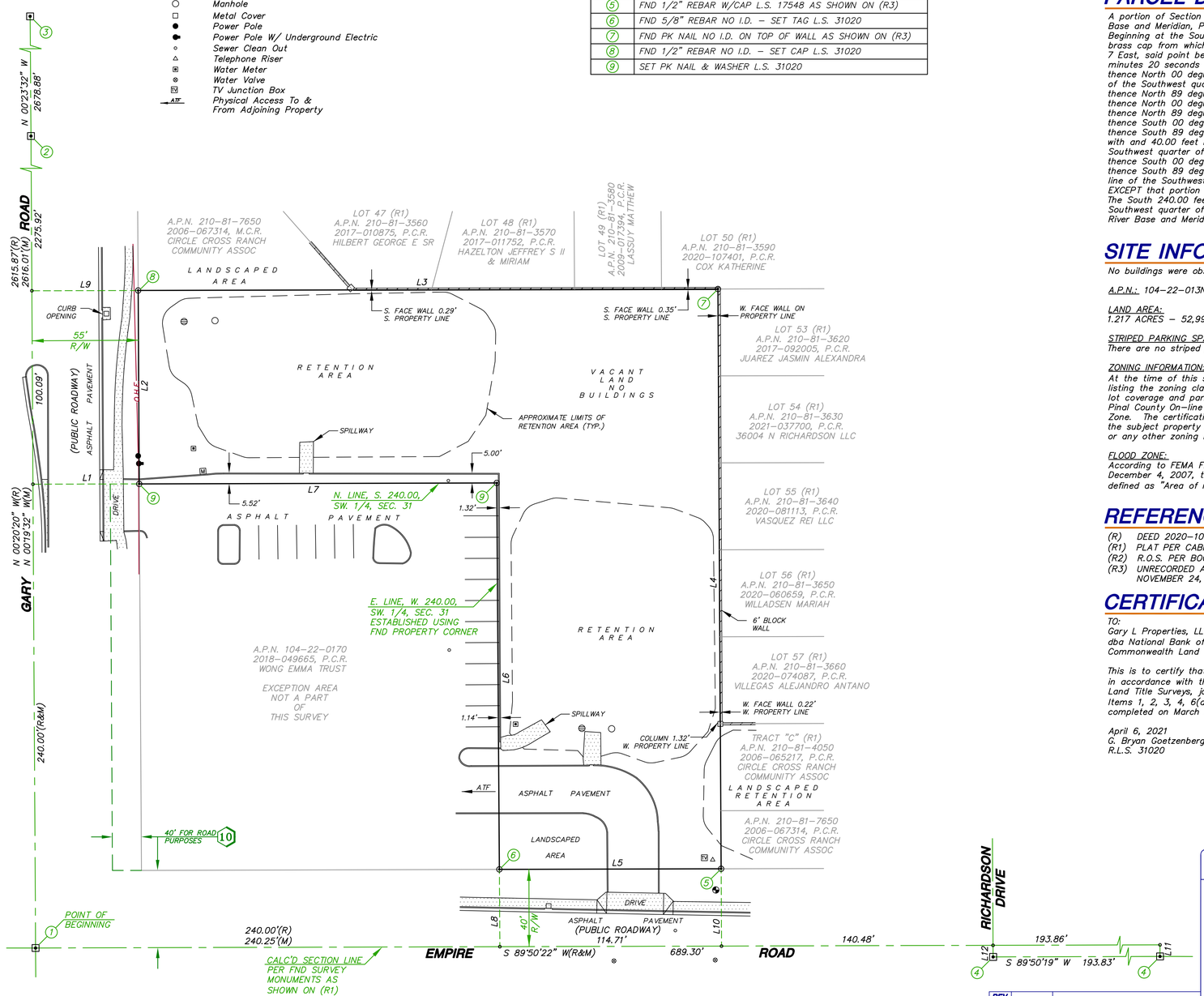

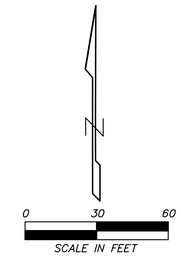

SCALE : 1" = 30'

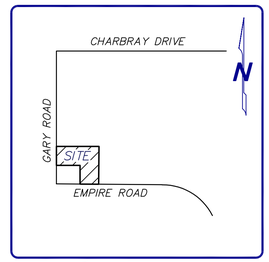

VICINITY MAP

NOT TO SCALE

PARCEL DESCRIPTION

A portion of Section 31, Township 2 South, Range 8 East, of the Gila and Salt River Base and Meridian, Pinal County, Arizona, described as follows:
Beginning at the Southwest corner of Section 31, said point being marked by a GLO brass cap from which the East quarter corner of Section 36, Township 2 South, Range 7 East, said point being marked by a GLO brass cap, bears North 00 degrees 20 minutes 20 seconds West, a distance of 2,615.87 feet;
thence North 00 degrees 20 minutes 20 seconds West, 240.00 feet along the West line of the Southwest quarter of Section 31;
thence North 89 degrees 50 minutes 22 seconds East, 55.00 feet;
thence North 00 degrees 20 minutes 20 seconds West, 100.00 feet;
thence North 89 degrees 50 minutes 19 seconds East, 300.00 feet;
thence South 00 degrees 20 minutes 20 seconds East, 300.01 feet;
thence South 89 degrees 50 minutes 22 seconds West, 115.00 feet along a line parallel with and 40.00 feet North of, measured at right angles to, the South line of the Southwest quarter of Section 31;
thence South 00 degrees 20 minutes 20 seconds East, 40.00 feet;
thence South 89 degrees 50 minutes 22 seconds West, 240.00 feet along the South line of the Southwest quarter of Section 31 to the point of beginning;
EXCEPT that portion described as follows:
The South 240.00 feet of the West 240.00 feet of the Southwest quarter of the Southwest quarter of Section 31, Township 2 south, Range 8 East of the Gila and Salt River Base and Meridian, Pinal County, Arizona.

SITE INFORMATION

No buildings were observed on the surveyed property.

A.P.N.: 104-22-013N

LAND AREA:
1.217 ACRES - 52,995 SQ. FT.

STRIPED PARKING SPACE TABULATION:
There are no striped parking spaces on the subject property.

ZONING INFORMATION:
At the time of this survey's completion a zoning report or zoning verification letter listing the zoning classification, building setback information, building height restriction, lot coverage and parking requirements was not provided to the surveyor. Based on the Pinal County On-line Zoning Map, the subject property is zoned CB-1, Local Business Zone. The certification on this survey does not guarantee or provide any warranty that the subject property is in compliance with the zoning regulations shown on this survey or any other zoning regulation that applies to the subject property.

FLOOD ZONE:
According to FEMA Flood Insurance Rate Map, Map Number 04021C0475E, dated December 4, 2007, the subject property is located in Zone X. Zone X is defined as "Area of minimal flood hazard."

REFERENCE DOCUMENTS

(R) DEED 2020-103813, P.C.R.
(R1) PLAT PER CABINET G, SLIDE 2, P.C.R.
(R2) R.O.S. PER BOOK 14, PAGE 230, P.C.R.
(R3) UNRECORDED A.L.T.A. SURVEY PREPARED BY C.E.G., PROJECT NO. 14-056, DATED NOVEMBER 24, 2014

CERTIFICATION

TO:
Gary L Properties, LLC an Arizona limited liability company; Zions Bancorporation, N.A. dba National Bank of Arizona, its immediate successors and/or assigns; and Commonwealth Land Title Insurance Company.

This is to certify that this map or plat and the survey on which it is based were made in accordance with the 2021 Minimum Standard Detail Requirements for ALTA/NSPS Land Title Surveys, jointly established and adopted by ALTA and NSPS, and includes Items 1, 2, 3, 4, 6(a), 8, 9, 13, 14, 16 and 17 of Table A thereof. The fieldwork was completed on March 24, 2021.

April 6, 2021
G. Bryan Goetzenberger
R.L.S. 31020

REGISTERED LAND SURVEYOR
CERTIFICATE NO.
31020
G. BRYAN GOETZENBERGER
Exp. 4/6/21
Expires
ARIZONA U.S.A.

ALT.A / N.S.P.S. LAND TITLE SURVEY
35979 N. GARY ROAD, SAN TAN VALLEY, AZ

ALLIANCE LAND SURVEYING LLC
7900 N. 70th AVENUE, SUITE 104
GLENDALE, AZ 85303
Phone: (623) 972-2200
contactus@azals.com
www.alliancelandsurveying.com

REV.	
REV.	
REV.	

SHEET: 1 OF 1 | DATE: 4-6-21 | JOB NO.: 210325

To Whom It May Concern,

Gary Square at 35979 Gary Rd, San Tan, AZ would like to obtain a CSR on the property due to the sign code limitations without a CSR.

For the building signs we were limited to under 48 square feet, and are requesting 76.66 square feet to be the largest square feet allowed for a sign on any suite frontage. This allows the tenants to have a sign large enough to be seen from the parking lot and entrances from the road. With obtaining a CSR it will also allow Gary Square to have constancy with their signs and placement on their suite frontages. This will make sure that the complex stays looking nice and aesthetically pleasing, as their is consistency. We are requesting the CSR to be approved with pan channel letters to all be illuminated with white LEDs with wiring and power supplies to be concealed in letters and behind walls. All signs will be required to be installed below 24', with the tallest part of the building being 24'-6". All signs will be required to be 22'-11" or shorter in width, max letter height will be constrained based upon max width and max square feet, but not to extend beyond sign band, as portrayed in the CSR.

Please call me with any questions or concern.

Sincerely,

Amanda Lauridsen

Amanda Lauridsen
Account Manager
Precise Sign Co
Cell - 623-261-800
Email: amanda@precisesign.com

35979 N GARY ROAD BUILDINGS A & B

COMPREHENSIVE SIGN PROGRAM

SUBMITTED: NOVEMBER 7, 2023

precise sign co.
107 SOUTH 57TH DRIVE
PHOENIX, AZ 85043
t 602.278.2906
e. amanda@precisesign.com
www.precisesign.com

35979 N GARY RD, SAN TAN VALLEY, AZ 85143

PROJECT LOCATION

SCALE: NTS

SIGN LOCATIONS

- M-1 MONUMENT SIGN
- T-1 TENANT ILLUMINATED LETTERS

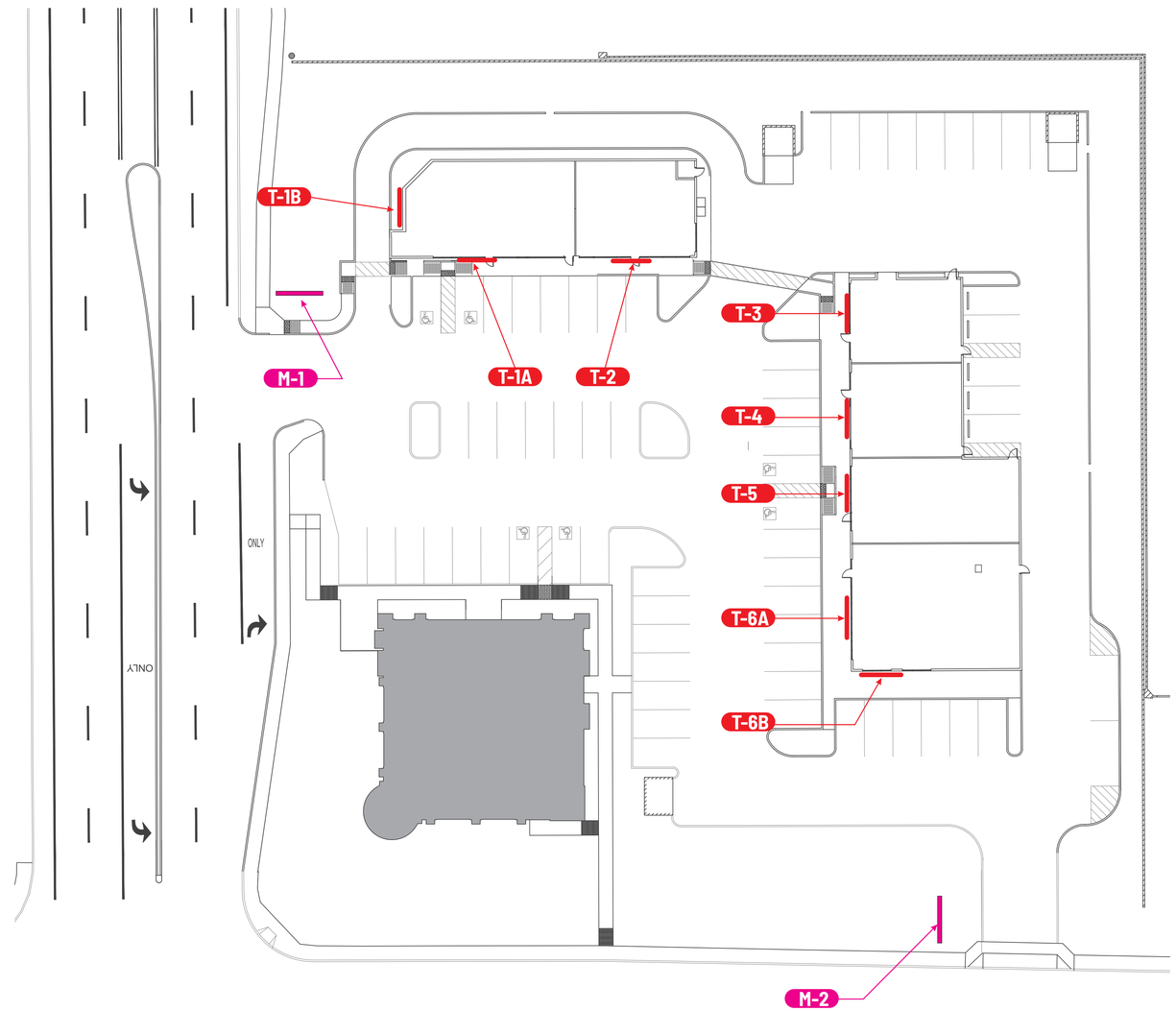

SIGN LOCATIONS - BUILING A & B

SCALE: NTS

PRECISE SIGN COMPANY

107 SOUTH 57TH DRIVE
PHOENIX, AZ 85043
t 602.278.2906
e. amanda@precisesign.com
www.precisesign.com

PROJECT NAME: **35979 GARY ROAD**

PROJECT ADDRESS: 35979 N GARY ROAD SAN TAN VALLEY, AZ 85143

DATE:	11 07 2023
PAGE SIZE:	34 X 22
SR ACCT MNGR:	AMANDA LAURIDSEN
COORDINATOR:	AMANDA LAURIDSEN
DESIGNER:	BRUCE DANIELS

OWNER/LANDLORD APPROVAL

COPY · COLORS · SIZES
PRECISE SIGN COMPANY does NOT provide primary electrical power to sign locations - responsibility of others.

Owner/Landlord Signature Date

OWNER/LANDLORD APPROVAL

Owner/Landlord Signature Date

This drawings are property of PRECISE SIGN COMPANYand cannot be reproduced in whole or in part, without prior written approval.

JOB NUMBER PS11012023

SHEET 2

©20232, PRECISE SIGN COMPANY

SPECIFICATIONS

DESCRIPTION: SITE MONUMENT
DIMENSIONS: 60" W X 60"H
MATERIAL: ALUMINUM
FONT: MANIFOLD
CORNERS: NONE
BRAILLE: SQUARE
MOUNTING: CONCRETE FOOTINGS
QUANTITY: 2
NOTES:

COLOR KEY

BLACK - RAL9005-JET BLACK

GENERAL NOTE:
ALL DRAWINGS IN THIS DOCUMENT ARE ACCURATE FOR SIZE AND GRAPHIC LAYOUTS

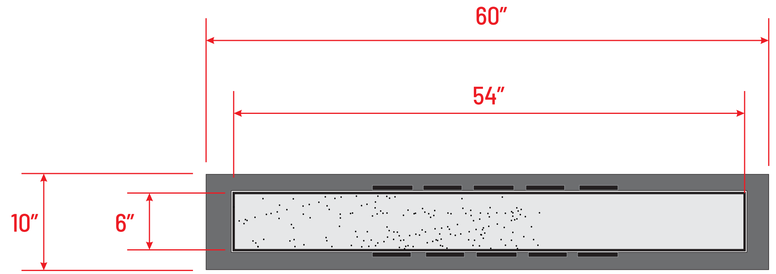

SITE MONUMENT SIGN - TOP VIEW

SCALE: 1 1/2" = 1'-0"

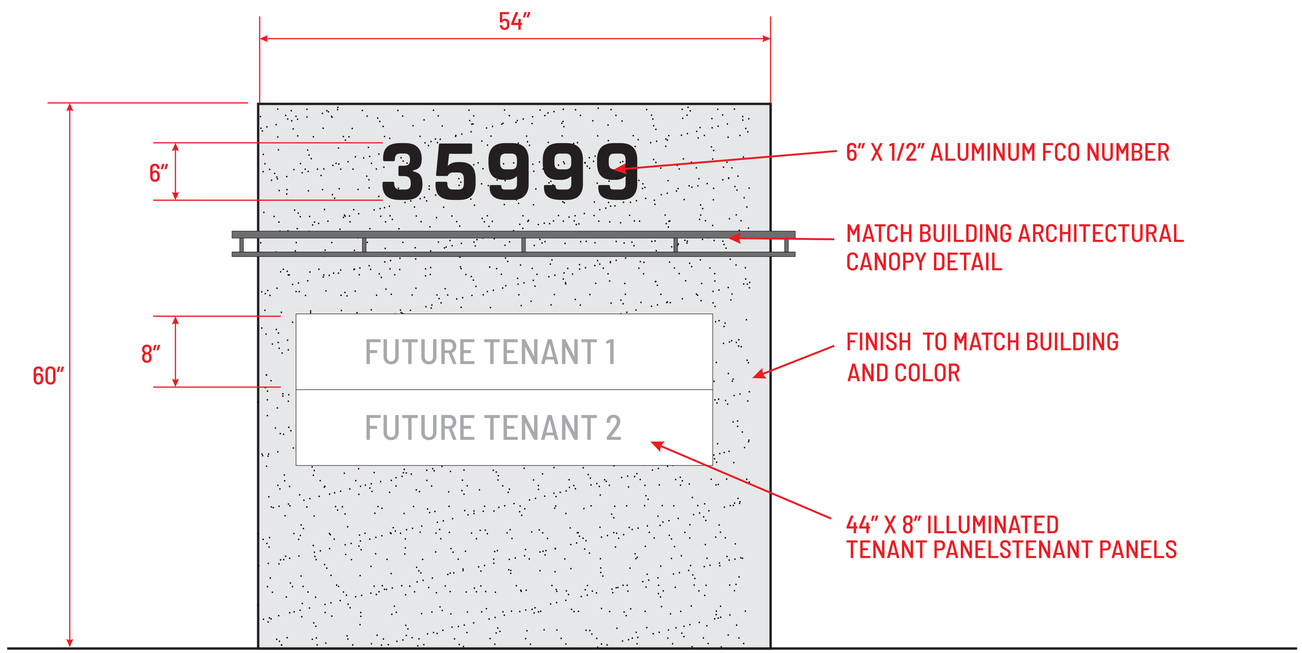

SITE MONUMENT SIGN M-1 - FRONT ELEVATION

SCALE: 1 1/2" = 1'-0"

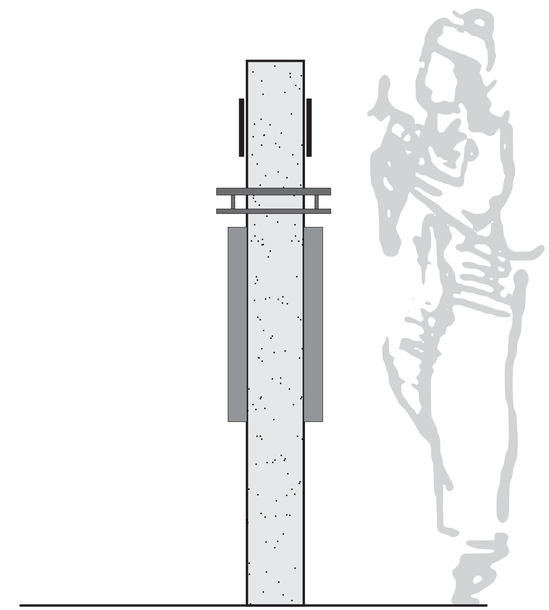

SITE MONUMENT SIGN - SIDE VIEW

SCALE: 1 1/2" = 1'-0"

P R E C I S E S I G N C O M P A N Y

107 SOUTH 57TH DRIVE
PHOENIX, AZ 85043
t 602.278.2906
e. amanda@precisesign.com
www.precisesign.com

PROJECT NAME:
35979 GARY ROAD
PROJECT ADDRESS:
35979 N GARY ROAD
SAN TAN VALLEY, AZ 85143

DATE:	11 07 2023
PAGE SIZE:	34 X 22
SR ACCT MNGR:	AMANDA LAURIDSEN
COORDINATOR:	AMANDA LAURIDSEN
DESIGNER:	BRUCE DANIELS

OWNER/LANDLORD APPROVAL
COPY · COLORS · SIZES
PRECISE SIGN COMPANY does NOT provide primary electrical power to sign locations - responsibility of others.
Owner/Landlord Signature Date

OWNER/LANDLORD APPROVAL
Owner/Landlord Signature Date

This drawings are property of PRECISE SIGN COMPANYand cannot be reproduced in whole or in part, without prior written approval.

JOB NUMBER
PS11012023

SHEET
3

©20233, PRECISE SIGN COMPANY

SPECIFICATIONS

DESCRIPTION: SITE MONUMENT
DIMENSIONS: 60" W X 60"H
MATERIAL: ALUMINUM
FONT: MANIFOLD
CORNERS: NONE
BRAILLE: SQUARE
MOUNTING: CONCRETE FOOTINGS
QUANTITY: 2
NOTES:

COLOR KEY

BLACK - RAL9005-JET BLACK

GENERAL NOTE:
ALL DRAWINGS IN THIS DOCUMENT ARE ACCURATE FOR SIZE AND GRAPHIC LAYOUTS

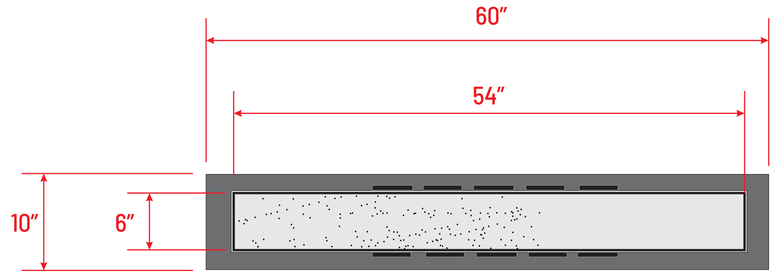

SITE MONUMENT SIGN - TOP VIEW

SCALE: 1 1/2" = 1'-0"

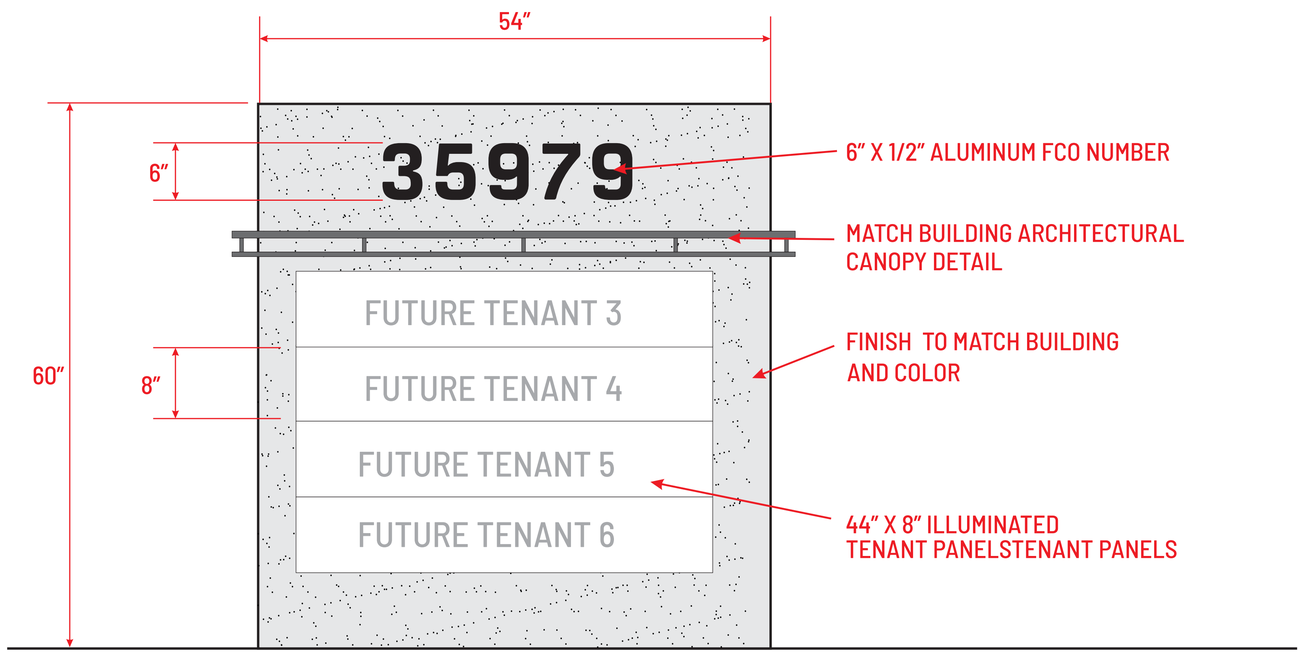

SITE MONUMENT SIGN M-2 - FRONT ELEVATION

SCALE: 1 1/2" = 1'-0"

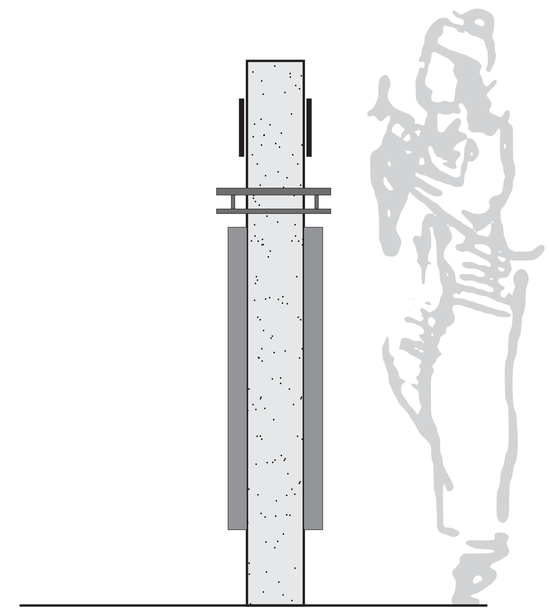

SITE MONUMENT SIGN - SIDE VIEW

SCALE: 1 1/2" = 1'-0"

P R E C I S E S I G N C O M P A N Y

107 SOUTH 57TH DRIVE
PHOENIX, AZ 85043
t 602.278.2906
e. amanda@precisesign.com
www.precisesign.com

PROJECT NAME:
35979 GARY ROAD
PROJECT ADDRESS:
35979 N GARY ROAD
SAN TAN VALLEY, AZ 85143

DATE:	11 07 2023
PAGE SIZE:	34 X 22
SR ACCT MNGR:	AMANDA LAURIDSEN
COORDINATOR:	AMANDA LAURIDSEN
DESIGNER:	BRUCE DANIELS

OWNER/LANDLORD APPROVAL
COPY · COLORS · SIZES
PRECISE SIGN COMPANY does NOT provide primary electrical power to sign locations - responsibility of others.
Owner/Landlord Signature Date

OWNER/LANDLORD APPROVAL
Owner/Landlord Signature Date

This drawings are property of PRECISE SIGN COMPANYand cannot be reproduced in whole or in part, without prior written approval.

JOB NUMBER
PS11012023

SHEET
4

©20234, PRECISE SIGN COMPANY

BUILDING A ELEVATIONS

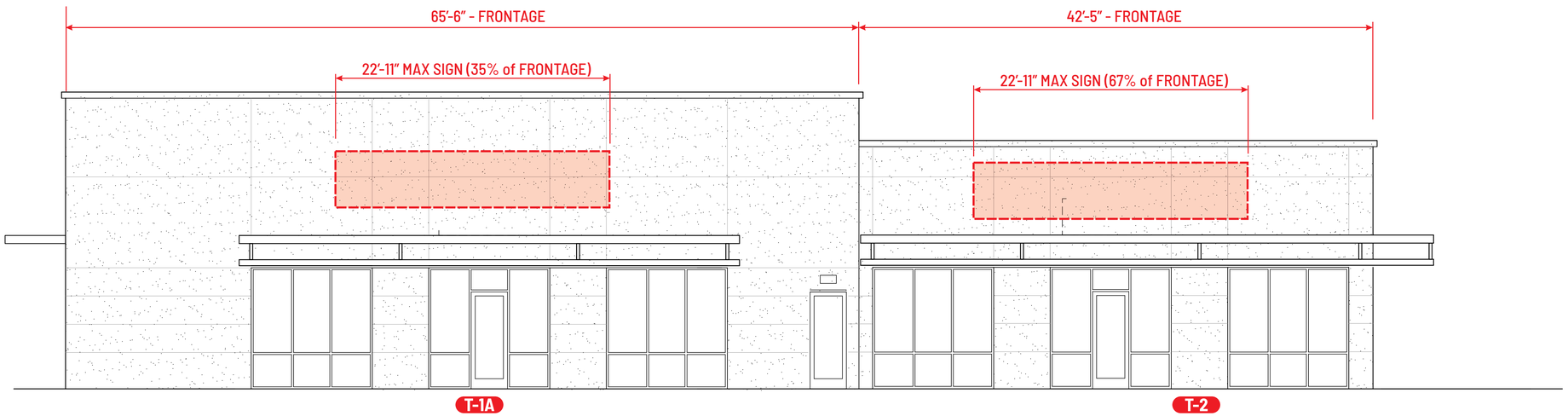

SOUTH ELEVATION

SCALE: 3/16" = 1'-0"

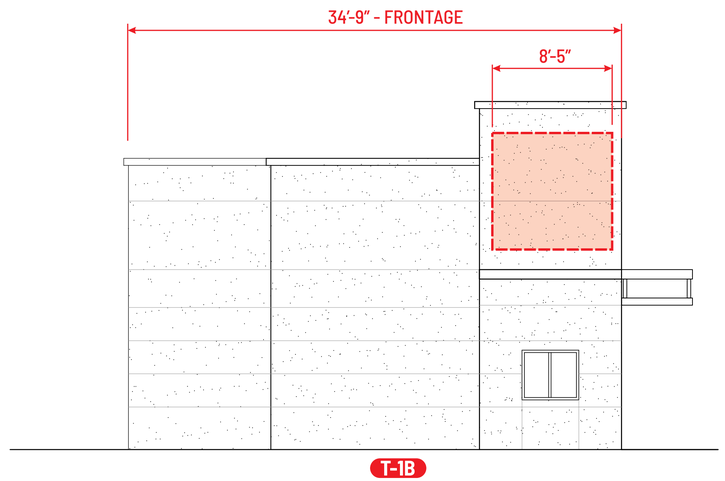

WEST ELEVATION

SCALE: 3/16" = 1'-0"

P R E C I S E S I G N C O M P A N Y

107 SOUTH 57TH DRIVE
PHOENIX, AZ 85043
t 602.278.2906
e. amanda@precisesign.com
www.precisesign.com

PROJECT NAME:
35979 GARY ROAD
PROJECT ADDRESS:
35979 N GARY ROAD
SAN TAN VALLEY, AZ 85143

DATE:	11 07 2023
PAGE SIZE:	34 X 22
SR ACCT MNGR:	AMANDA LAURIDSEN
COORDINATOR:	AMANDA LAURIDSEN
DESIGNER:	BRUCE DANIELS

OWNER/LANDLORD APPROVAL
COPY · COLORS · SIZES
PRECISE SIGN COMPANY does NOT provide primary electrical power to sign locations - responsibility of others.
Owner/Landlord Signature Date

OWNER/LANDLORD APPROVAL
Owner/Landlord Signature Date

This drawings are property of PRECISE SIGN COMPANYand cannot be reproduced in whole or in part, without prior written approval.

JOB NUMBER
PS11012023

SHEET
5

©20235, PRECISE SIGN COMPANY

BUILDING B ELEVATIONS

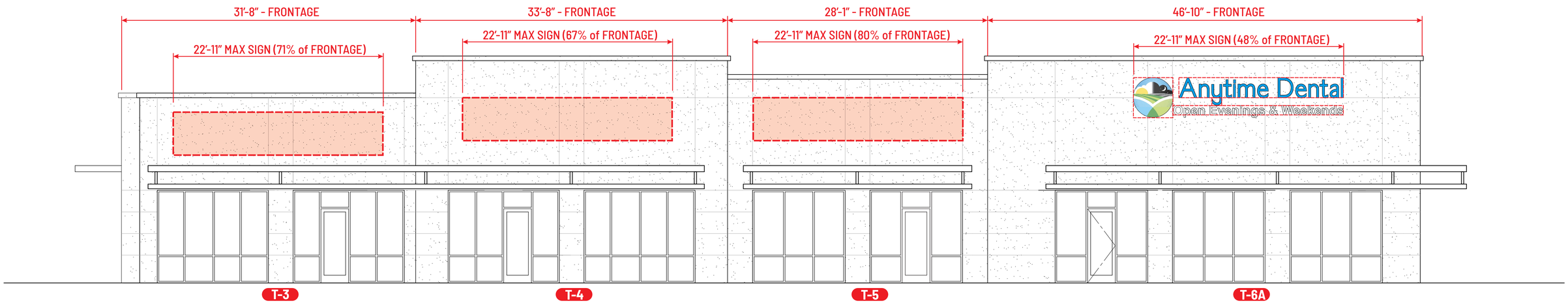

WEST ELEVATION

SCALE: 3/16" = 1'-0"

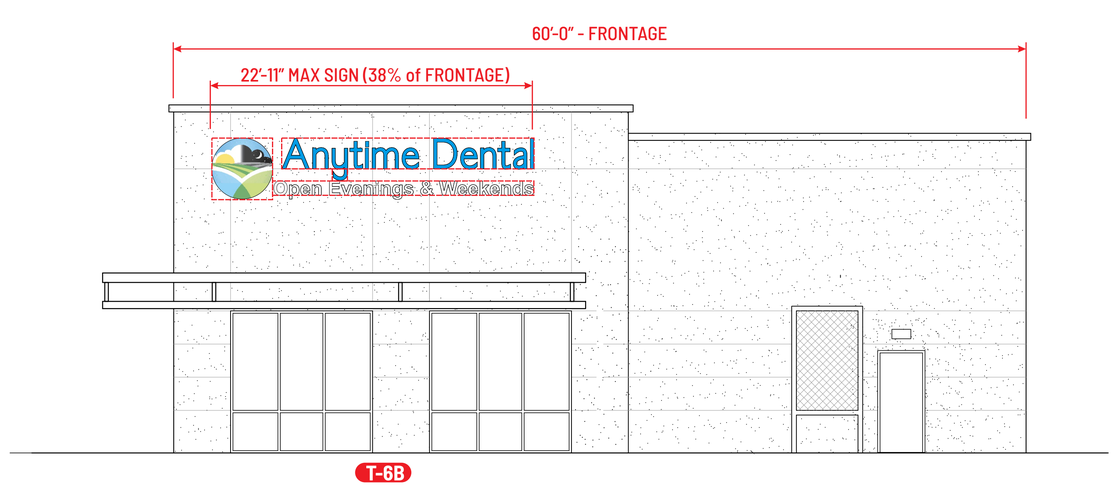

SOUTH ELEVATION

SCALE: 3/16" = 1'-0"

P R E C I S E S I G N C O M P A N Y

107 SOUTH 57TH DRIVE
PHOENIX, AZ 85043
t 602.278.2906
e. amanda@precisesign.com
www.precisesign.com

PROJECT NAME:
35979 GARY ROAD
PROJECT ADDRESS:
35979 N GARY ROAD
SAN TAN VALLEY, AZ 85143

DATE:	11 07 2023
PAGE SIZE:	34 X 22
SR ACCT MNGR:	AMANDA LAURIDSEN
COORDINATOR:	AMANDA LAURIDSEN
DESIGNER:	BRUCE DANIELS

OWNER/LANDLORD APPROVAL
COPY · COLORS · SIZES
PRECISE SIGN COMPANY does NOT provide primary electrical power to sign locations - responsibility of others.
Owner/Landlord Signature Date

OWNER/LANDLORD APPROVAL
Owner/Landlord Signature Date

This drawings are property of PRECISE SIGN COMPANYand cannot be reproduced in whole or in part, without prior written approval.

JOB NUMBER
PS11012023

SHEET
6

©20236, PRECISE SIGN COMPANY

TYPICAL SIGN MEASUREMENT

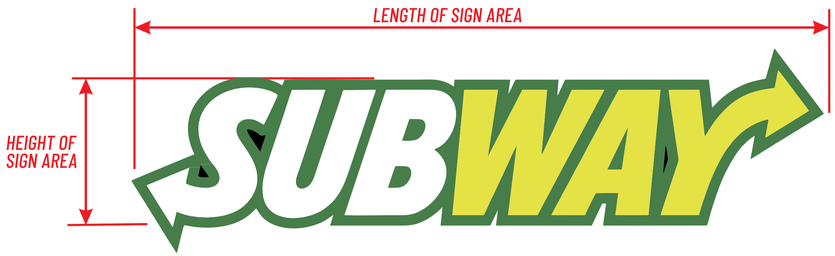

HEIGHT X LENGTH OF A = SIGN AREA SQUARE FOOTAGE
HEIGHT X LENGTH OF B = SIGN AREA SQUARE FOOTAGE
HEIGHT X LENGTH OF C = SIGN AREA SQUARE FOOTAGE

A + B + C = TOTAL SIGN AREA SQUARE FOOTAGE

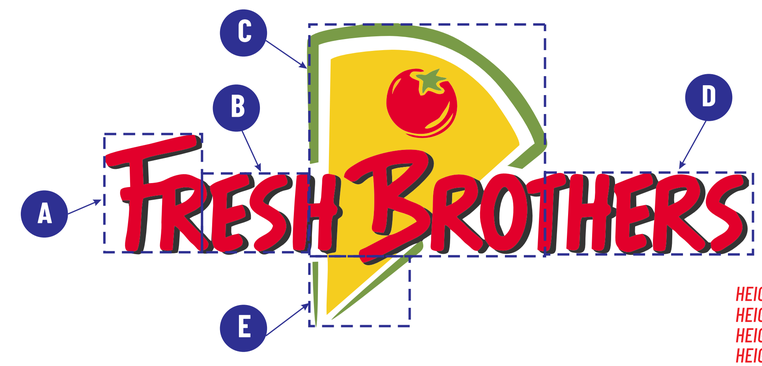

HEIGHT X LENGTH OF A = SIGN AREA SQUARE FOOTAGE
HEIGHT X LENGTH OF B = SIGN AREA SQUARE FOOTAGE
HEIGHT X LENGTH OF C = SIGN AREA SQUARE FOOTAGE
HEIGHT X LENGTH OF D = SIGN AREA SQUARE FOOTAGE
HEIGHT X LENGTH OF E = SIGN AREA SQUARE FOOTAGE

A + B + C + D + E = TOTAL SIGN AREA SQUARE FOOTAGE

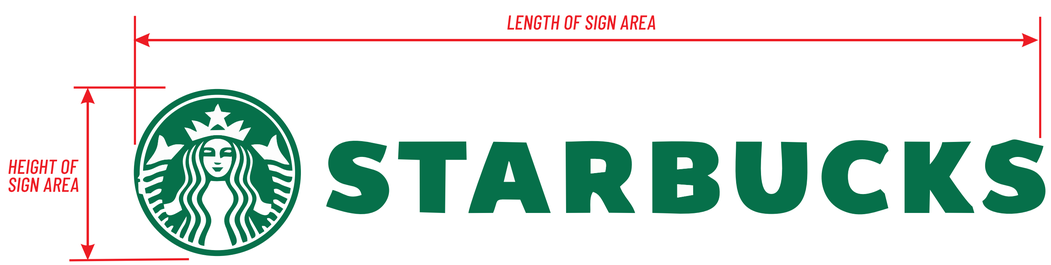

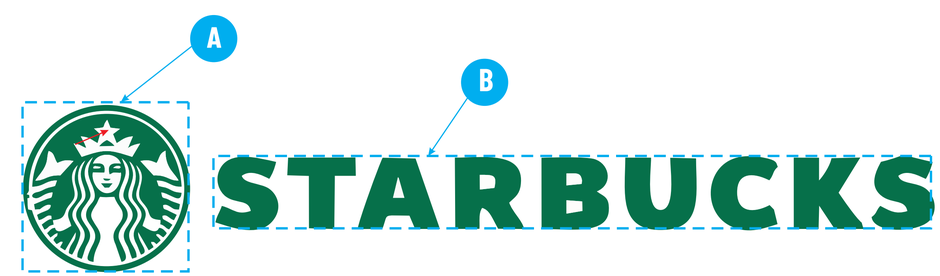

HEIGHT X LENGTH OF A = SIGN AREA SQUARE FOOTAGE
HEIGHT X LENGTH OF B = SIGN AREA SQUARE FOOTAGE

A + B = TOTAL SIGN AREA SQUARE FOOTAGE

TYPICAL MEASURE FOR SQUARE FOOTAGE

SCALE: NTS

PRECISE SIGN COMPANY

107 SOUTH 57TH DRIVE
PHOENIX, AZ 85043
t 602.278.2906
e. amanda@precisesign.com
www.precisesign.com

PROJECT NAME: **35979 GARY ROAD**
PROJECT ADDRESS: 35979 N GARY ROAD SAN TAN VALLEY, AZ 85143

DATE:	11 07 2023
PAGE SIZE:	34 X 22
SR ACCT MNGR:	AMANDA LAURIDSEN
COORDINATOR:	AMANDA LAURIDSEN
DESIGNER:	BRUCE DANIELS

OWNER/LANDLORD APPROVAL
COPY · COLORS · SIZES
PRECISE SIGN COMPANY does NOT provide primary electrical power to sign locations - responsibility of others.
Owner/Landlord Signature Date

OWNER/LANDLORD APPROVAL
Owner/Landlord Signature Date

This drawings are property of PRECISE SIGN COMPANYand cannot be reproduced in whole or in part, without prior written approval.

JOB NUMBER
PS11012023

SHEET
7

©20237, PRECISE SIGN COMPANY

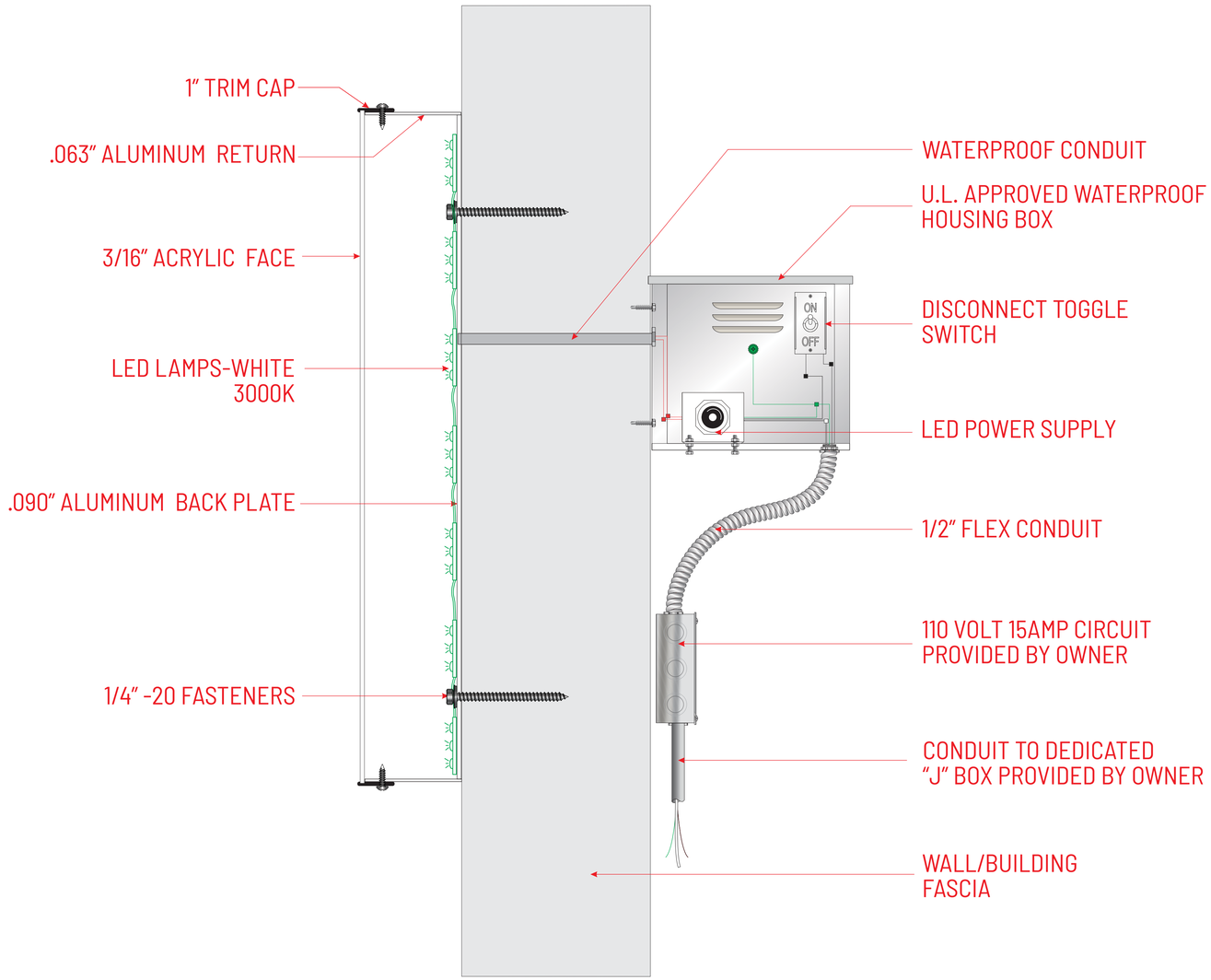

LETTER SECTION DETAIL

SCALE: NTS

P R E C I S E S I G N C O M P A N Y

precise sign co.

107 SOUTH 57TH DRIVE
PHOENIX, AZ 85043
t 602.278.2906
e. amanda@precisesign.com
www.precisesign.com

PROJECT NAME:
35979 GARY ROAD

PROJECT ADDRESS:
35979 N GARY ROAD
SAN TAN VALLEY, AZ 85143

DATE:	11 07 2023
PAGE SIZE:	34 X 22
SR ACCT MNGR:	AMANDA LAURIDSEN
COORDINATOR:	AMANDA LAURIDSEN
DESIGNER:	BRUCE DANIELS

OWNER/LANDLORD APPROVAL
COPY · COLORS · SIZES
PRECISE SIGN COMPANY does NOT provide primary electrical power to sign locations - responsibility of others.

Owner/Landlord Signature Date

OWNER/LANDLORD APPROVAL

Owner/Landlord Signature Date

This drawings are property of PRECISE SIGN COMPANYand cannot be reproduced in whole or in part, without prior written approval.

JOB NUMBER
PS11012023

SHEET
8

©20238, PRECISE SIGN COMPANY

SIGN SQUARE FOOTAGE

HEIGHT X LENGTH OF A =	18.77
HEIGHT X LENGTH OF B =	38.82
HEIGHT X LENGTH OF C =	.20
HEIGHT X LENGTH OF D =	18.87
TOTAL SQUARE FOOTAGE =	76.66

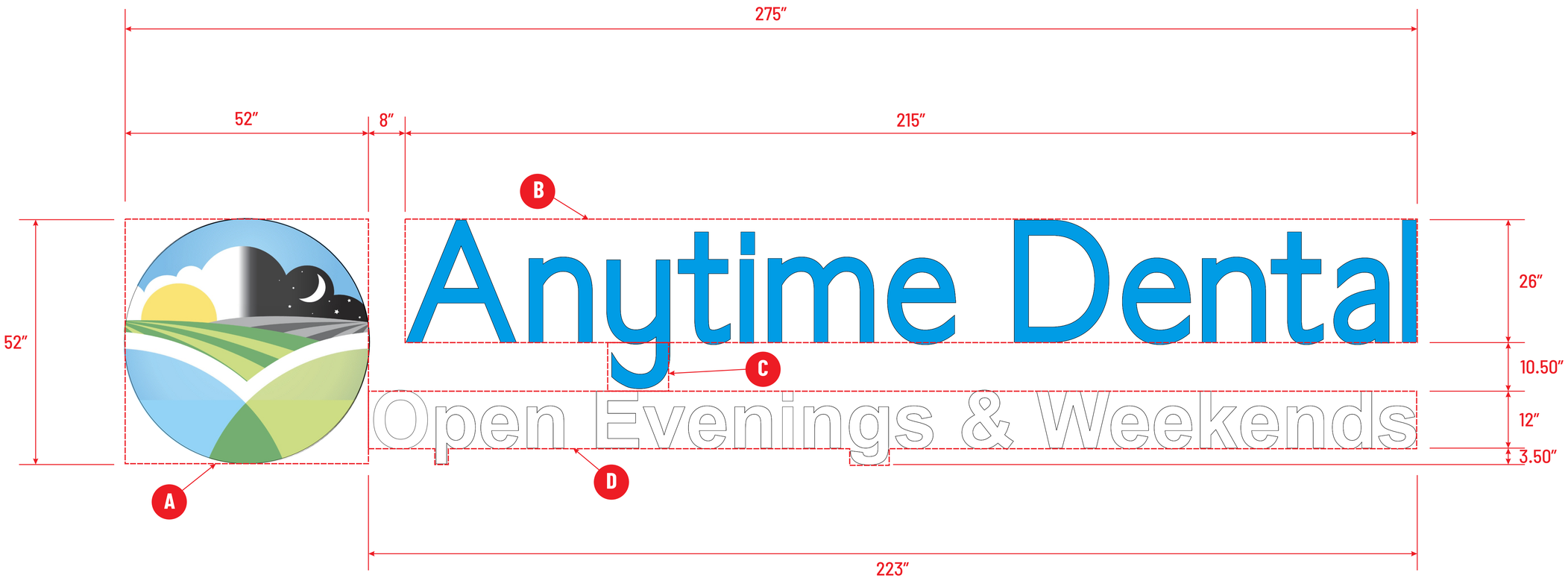

TENANT SIGN LOCATION 1A & 1B

SCALE: 1″ = 1'-0″

P R E C I S E S I G N C O M P A N Y

precise sign co.

107 SOUTH 57TH DRIVE
PHOENIX, AZ 85043
t 602.278.2906
e. amanda@precisesign.com
www.precisesign.com

PROJECT NAME:
35979 GARY ROAD
PROJECT ADDRESS:
35979 N GARY ROAD
SAN TAN VALLEY, AZ 85143

DATE:	11 07 2023
PAGE SIZE:	34 X 22
SR ACCT MNGR:	AMANDA LAURIDSEN
COORDINATOR:	AMANDA LAURIDSEN
DESIGNER:	BRUCE DANIELS

OWNER/LANDLORD APPROVAL
COPY · COLORS · SIZES
PRECISE SIGN COMPANY does NOT provide primary electrical power to sign locations - responsibility of others.
Owner/Landlord Signature Date

OWNER/LANDLORD APPROVAL
Owner/Landlord Signature Date

This drawings are property of PRECISE SIGN COMPANYand cannot be reproduced in whole or in part, without prior written approval.

JOB NUMBER
PS11012023

SHEET
9

©20239, PRECISE SIGN COMPANY

Casa Grande Dispatch

AFFIDAVIT OF PUBLICATION

State of Florida, County of Orange, ss:

Yuade Moore, being first duly sworn, deposes and says: That (s)he is a duly authorized signatory of Column Software, PBC, duly authorized agent of Casa Grande Dispatch, a newspaper published at Casa Grande, Pinal County, Arizona, Tuesday, Thursday, and Saturday of each week; that a notice, a full, true and complete printed copy of which is hereunto attached, was printed in the regular edition of said newspaper, and not in a supplement thereto, for 1 issues. The publications thereof having been on the following dates:

PUBLICATION DATES:
Feb. 17, 2024

NOTICE ID: 0tnAaje7ZHQ4PcrjqQrD
NOTICE NAME: CSR-009-23 – PUBLIC HEARING
Publication Fee: 84.11

(Signed) Yuade Moore

VERIFICATION

State of Florida
County of Orange

PAMELA BAEZ
Notary Public - State of Florida
Commission # HH 186700
Expires on October 14, 2025

Subscribed in my presence and sworn to before me on this: 02/20/2024

Notary Public
Notarized remotely online using communication technology via Proof.

NOTICE OF PUBLIC HEARING BY THE PINAL COUNTY BOARD OF SUPERVISORS AT 9:30 A.M. ON THE 6th DAY OF MARCH 2024, AT THE PINAL COUNTY ADMINISTRATIVE COMPLEX, IN THE BOARD OF SUPERVISORS HEARING ROOM, 135 N. PINAL STREET, FLORENCE, ARIZONA, TO CONSIDER AN APPLICATION FOR A COMPREHENSIVE SIGN PACKAGE IN THE UNINCORPORATED AREA OF PINAL COUNTY, ARIZONA.

CSR-009-23 – PUBLIC HEARING/ACTION: Clark Larson, Owner, and Amanda Lauridsen – Precise Sign Co. LLC, applicant/agent, requesting approval of a Comprehensive Sign Package to allow the installation of two (2) monument signs and eight (8) wall signs with a maximum area of 76.66 square feet per sign, on a 1.22± acre parcel in the CB-1 Local Business Zone; tax parcel 104-22-013N (legal on file); situated in a portion of Section 31, Township 2 South, Range 8 East, of the Gila & Salt River Base & Meridian, Pinal County, Arizona, located on the northeast corner of N Gary Rd and W Empire Rd in San Tan Valley.

ALL PERSONS INTERESTED IN THIS MATTER MAY APPEAR AND SPEAK AT THE PUBLIC HEARING AT THE DATE, TIME, AND PLACE DESIGNATED ABOVE.

DOCUMENTS PERTAINING TO THIS CASE CAN BE FOUND ON THE NOTICE OF HEARING PAGE FOR THE P&Z COMMISSION AT: http://pinalcountyaz.gov/CommunityDevelopment/Planning/Pages/NoticeofHearing.aspx#

DATED THIS 13th DAY OF FEBRUARY 2024, by Pinal County Development Services.

TO QUALIFY FOR FURTHER NOTIFICATION IN THIS LAND USE MATTER YOU MUST FILE WITH THE PLANNING DEPARTMENT A WRITTEN STATEMENT OF SUPPORT OR OPPOSITION TO THE SUBJECT APPLICATION. YOUR STATEMENT MUST CONTAIN THE FOLLOWING INFORMATION:

1) Planning Case Number (see above)
2) Your name, address, telephone number and property tax parcel number (Print or type)
3) A brief statement of reasons for supporting or opposing the request
4) Whether or not you wish to appear and be heard at the hearing

WRITTEN STATEMENTS MUST BE FILED WITH: PINAL COUNTY COMMUNITY DEVELOPMENT DEPARTMENT PO BOX 749 (85 N. FLORENCE STREET) FLORENCE, AZ 85132

Contact for this matter: Patrick Roberts, Senior Planner E-mail address: patrick.roberts@pinal.gov Phone # (520) 866-6409

Published 2/17/24

PINAL COUNTY
WIDE OPEN OPPORTUNITY

CSR-009-23

PINAL COUNTY BOARD OF SUPERVISORS

3/6/2024

Community Development Department

CSR-009-23

PINAL COUNTY
WIDE OPEN OPPORTUNITY

- **Proposal:**
  - *This is a comprehensive sign package to allow installation of two monument signs and eight wall signs with a sign area maximum of 76.66 sq. ft. per sign within a commercial complex. The applicant is pursuing this sign package to provide commercial tenants with larger signs than the sign code currently permits.*

CSR-009-23

PINAL COUNTY
WIDE OPEN OPPORTUNITY

- **Location:** The subject site is located on the Northeast corner of N Gary Road and W Empire Road in San Tan Valley.
- **Landowners:** Clark Larson
- **Applicant:** Amanda Lauridsen – Precise Sign Co.

County Map

PINAL COUNTY
WIDE OPEN OPPORTUNITY

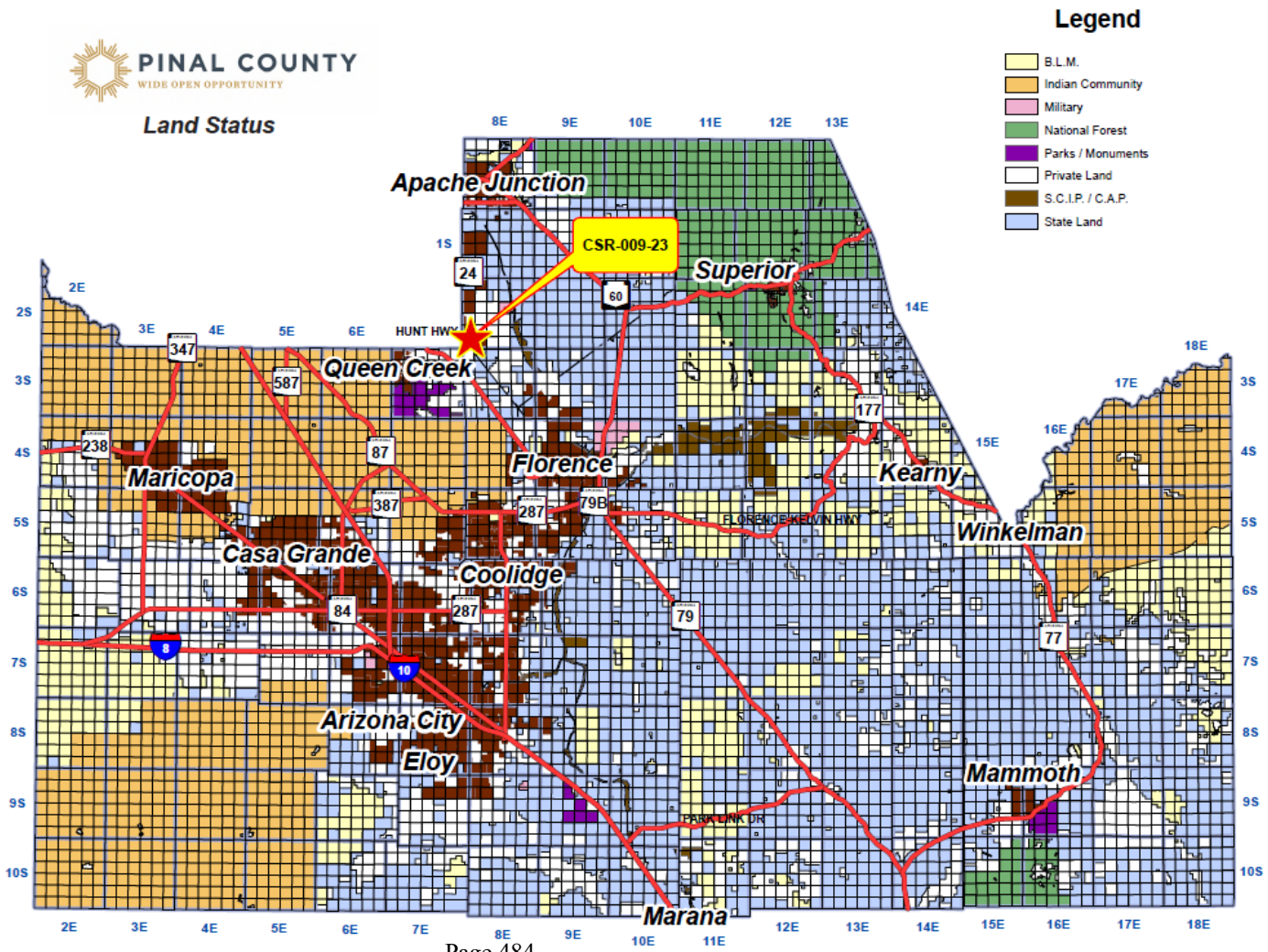

Vicinity Map

PINAL COUNTY
WIDE OPEN OPPORTUNITY

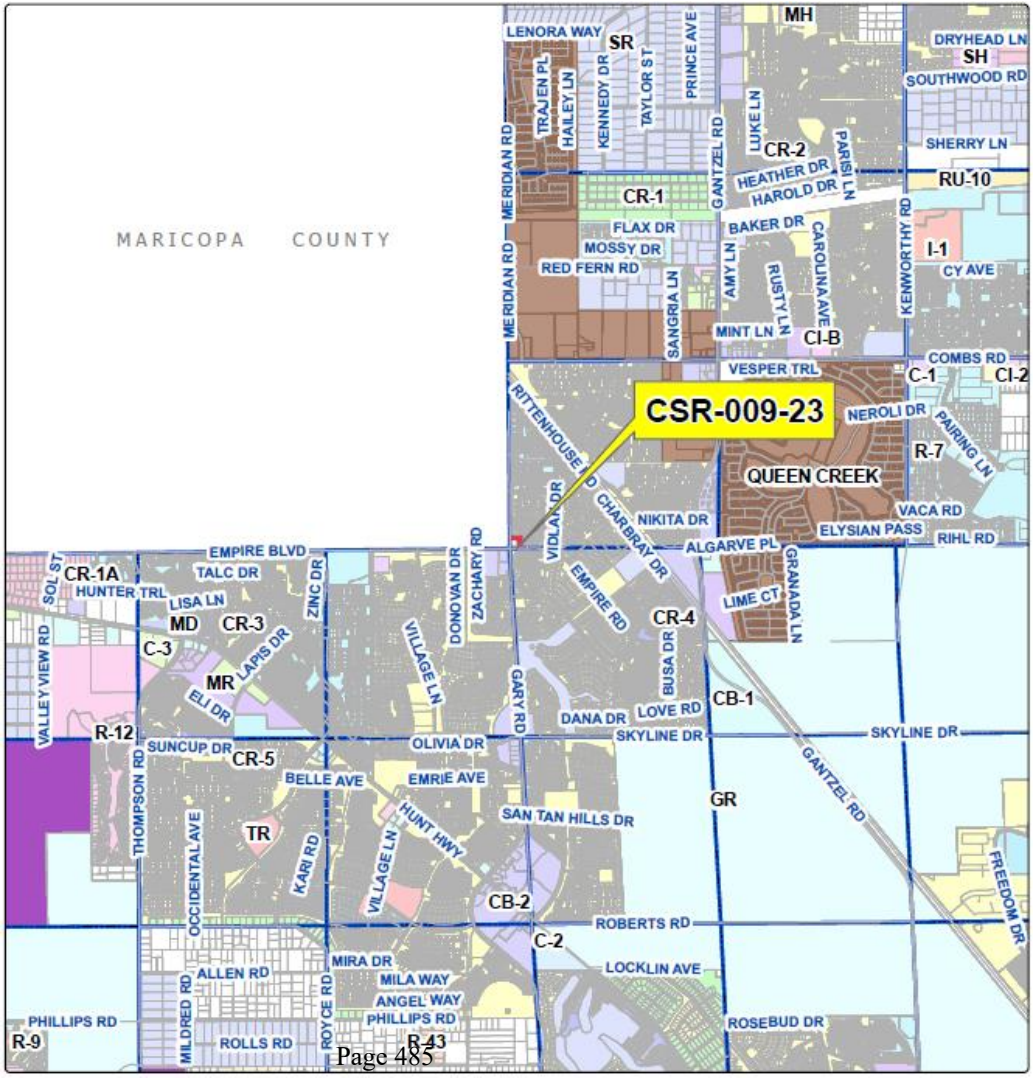

Aerial Map

PINAL COUNTY
WIDE OPEN OPPORTUNITY

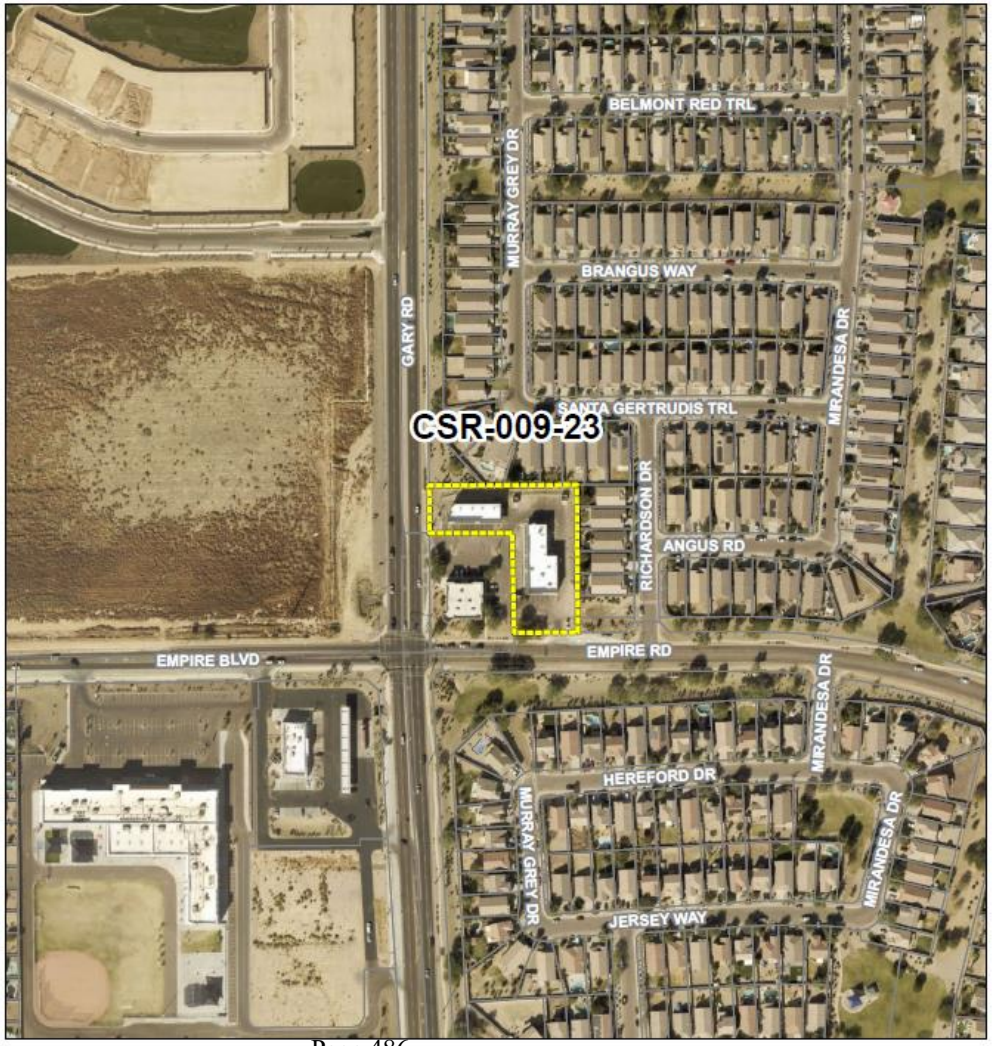

CSR-009-23

PINAL COUNTY
WIDE OPEN OPPORTUNITY

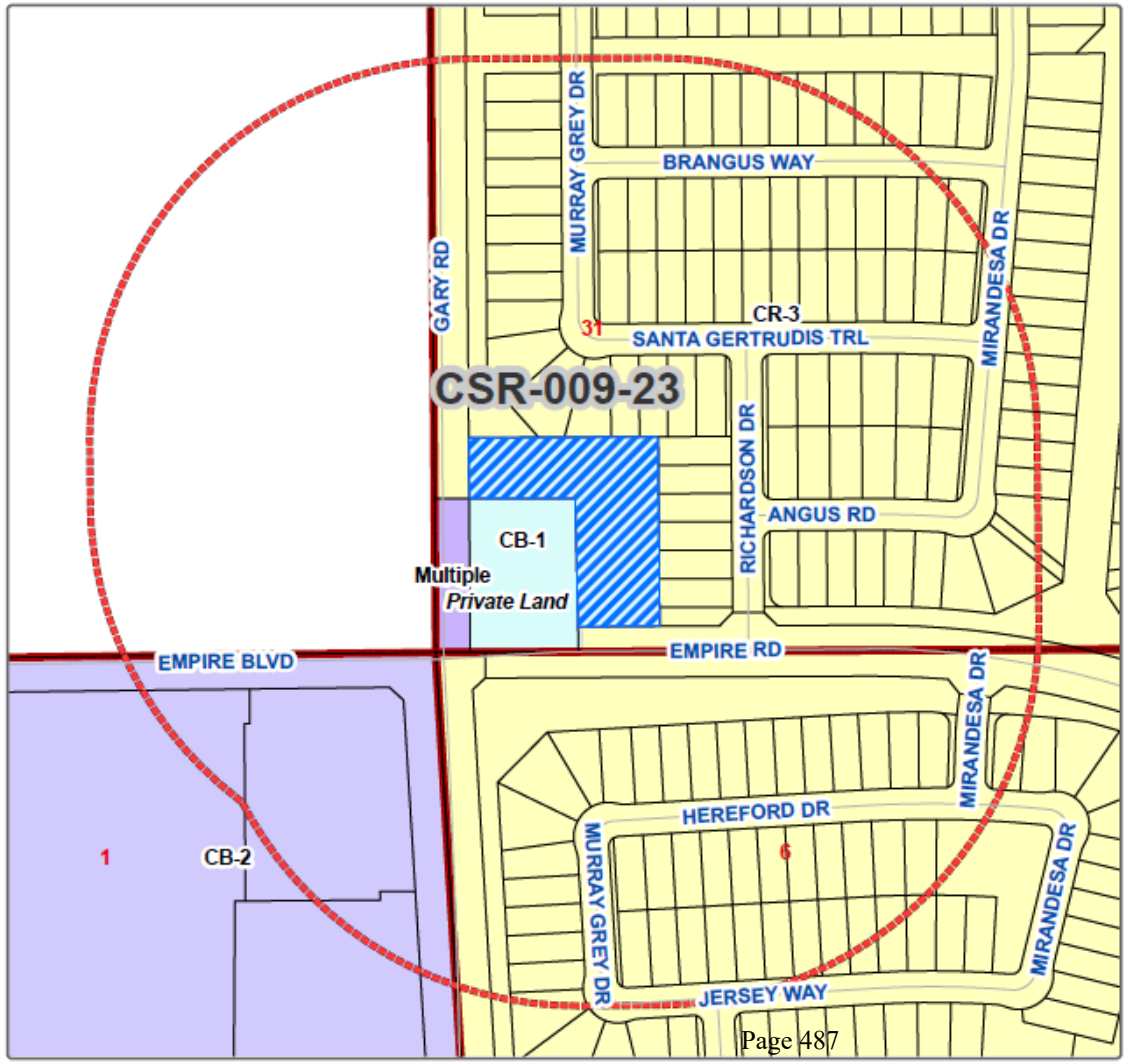

Current Zoning of Parcel:

CB-1

CSR-009-23

PINAL COUNTY
WIDE OPEN OPPORTUNITY

SIGN LOCATIONS

M-1 MONUMENT SIGN
T-1 TENANT ILLUMINATED LETTERS

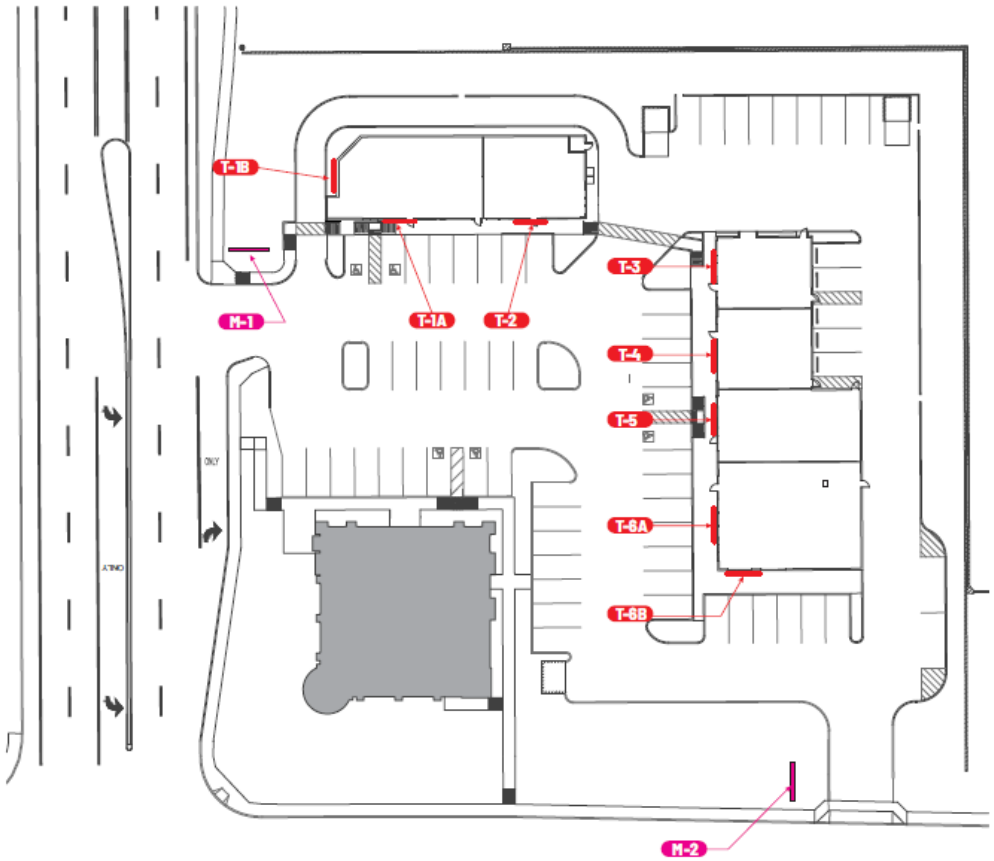

SIGN LOCATIONS - BUILING A & B
SCALE: NTS

CSR-009-23

PINAL COUNTY
WIDE OPEN OPPORTUNITY

SIGN SQUARE FOOTAGE

HEIGHT X LENGTH OF A =	18.77
HEIGHT X LENGTH OF B =	38.82
HEIGHT X LENGTH OF C =	.20
HEIGHT X LENGTH OF D =	18.87
TOTAL SQUARE FOOTAGE =	76.66

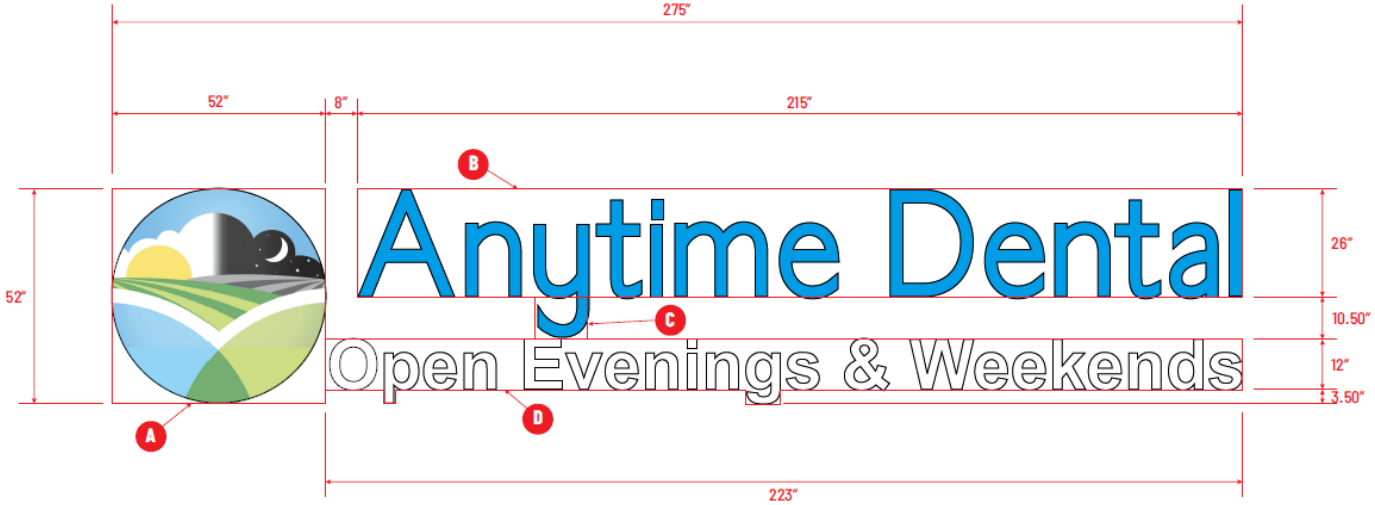

CSR-009-23

PINAL COUNTY
WIDE OPEN OPPORTUNITY

CSR-009-23

PINAL COUNTY
WIDE OPEN OPPORTUNITY

SPECIFICATIONS

DESCRIPTION: SITE MONUMENT
DIMENSIONS: 60" W X 60"H
MATERIAL: ALUMINUM
FONT: MANIFOLD
CORNERS: NONE
BRAILLE: SQUARE
MOUNTING: CONCRETE FOOTINGS
QUANTITY: 2
NOTES:

COLOR KEY

BLACK - RAL9005-JET BLACK

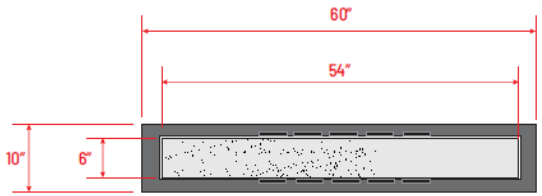

SITE MONUMENT SIGN - TOP VIEW
SCALE: 1 1/2" = 1'-0"

GENERAL NOTE:
ALL DRAWINGS IN THIS DOCUMENT ARE ACCURATE FOR SIZE AND GRAPHIC LAYOUTS

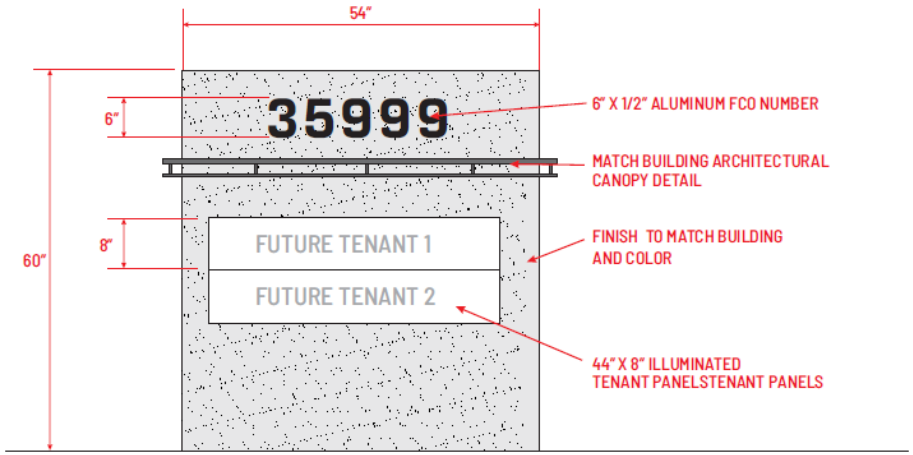

SITE MONUMENT SIGN M-1 - FRONT ELEVATION
SCALE: 1 1/2" = 1'-0"

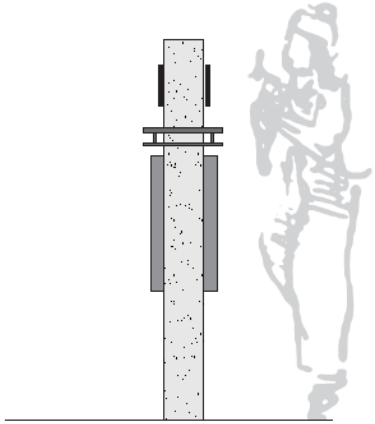

SITE MONUMENT SIGN - SIDE VIEW
SCALE: 1 1/2" = 1'-0"

CSR-009-23

PINAL COUNTY
WIDE OPEN OPPORTUNITY

SPECIFICATIONS

DESCRIPTION: SITE MONUMENT
DIMENSIONS: 60" W X 60"H
MATERIAL: ALUMINUM
FONT: MANIFOLD
CORNERS: NONE
BRAILLE: SQUARE
MOUNTING: CONCRETE FOOTINGS
QUANTITY: 2
NOTES:

COLOR KEY

BLACK - RAL9005-JET BLACK

GENERAL NOTE:
ALL DRAWINGS IN THIS DOCUMENT ARE ACCURATE FOR SIZE AND GRAPHIC LAYOUTS

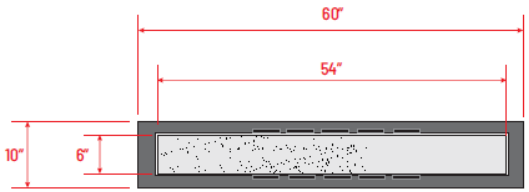

SITE MONUMENT SIGN - TOP VIEW
SCALE: 1 1/2" = 1'-0"

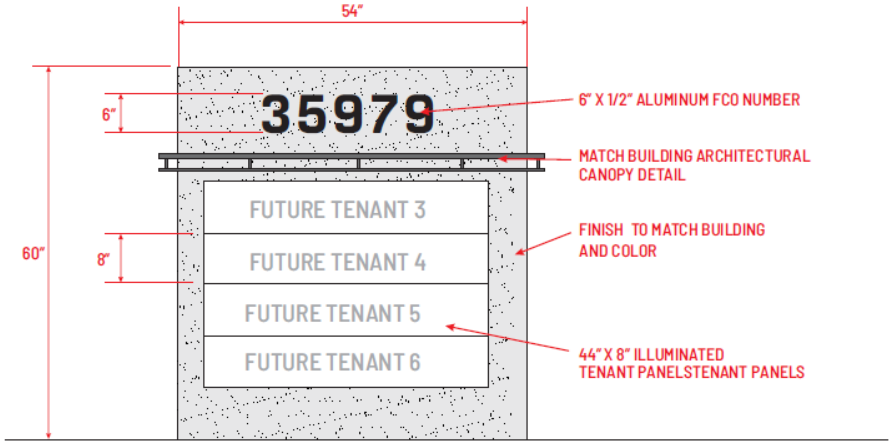

SITE MONUMENT SIGN M-2 - FRONT ELEVATION
SCALE: 1 1/2" = 1'-0"

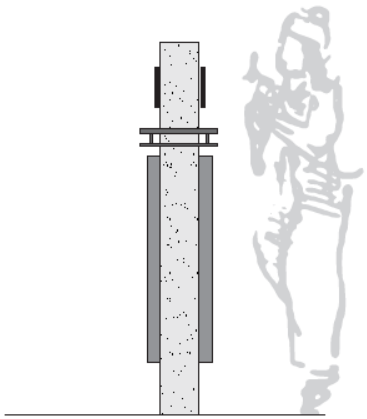

SITE MONUMENT SIGN - SIDE VIEW
SCALE: 1 1/2" = 1'-0"

CSR-009-23

PINAL COUNTY
WIDE OPEN OPPORTUNITY

BUILDING A ELEVATIONS

SOUTH ELEVATION

SCALE: 3/16" = 1'-0"

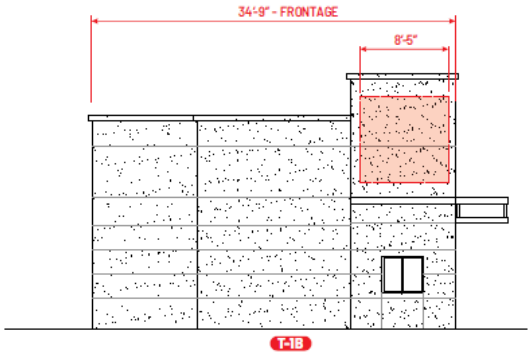

WEST ELEVATION

SCALE: 3/16" = 1'-0"

CSR-009-23

PINAL COUNTY
WIDE OPEN OPPORTUNITY

BUILDING B ELEVATIONS

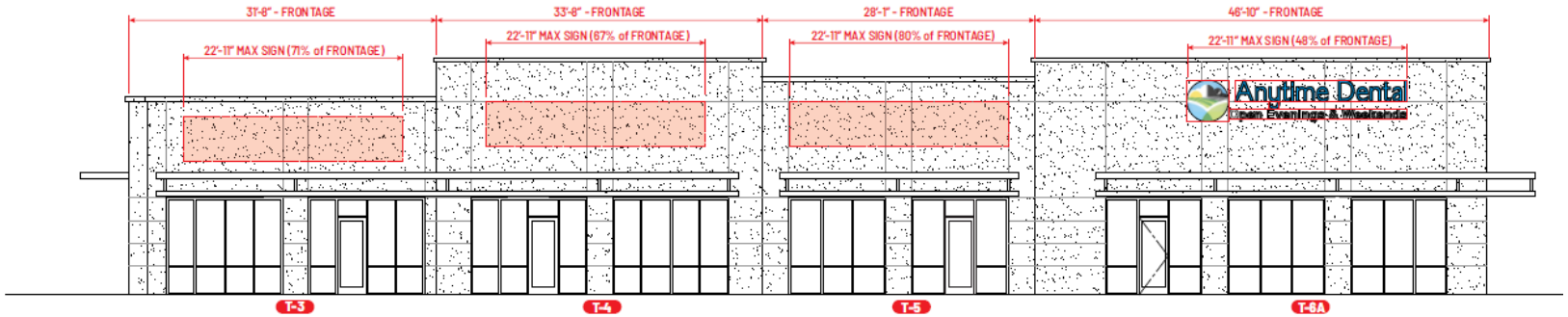

WEST ELEVATION

SCALE: 3/16" = 1'-0"

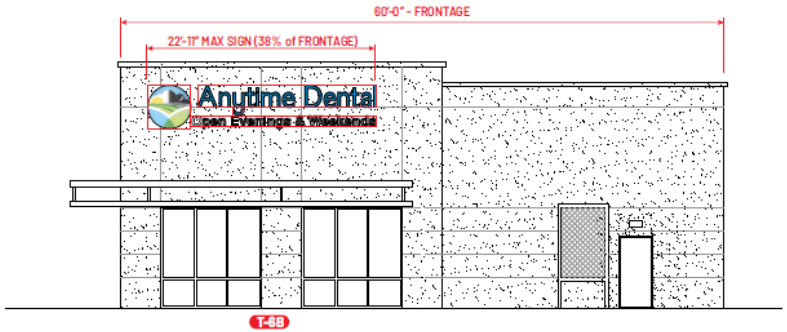

SOUTH ELEVATION

SCALE: 3/16" = 1'-0"

North

PINAL COUNTY
WIDE OPEN OPPORTUNITY

South

PINAL COUNTY
WIDE OPEN OPPORTUNITY

South

PINAL COUNTY
WIDE OPEN OPPORTUNITY

East

PINAL COUNTY
WIDE OPEN OPPORTUNITY

East

PINAL COUNTY
WIDE OPEN OPPORTUNITY

West

PINAL COUNTY
WIDE OPEN OPPORTUNITY

West

PINAL COUNTY
WIDE OPEN OPPORTUNITY

CSR-009-23

PINAL COUNTY
WIDE OPEN OPPORTUNITY

- **Items for Board of Supervisors Consideration:**
  - Current amount of signage permitted per business in this zoning is 48 square feet of area per business.
  - Applicant would like to provide 76.66 square feet of signage area per business. This could potentially offer 613.28 square feet of total signage.
  - This request is for a 60% increase in allowed sign area for wall signs. Sign area increases over 25% require a Comprehensive Sign Package and requires approval from the Board of Supervisors.
  - Staff has received no comments of opposition or support.

CSR-009-23

PINAL COUNTY
WIDE OPEN OPPORTUNITY

- Staff recommends **Approval** of CSR-009-23 as presented with no stipulations.

PINAL COUNTY
WIDE OPEN OPPORTUNITY

AGENDA ITEM

March 6, 2024 ADMINISTRATION BUILDING A
FLORENCE, ARIZONA

REQUESTED BY:

Funds #:

Dept. #: 1030

Dept. Name: Community Development

Director: Brent Billingsley

BRIEF DESCRIPTION OF AGENDA ITEM AND REQUESTED BOARD ACTION:

Public Hearing and discussion/approval/disapproval of Resolution No. 2024-SUP-029-23, a Resolution approving case SUP-029-23, Goldfield Ghost Town & Mine Tours INC, owner, Scott Hopper, applicant/agent, requesting approval of a Special Use Permit to continue to operate a wireless communication facility, on a 5.0± acre parcel in the CB-2 General Business Zone; tax parcel 100-02-0370 (legal on file); situated in a portion of Section 1, Township 1 North, Range 8 East, Pinal County, Arizona, located northwest of E Apache Trail and E Mammoth Mine Rd in an unincorporated area of Pinal County. The Planning Commission recommended approval (8 to 0) of case SUP-029-23 with fifteen (15) stipulations. Supervisor District #5. (Glenn Bak/Brent Billingsley)

BRIEF DESCRIPTION OF THE FISCAL CONSIDERATIONS AND/OR EXPECTED FISCAL IMPACT OF THIS AGENDA ITEM:

BRIEF DESCRIPTION OF THE EXPECTED PERFORMANCE IMPACT OF THIS AGENDA ITEM:

MOTION:

Approve as presented with 15 stipulations

History

Time	Who	Approval
2/22/2024 5:50 PM	County Attorney	Yes
2/23/2024 11:21 AM	County Manager	Yes
2/26/2024 10:25 AM	Clerk of the Board	Yes

ATTACHMENTS:

Click to download

- Power Point
- Packet
- Resolution 2024 SUP-029-23

BOARD OF SUPERVISORS

PINAL COUNTY
WIDE OPEN OPPORTUNITY

SUP-029-23

3/6/24

Community Development Department

SUP-029-23

PINAL COUNTY
WIDE OPEN OPPORTUNITY

- Proposal:
  - Special Use Permit request to continue to maintain a Wireless Communication Facility.
- Size:
  - 5.0 ± acres
- Location:
  - Northwest of E Apache Trail and E Mammoth Mine Rd.
- Owner/Applicant:
  - Goldfield Ghost Town & Mine Tours INC, Owner, Scott Hopper, Applicant

Location Map

PINAL COUNTY
WIDE OPEN OPPORTUNITY

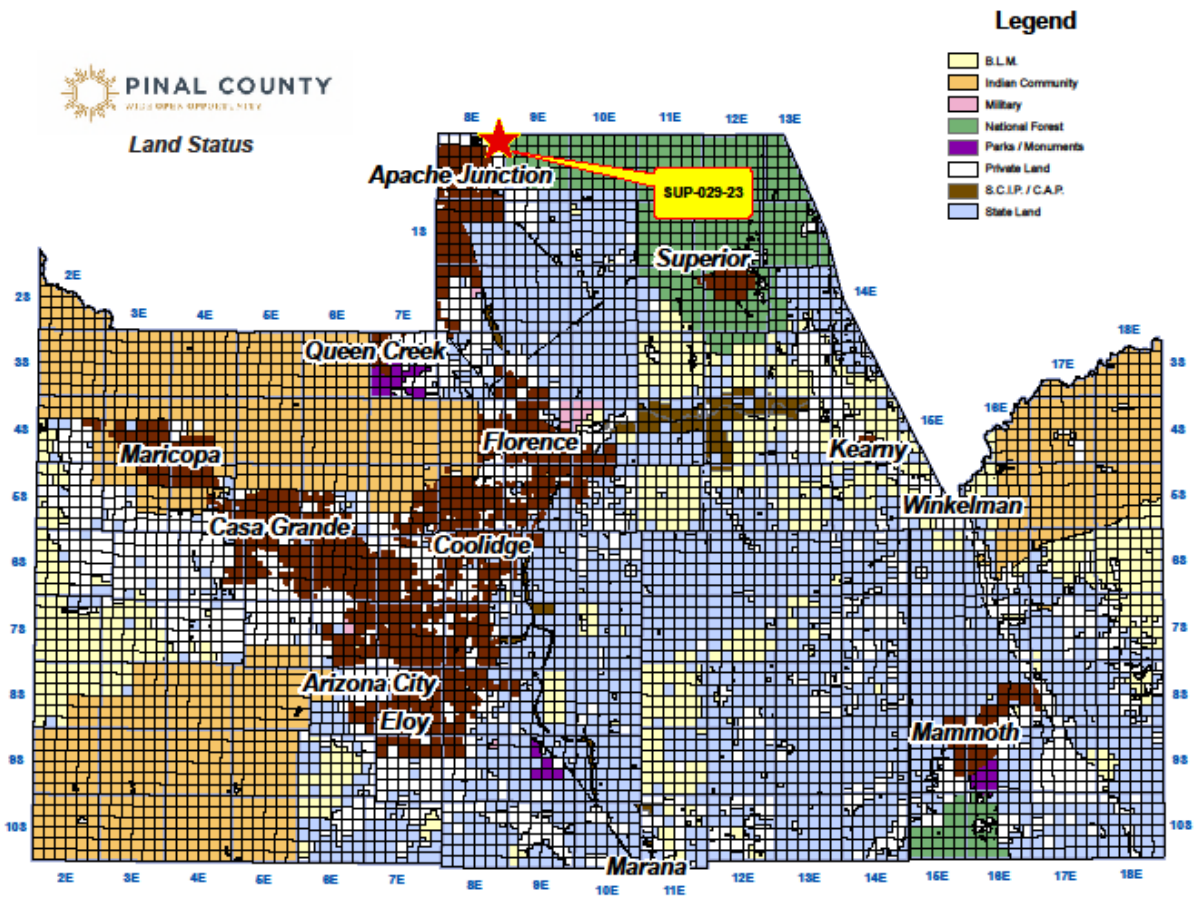

Case/Zoning Map

PINAL COUNTY
WIDE OPEN OPPORTUNITY

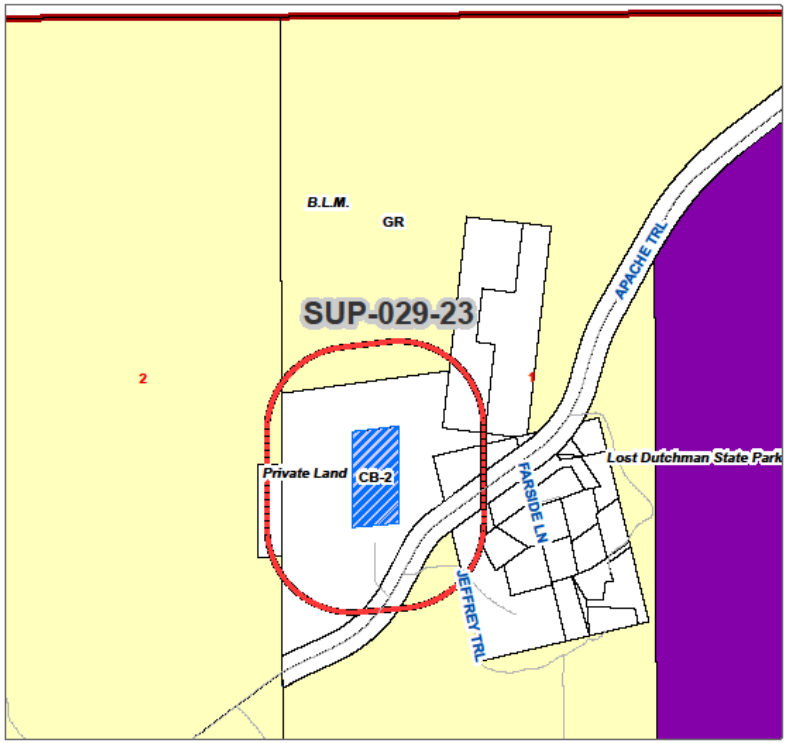

Community Development

SUP-029-23 – PUBLIC HEARING/ACTION: Goldfield Ghost Town & Mine Tours INC, property owner, Scott Hopper, applicant/agent, requesting approval of a Special Use Permit to continue to operate a wireless communication facility, on a 5.00± acre parcel in the CB-2 General Business Zone; tax parcel 100-02-0370 (legal on file); situated in a portion of Section 1, Township 1 North, Range 8 East, Pinal County, Arizona, located northwest of E Apache Trail and E Mammoth Mine Rd. in an unincorporated area of Pinal County.

Current Zoning: CB-2	Requested Zoning: Rezone	Current Land Use: Recreation/Conservation

PINAL COUNTY

Legal Description:

Situated in a portion of Section 1, Township 1 North, Range 8 East, Pinal County, Arizona, located northwest of E Apache Trail and E Mammoth Mine Rd. in an unincorporated area of Pinal County.

SEC 01, TWN 01N, RNG 08E

Sheet No.	Drawn By:	Date:
1 of 1	GIS / IT /SAH	12/11/2023
	Section 01 / Township 01N / Range 08E	
	Case Number: SUP-029-23	

Aerial Map

PINAL COUNTY
WIDE OPEN OPPORTUNITY

Community Development

Site Plan

PINAL COUNTY
WIDE OPEN OPPORTUNITY

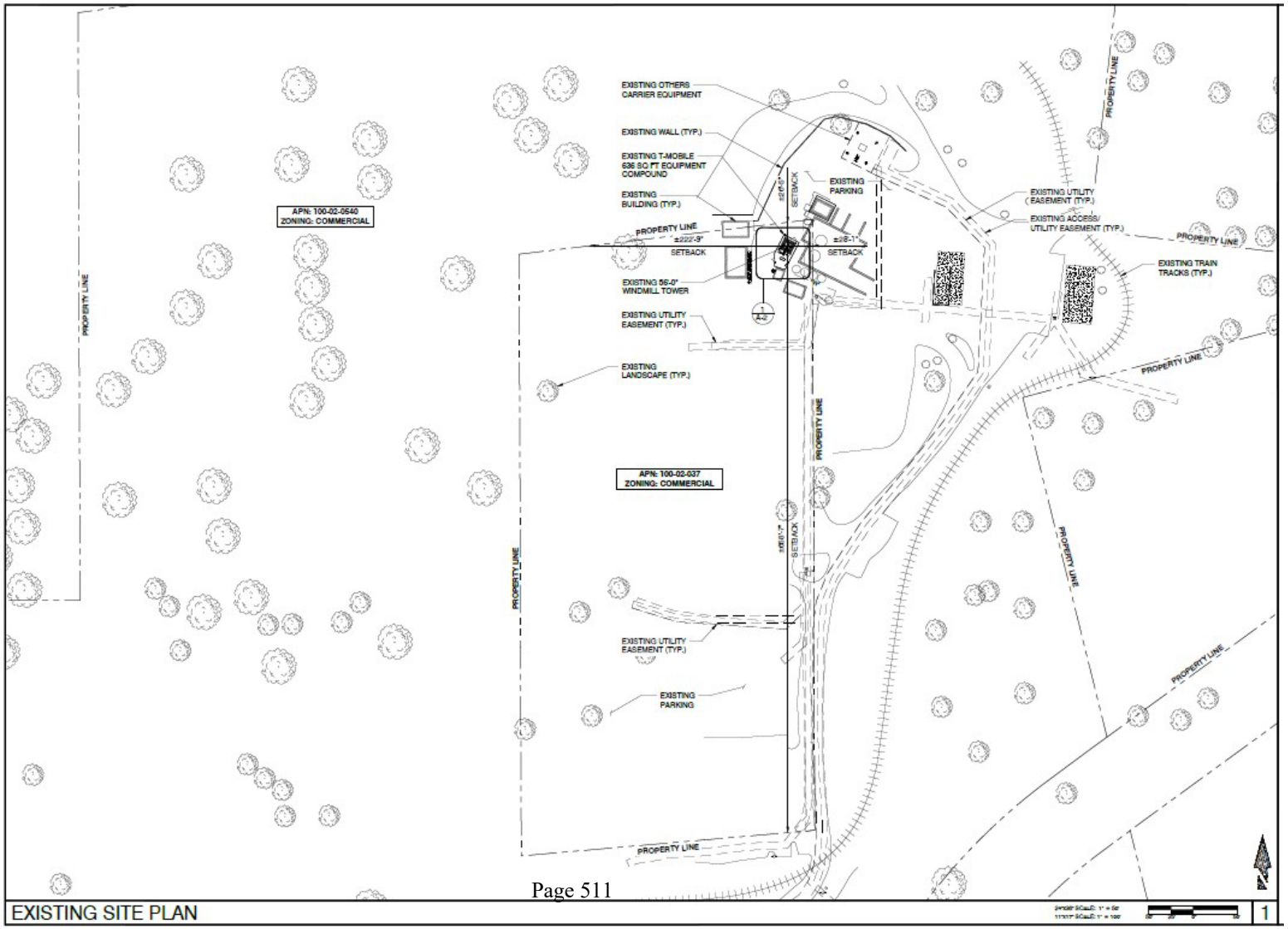

Elevation

PINAL COUNTY
WIDE OPEN OPPORTUNITY

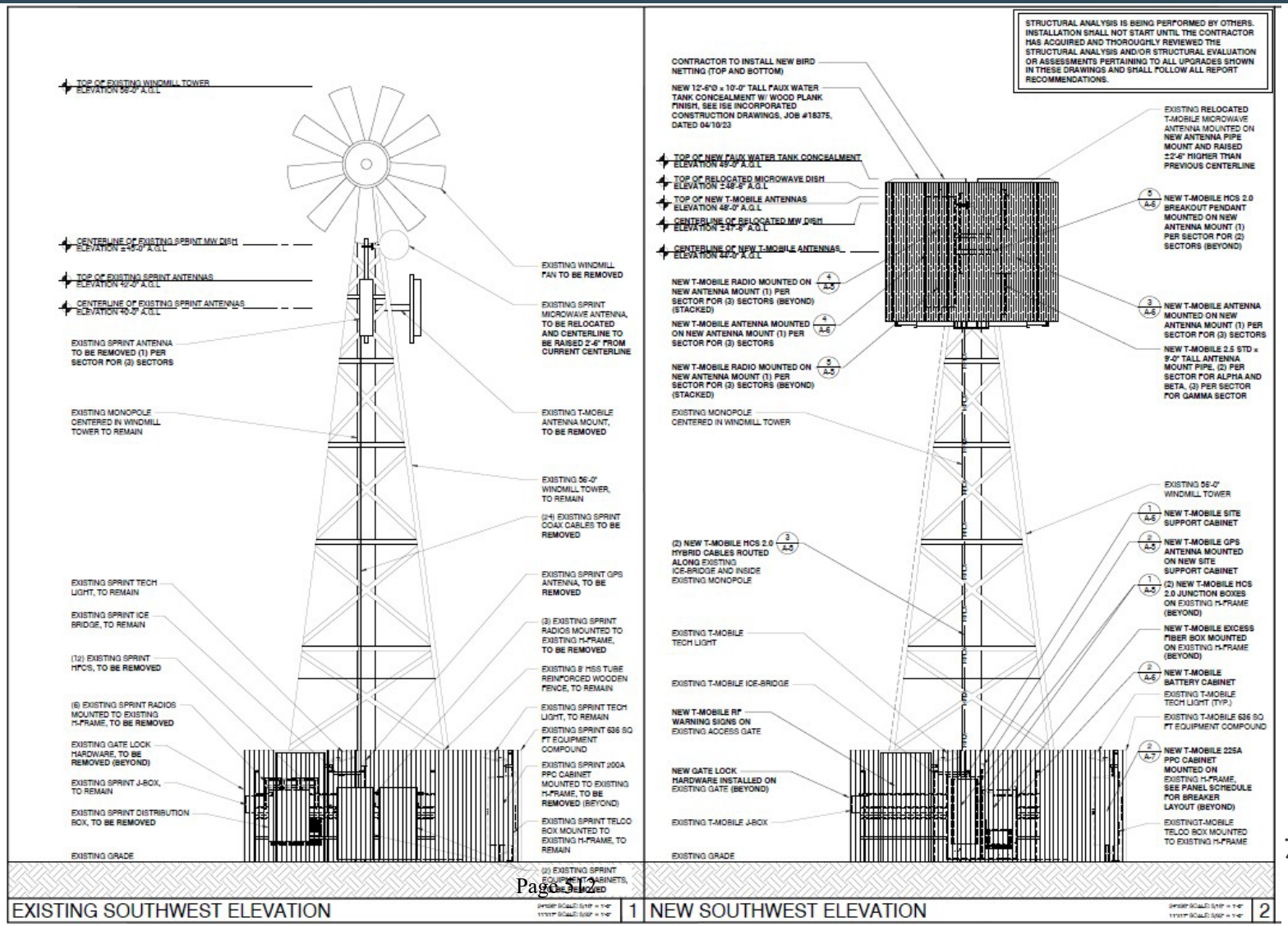

North

PINAL COUNTY
WIDE OPEN OPPORTUNITY

South

PINAL COUNTY
WIDE OPEN OPPORTUNITY

East

PINAL COUNTY
WIDE OPEN OPPORTUNITY

West

PINAL COUNTY
WIDE OPEN OPPORTUNITY

2011 Photo

PINAL COUNTY
WIDE OPEN OPPORTUNITY

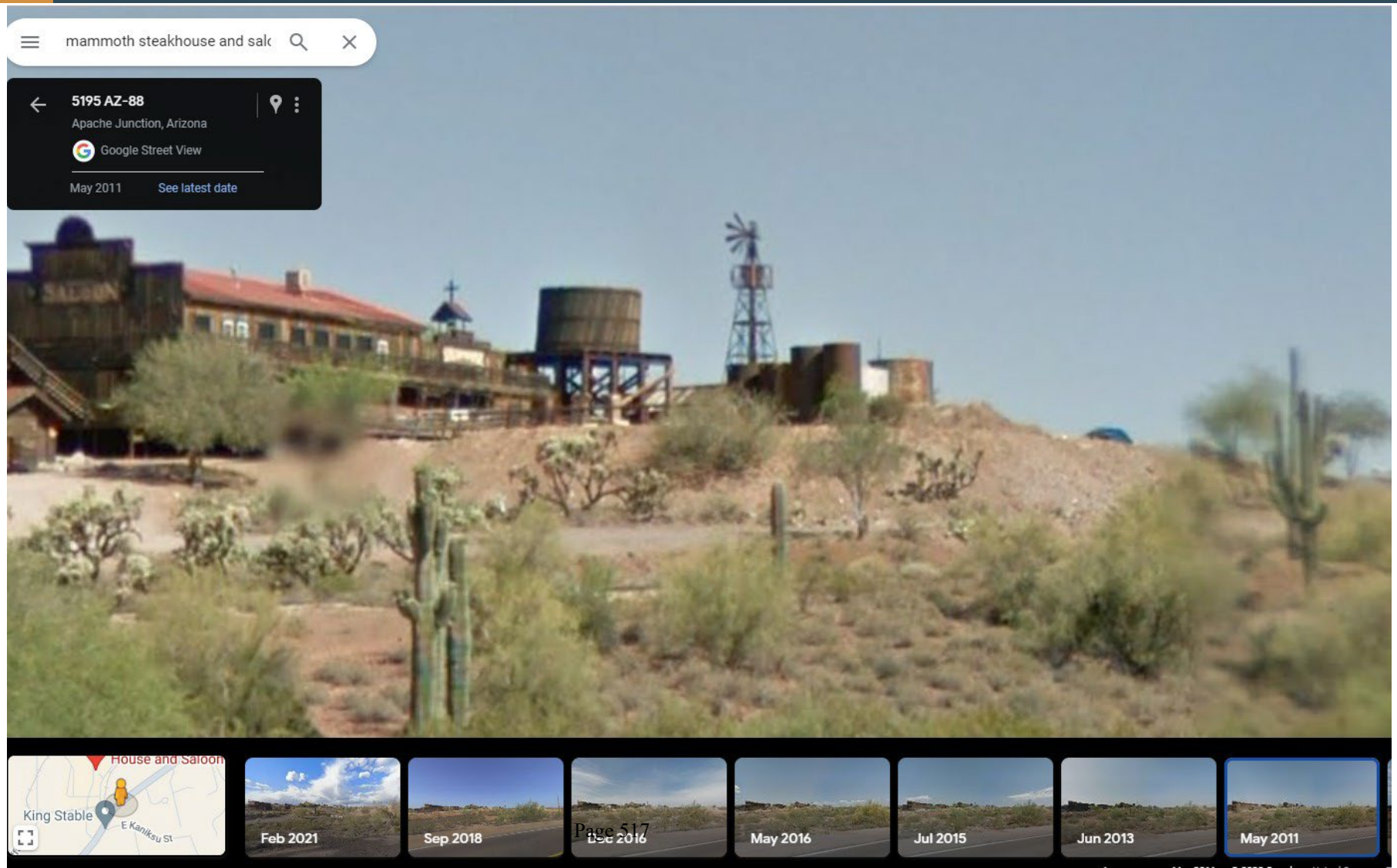

Items of Consideration

PINAL COUNTY
WIDE OPEN OPPORTUNITY

- Continued coverage needed for the area.
- WCF has existed since at least 2011.
- Traffic Impacts for WCF are minimal, as only occasional maintenance is required.
- No letters of opposition.

SUP-029-22

PINAL COUNTY
WIDE OPEN OPPORTUNITY

- Recommendation for Approval:
  - 15 Stipulations

MEETING DATE: MARCH 6, 2024

TO: PINAL COUNTY BOARD OF SUPERVISORS

CASE NO.: **SUP-029-23 (MARACA WCF)**

CASE COORDINATOR: GLENN BAK

Executive Summary:
Special Use Permit requesting approval of an existing Wireless Communication Facility (WCF) on an approximately 5.0± acre parcel in the CB-2 - General Business Zone;

If This Request is Approved:
The Special Use Permit would allow antenna modifications and enhanced stealth on an existing Wireless Communication Facility (WCF) to continue to operate on tax parcel 100-02-0370 (legal on file).

Staff Recommendation/Issues for Consideration/Concern:
Staff recommends approval of the request.

LEGAL DESCRIPTION:
Situated in a portion of Section 1, Township 1 North, Range 8 East

TAX PARCELS:
100-02-0370 (legal on file);

LANDOWNER/APPLICANT:
Goldfield Ghost Town & Mine Tours INC, property owner, Scott Hopper, applicant/agent.

REQUESTED ACTION & PURPOSE:
SUP-029-23 – PUBLIC HEARING/ACTION: Goldfield Ghost Town & Mine Tours INC, property owner, Scott Hopper, applicant/agent, requesting approval of a Special Use Permit to continue to operate a wireless communication facility, on a 5.00± acre parcel in the CB-2 General Business Zone; tax parcel 100-02-0370 (legal on file); situated in a portion of Section 1, Township 1 North, Range 8 East, Pinal County, Arizona, located northwest of E Apache Trail and E Mammoth Mine Rd. in an unincorporated area of Pinal County.

SIZE: 5.0 ± acre parcel.

COMPREHENSIVE PLAN: The site is designated as Recreation/Conservation.

EXISTING ZONING AND LAND USE: The property is zoned General Business Zone (CB-2) and the WCF facility is among approximately two dozen structures on the property.

SURROUNDING ZONING AND LAND USE:
North: General Rural Zone (GR) Parking
South: General Rural Zone (GR) Campground & Parking
East: General Rural Zone (GR) Parking
West: General Rural Zone (GR) Vacant

PUBLIC PARTICIPATION:

Neighborhood Meeting:	July 19, 2023
Newspaper Advertising:	December 22, 2023 & February 12, 2024
Site posting, Applicant:	December 19, 2023
Site posting, County:	December 25, 2023 & February 20, 2024

COMMISSION ACTION/RECOMMENDATION (SUP-029-23): At the hearing, after discussion with staff and the Commission, together with evidence presented & public testimony, the Commission voted 8-0, to recommend approval of (SUP-029-23) based upon the record as presented, with the 15 stipulations:

SUP-029-23 STIPULATIONS:

1. All Federal (FCC), State and County regulations shall adhere to and all required approvals, plans, submittal documents, and permits submitted and obtained; including, but not limited to, planning clearance, building, sewage disposal, right-of-way use permit, handling and disposal of waste water, air quality permit, security lighting, fire protection, landscaping, signage, etc.;

2. Submit an R.F. Engineer's certification within thirty days of BOS approval, that the facilities comply with all Federal Aviation Administration (FAA), and that the radiation meets Federal Communication Commission (FCC) requirements. Should interference be determined to exist with the WAPA Communications equipment, building permits shall not be issued until the interference issues are resolved to the satisfaction of Pinal County Community Development;

3. The applicant/property owner shall meet the requirements of the International Fire Code, as adopted by Pinal County and administered by the Pinal County Building Safety Department;

4. A dust registration permit from the Pinal County Air Quality Control District shall be obtained prior to the disturbance of 0.1 acres or more land;

5. All construction activity must conform to the Earthmoving Activity requirements of the Pinal County Air Quality Control District;

6. The above proposed Site Plan should have a paved road access to the project, paved road access with the project and paved parking stall/s, unless not required by Traffic/Public Works Engineer;

7. An Air Quality industrial permit may be required if there is an emergency generator installed with a capacity of 325HP or more and runs 72 hours or more;

8. Access road to the WCF shall be 24' wide per code requirements;

9. One ADA parking space for the facility must be provided on site;

10. With the exception of changes necessary to meet applicable stipulations, the layout, design and set up of the wireless communication facility shall be as shown and set forth on the applicant's site plan as submitted on 08-21-2023;

11. Any new change or new expansion of use shall require approval by the Board of Supervisors under the procedures pursuant to PCDSC 2.150.010 (O);

12. At such time as technology becomes antiquated, the wireless communication facility shall be removed from the subject property at owners expense;

13. The applicant shall keep the property free of trash, litter and debris;

14. Violation of these conditions at any time may invoke revocation proceedings by the Pinal County Community Development Department; and

15. Special use permit is tied to the parcel number 100-02-0370.

Date Prepared: 2/1/24 GB

PINAL COUNTY PLANNING AND ZONING COMMISSION
(PO NUMBER 249810)

Regular Meeting
9:00 a.m.
Thursday, January 18, 2024
Board of Supervisors Hearing Room
135 N. Pinal Street, Florence, Arizona

INDEX:

CALL TO ORDER & ROLL CALL: p. 1

PLANNING MANAGER REPORT: p. 2-3

PRESENTATION:

- **Special Use Permits Category O** – pp. 3-15

CONTINUED CASES:

- **PZ-032-23 & PZ-PD-007-23** (Continued to February 15, 2024) – p. 15

TENTATIVE PLATS:

- **S-038-22** – pp. 18-21

NEW CASES:

- **SUP-029-23** – pp. 21-26
- **PZ-044-22 & PZ-PD-044-22** – pp. 26-127

WORK SESSION/FOUR DISCUSSION ONLY:

- **Subdivision Design Infrastructure Manual & Amendment to Title 3 Subdivisions of the PCDSC** (Continued to January 24, 2024) pp. 127-129

INFORMATIONAL ITEM:

- **Presentation on Solar Utility Grade Energy Production in Pinal County** (Continued to February 15, 2024) – pp. 129

ADJOURNMENT: p. 145

TRANSCRIPTION PROVIDED BY

Julie A. Fish
Quick Response Transcription Services
829 East Windsor Avenue
Phoenix, Arizona 85006
602-561-2283

ORIGINAL PREPARED FOR:
PINAL COUNTY, ARIZONA

MENNENGA: Okay, I need to call to order the Pinal County Planning and Zoning meeting for January 18, 2024. So, starting on the agenda, Planning Manager Report.

WILLIAMS: Mr. Vice Chair, if we could do the roll call first, please.

MENNENGA: I'm sorry, roll call. Please proceed.

WILLIAMS: All right. Commissioner Mooney.

MOONEY: Here.

WILLIAMS: Commissioner Davila. Commissioner Schnepf.

SCHNEPF: Here.

WILLIAMS: Commissioner Lizarraga.

LIZARRAGA: Here.

WILLIAMS: Commissioner Klob.

KLOB: Here.

WILLIAMS: Commissioner Keller.

KELLER: Here.

WILLIAMS: Commissioner Hartman.

HARTMAN: Here.

WILLIAMS: Commissioner Del Cotto.

DEL COTTO: Here.

WILLIAMS: Vice Chair Mennenga.

MENNENGA: Here.

WILLIAMS: Chairman Riggins. Mr. Vice Chair, we have eight members present, so we do have a quorum.

it's an incredible setting where that sits, but we're pretty fortunate here in Pinal County. That's just world class development down there what they've done. That's just, it's just pretty incredible, actually, what they kind of stuck in there. So anyway, there you go.

MASON: Thank you.

MENNENGA: All right.

??: Thank you Vice Chair.

MENNENGA: Yes sir. Okay, moving forward, SUP-029-23. Staff.

ROBERTS: Good morning Vice Chair, Members of the Commission, my name's Patrick Roberts, senior planner. I'm going to be presenting this case on behalf of Glenn Bak, who's unfortunately unwell today. This is for SUP-029-23 for a new cellular wire – excuse me, a collocate on a cellular wireless tower, revisions. This is a proposal proposing a special use permit to request a contin – to continue to maintain a wireless communication facility with new design standards. The location is northwest of East Apache Trail and Mammoth Mountain Road at the old Goldfield Ghost Town Mine & Tours location. The owner is Goldfield Ghost Town & Mine Tours, Inc., owner and Scott Hopper is the applicant on behalf of T-Mobile. The location of the site is approximately five acres. This is a County map showing the approximate location of the facility. This is a zoning map showing the surrounding

zoning, surrounding the property. CB-2 in the center, surrounded by GR and Bureau of Land Management land. This is an aerial showing the site. And this is a site plan showing the approximate location of the tower proposed for changes. This is an elevation showing the design change they're proposing. The proposal is to alter this existing windmill design, reduce the total height and replace it with a faux water tower design similar to a separate water tower design currently on the site. This is a photo looking north at the property line. South. East towards the Superstitions. West onto the site. This is a photo from 2011 showing the location of the existing windmill as it stands today. You can see in the foreground there is a separate water tower feature that closely mimics the design of the proposed stealth designs that they're bringing forward today. So some ideas for Commission consideration. This tower is important for continued coverage in this rural area of the County. This wireless communication facility has existed since at least 2011, and other locate - located here have served it in tandem. Traffic impacts for a wireless communication facility are minimal, as only occasional maintenance is required. And to date we have received no letters of opposition. Staff recommends approval of this SUP with 15 stipulations. And does the Commission have any questions of staff?

MENNENGA: Questions?

SCHNEPF: Vice Chair Mennenga. What was the – what's the main purpose for changing the style?

ROBERTS: Ultimately, it's a height reduction. I believe they were also looking at better concealment for the radio tower. If we go back to the elevation design, you can see that in the initial proposal, the design shows all of their antenna equipment is fully apparent. Today, with our application of the SUP code for wireless towers, we wouldn't approve additional collocations on this existing structure without better concealment. That's –

SCHNEPF: Okay. So they're wanting to put additional units on there.

ROBERTS: Yes, they're adding additional units within the –

SCHNEPF: And it doesn't fall under the current code, that's why they need to do a design change.

ROBERTS: Exactly.

SCHNEPF: Okay. Thank you.

MENNENGA: Thanks. Anyone – oh, I'm sorry, go ahead Commissioner Klob.

KLOB: Through the Vice Chair. Thank you. In regards to the detailing of this, I have two challenges besides, you know, kind of questions. One is the proportions as a water tower, the proportions seem a little off. You know, but then the other question I have is what – I don't, I

don't see any detailing on the detail itself allocating for, you know, mimicking you know, colors of like the other - or materials of the picture of the water tower that you showed a moment ago. What control does the County have over the design consideration of that?

ROBERTS: It has some. This, of course, will go forward for site plan review for construction safety. As part of that - and I believe they do have a detail in here detailing color and style of the wood appearance in these footnotes here on the side. But with that said, it would come down to we would have to apply that at the site plan review level to ensure that that was adhered to.

KLOB: I mean I like the concealment or kind of what they're trying to do. Like I said, I think the proportions are off if this were a true water tower, if that's what they're trying to mimic. And I would just - because it's such, you know, Goldfield is such a rustic, you know, you know, old west town and it is a strong driving, you know, area of economics for that area, that I just want to make sure that it fits appropriately and doesn't stick out like a sore thumb and there's nothing to hold the cell tower company, you know, hold their feet to the fire if the developer or the Goldfield actually, you know.

ROBERTS: And that's valid. And to speak to the design proportions, we would be requiring they adhere to

what's presented here in this elevation, this phase, unless we were to propose some changes, we wouldn't be requiring them to change the proportions of their tower going forward. They would be held to what's approved by the SUP.

SCHNEPF: I think stipulation 10 might address the design when it goes into that phase from what I read.

ROBERTS: Yes.

KLOB: Okay. Thank you.

MENNENGA: Anyone else? Thanks. Is the applicant here?

??: Unless you have questions (inaudible).

MENNENGA: Any questions for the applicant, anyone? Okay, all right. Thanks. You bet. Any further discussion from the Commission? Is there a motion?

ROBERTS: Sir, also just as a point – a note, I believe this does have a public hearing requirement.

MENNENGA: Oh, you're right, I am so sorry. You're right, so sorry about that. All right, at this time we'll open up the public hearing for SUP case 029-23, anyone wishing to speak in favor or opposed to this item? Okay, and if that's the case, we will close the public hearing portion of that and come back to the Commission. Anyone? Rand, make a motion.

DEL COTTO: I'm having a hard time.

MENNENGA: Oh okay.

SCHNEPF: Vice Chair Mennenga.

MENNENGA: Yes sir.

SCHNEPF: Vice Chair Mennenga, I'd like to make a motion. I'd like to recommend the Planning and Zoning Commission forward SUP-029-23 to the Board of Supervisors with a favorable recommendation with the attached stipulation, which are 15 stipulations.

MENNENGA: Thank you. Second?

KLOB: (Inaudible).

MENNENGA: All in favor?

COLLECTIVE: Aye.

MENNENGA: Any opposed? Okay, thank you. Next case. PZ-044-22.

DEOKAR: Good morning Vice Chair, Commission Members, Sangeeta Deokar, senior planner with planning division presenting the case, SunDog Energy Center. The case number is PZ-044-22 and PZ-PD-044-22. This proposal entails two cases. Again, a rezone request for 1,649 acres from GR, which is General Rural zone, to I-3/PAD Industrial zoning, and a PAD overlay for the same area for 1,649 acres. Once again, the size is 1,649 acres. Location is along Highway 287 in Coolidge/Eloy area, in unincorporated Pinal County. Owner is The Alice Group, Inc., Alice Robertson. Laura Miner is the person who is representing them. Applicant/agent is Katie DeSpain from Invenergy. The County map shows the location for

I, Julie A. Fish, Transcriptionist, do hereby certify that the foregoing pages constitute a full, true, and accurate transcript in the foregoing matter, and that said transcription was done to the best of my skill and ability.

I FURTHER CERTIFY that I am not related to nor employed by any of the parties hereto, and have no interest in the outcome hereof.

Julie A. Fish

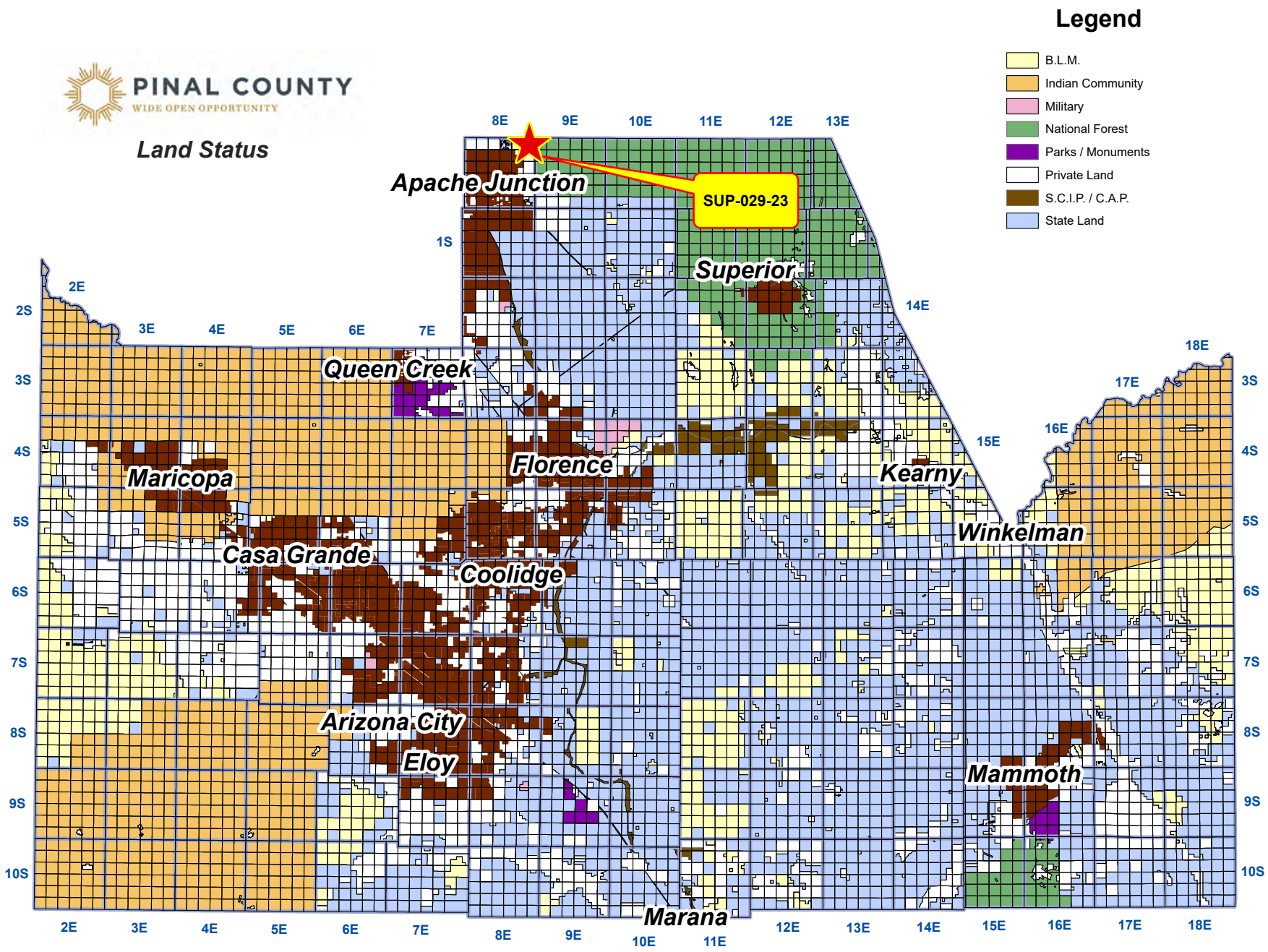
PINAL COUNTY
WIDE OPEN OPPORTUNITY
Land Status
Legend
B.L.M.
Indian Community
Military
National Forest
Parks / Monuments
Private Land
S.C.I.P. / C.A.P.
State Land
SUP-029-23
Apache Junction
Superior
Queen Creek
Florence
Maricopa
Kearny
Winkelman
Casa Grande
Coolidge
Arizona City
Eloy
Mammoth
Marana
8E
9E
10E
11E
12E
13E
14E
15E
16E
17E
18E
1S
2S
3S
4S
5S
6S
7S
8S
9S
10S
2E
3E
4E
5E
6E
7E

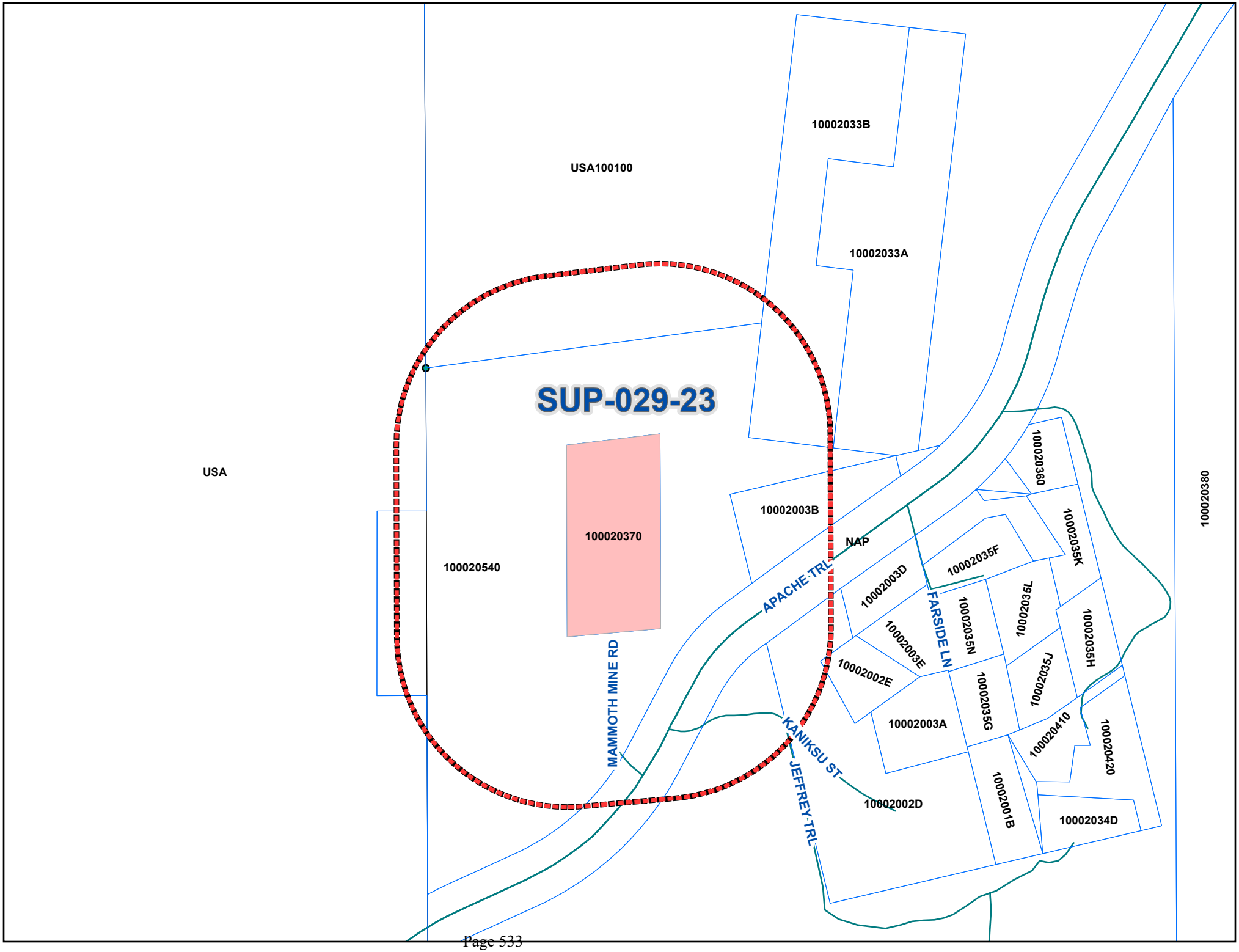
SUP-029-23
USA
USA100100
10002033B
10002033A
100020540
100020370
10002003B
NAP
APACHE TRL
MAMMOTH MINE RD
KANIKSU ST
JEFFREY TRL
FARSIDE LN
10002003D
10002003E
10002002E
10002003A
10002002D
10002035F
10002035N
10002035G
10002035L
10002035J
10002035K
10002035H
10002001B
100020360
100020410
100020420
10002034D
100020380

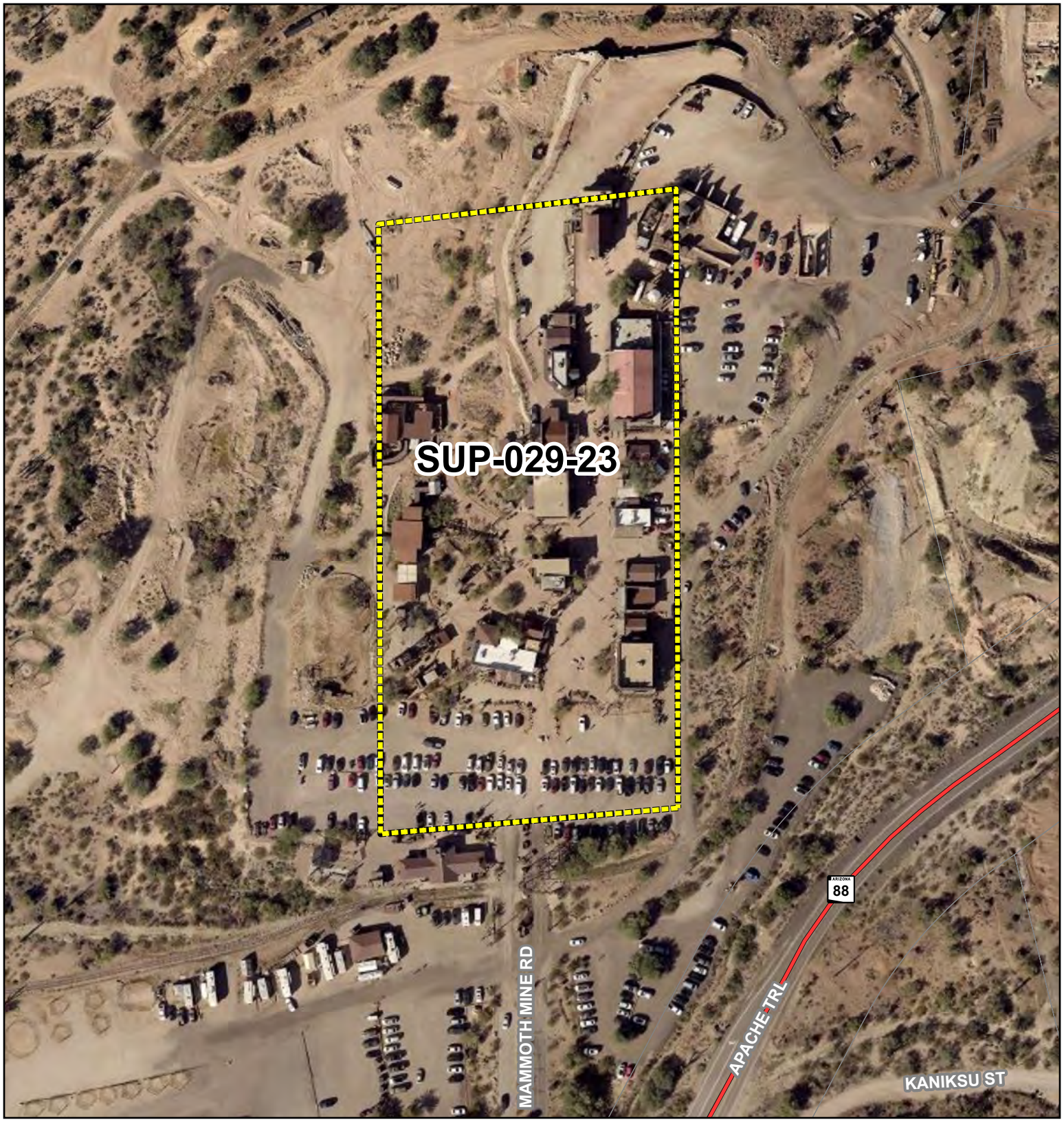

Community Development

PINAL COUNTY
WIDE OPEN OPPORTUNITY

SUP-029-23

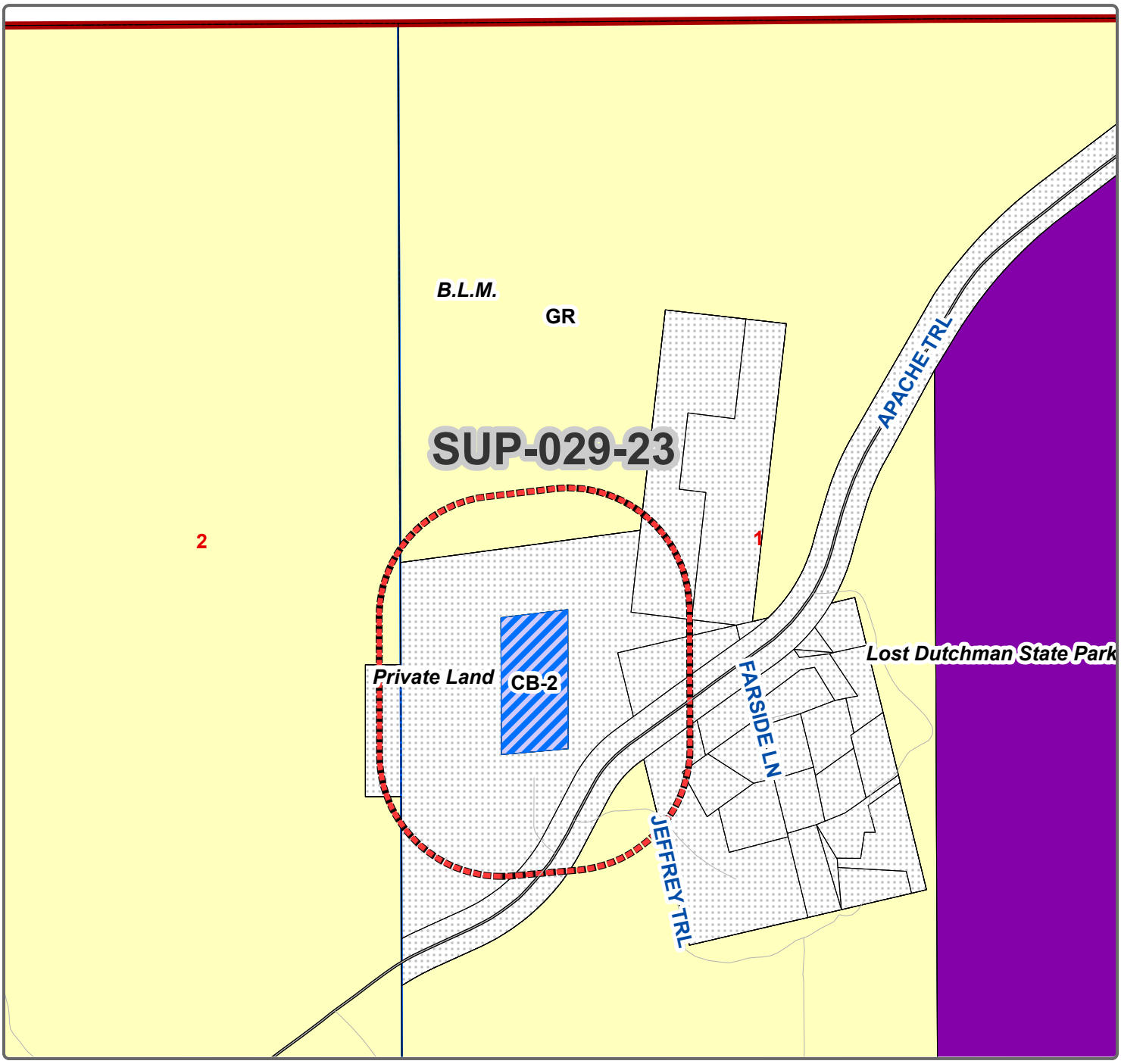

Community Development

SUP-029-23 – PUBLIC HEARING/ACTION: Goldfield Ghost Town & Mine Tours INC, property owner, Scott Hopper, applicant/ agent, requesting approval of a Special Use Permit to continue to operate a wireless communication facility, on a 5.00± acre parcel in the CB-2 General Business Zone; tax parcel 100-02-0370 (legal on file); situated in a portion of Section 1, Township 1 North, Range 8 East, Pinal County, Arizona, located northwest of E Apache Trail and E Mammoth Mine Rd. in an unincorporated area of Pinal County.

Current Zoning: CB-2	Requested Zoning: Rezone	Current Land Use: Recreation/Conservation

PINAL COUNTY
WIDE OPEN OPPORTUNITY

Legal Description: Situated in a portion of Section 1, Township 1 North, Range 8 East, Pinal County, Arizona, located northwest of E Apache Trail and E Mammoth Mine Rd. in an unincorporated area of Pinal County. SEC 01, TWN 01N, RNG 08E	N	**Owner/Applicant:** GOLDFIELD GHOST TOWN & MINE TOURS INC, PROPERTY OWNER, SCOTT HOPPER, APPLICANT/AGENT	
		Drawn By: GIS / IT /SAH	**Date:** 12/11/2023
	Sheet No. 1 of 1	**Section** 01 / **Township** 01N	**Range** 08E
		Case Number: SUP-029-23	

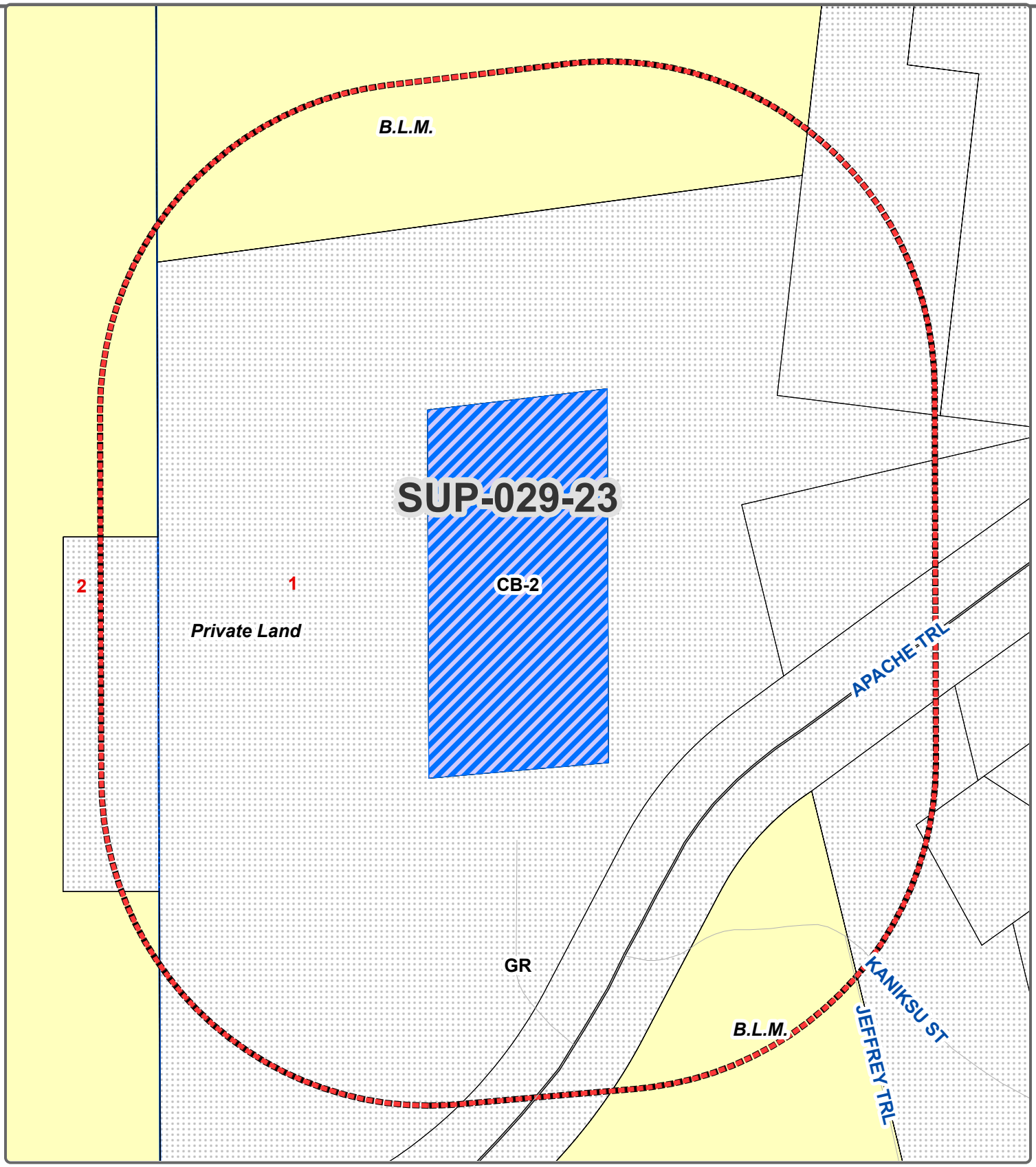

Community Development

Goldfield Ghost Town & Mine Tours INC, property owner, Scott Hopper, applicant/agent			
GIS/IT - SAH	12/11/2023		
Section 01	Township 01N	Range 08E	
SUP-029-23			

Legal Description:

Situated in a portion of Section 1, Township 1 North, Range 8 East, Pinal County, Arizona, located northwest of E Apache Trail and E Mammoth Mine Rd. in an unincorporated area of Pinal County.

SEC 01, TWN 01N, RNG 08E

Sheet No. 1 of 1

PINAL COUNTY
WIDE OPEN OPPORTUNITY

Current Zoning: CB-2
Request Zoning: Rezone
Current Land Use: Recreation/ Conservation

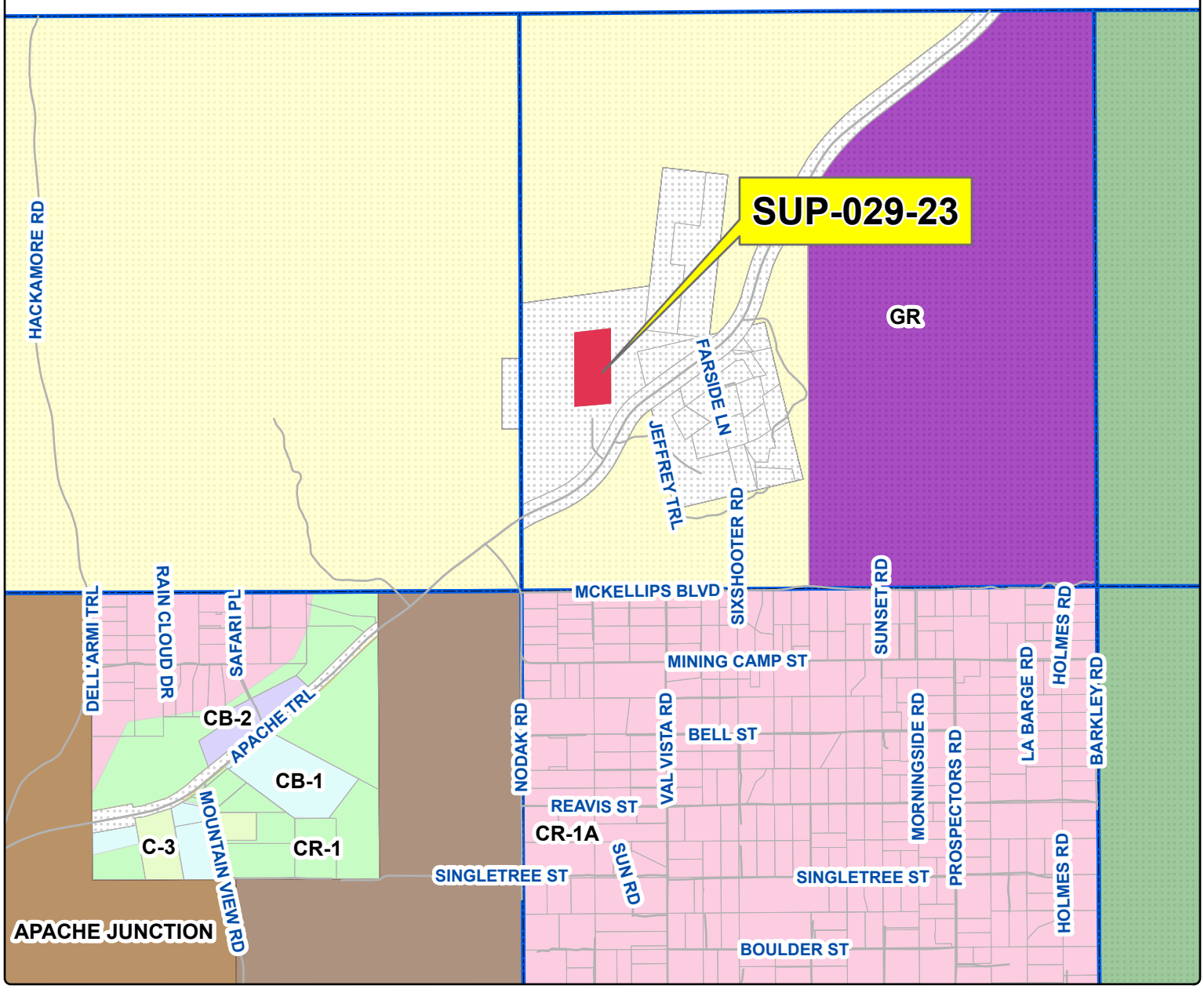

Community Development

PINAL COUNTY
WIDE OPEN OPPORTUNITY

Legal Description:

Situated in a portion of Section 1, Township 1 North, Range 8 East, Pinal County, Arizona, located northwest of E Apache Trail and E Mammoth Mine Rd. in an unincorporated area of Pinal County.

SEC 01, TWN 01N, RNG 08E

Owner/Applicant: GOLDFIELD GHOST TOWN & MINE TOURS INC. PROPERTY OWNER SCOTT HOPPER, APPLICANT/AGENT			
Drawn By: GIS / IT / SAH		Date: 12/11/2023	
Sheet No. 1 of 1	Section 01	Township 01N	Range 08E
Case Number: SUP-029-23			

Leo Lew
County Manager

PINAL COUNTY
WIDE OPEN OPPORTUNITY

APPLICATION FOR A SPECIAL USE PERMIT IN AN UNINCORPORATED AREA OF PINAL COUNTY, ARIZONA
(All applications must be typed or written in ink)

Special Use Permit & Property Information:
(Feel free to include answers and "Supporting Information" to these questions in a Supplementary Narrative, when doing so write see narrative on the space provided)

1. Date of Pre-application Meeting:_____ **2.** Pre-application Number: Z-PA-_____

3. The legal description of the property: _____
_____

4. Tax Assessor Parcel Number(s):_____**5.** Current Zoning:_____

6. Parcel size: _____

7. The existing use of the property is as follows:_____
_____

8. The exact use proposed under this request:_____
_____

9. Is the property located within three (3) miles of an incorporated community?_____If yes, which ones?
_____

10. Is an annexation into a municipality currently in progress?_____
If yes which one?:_____

11. Is there a zoning or building violation on the property for which the owner has been cited?_____
If yes, Zoning/Building Violation Number:_____

12. Discuss any recent changes in the area that would support your application i.e.: zone change(s), subdivision approval, Planned Area Development (PAD), utility or street improvements, adopted Comprehensive/Area Plan(s) or similar changes and why this proposed use is needed and necessary at this time: _____
_____

INV#:_____AMT:_____DATE:_____CASE:_____Xref:_____

COMMUNITY DEVELOPMENT
Planning Division

85 N. Florence St., PO Box 2973, Florence, AZ 85132 T 520-866-6442 FREE 888-431-1311 F 520-866-6530
www.pinalcountyaz.gov

Supporting Information for a Special Use Permit:

1. Provide information as to the use and evidence that it is in accordance with the intent of Section 2.151.010: _____

2. Note any services that are not available to the site. Discuss and improvements of services that would be provided to support the use: _____

3. Have you discussed possible conditions that may be placed on the permit with the Planning Department? ❑ YES ❑ NO

4. Do you understand that the Pinal County Board of Supervisors may include any conditions it finds necessary to conserve and promote public health safety, convenience and general welfare?
❑ YES ❑ NO

5. Do you understand that if a condition is violated, that there is a public process by which your permit may be revoked and declared null and void? ❑ YES ❑ NO

6. What is the amount of traffic to be generated? (# of trips/day, deliveries/week). _____ _____, Show ingress/egress on the site plan.

7. How many parking spaces are to be provided (employees and customers)? _____ Indicate these parking spaces on the site plan.

8. Is there a potential for excessive noise (I.E.; children, machinery) or the production of smoke, fumes, dust or glare with this proposed land use? If yes, how will you alleviate these problems for your neighbors?_____
_____

9. What type of landscaping are you proposing to screen this use from your neighbors?_____ _____. Indicate the landscaping on your site plan.

10. What type of signage are you proposing for the activity? Where will the signs be located, show the locations of signs on your site plan.

11. If the proposed land use involves any type of manufacturing or production process, provide a short synopsis of the processes utilizing diagrams, flowcharts and/or a short narrative.

12. Explain how the appearance and operation of the proposed land use will maintain the integrity and character of the zone in which the Special Use Permit is requested._____
_____

I certify the information included in this application is accurate, to the best of my knowledge. I have read the application and I have included the information, as requested. I understand if the information submitted is incomplete, this application cannot be processed.

Name of Applicant | Address

Scott Hopper

Signature of Applicant | E-Mail Address | Phone Number

Name of Agent/Representative | Address

Scott Hopper

Signature of Agent/Representative | E-Mail Address | Phone Number

The Agent/Representative has the authority to act on behalf of the landowner/applicant, which includes agreeing to stipulations. The agent will be the contact person for Planning staff and must be present at all hearings. Please use attached Agency Authorization form, if applicable.

Name of Landowner | Address

See attached

Signature of Landowner | E-Mail Address | Phone Number

If landowner is not the applicant, then applicant must submit a signed notarized consent form from the landowner with this application. Please use attached Consent to Permit form, if applicable.

CORPORATE PROPERTY OWNER SIGNATURE BLOCK AND ACKNOWLEDGMENT

GOLDFIELD GHOST TOWN & MINE TOURS INC
[Insert Company's or Trust's Name]

By: _____ PRES.
[Signature of Authorized Officer, or Trustee]

Its: Director
[Insert Title]

Dated: 8/14/2023

STATE OF ARIZONA)
) ss.
COUNTY OF MARICOPA)

The foregoing instrument was acknowledged before me, this August 14th day of AUGUST, 2023 by

Robert Schoose, Director
[Insert Signor's Name] *[Insert Title]*

GOLDFIELD GHOST TOWN & MINE TOURS INC, Arizona an,
[Name of Company or Trust] *[Insert State of Incorporation, if applicable]*

And who being authorized to do so, executed the foregoing instrument on behalf of said entity for the purposes stated therein.

Notary Public State of Arizona
Maricopa County
Nancy L Fulks
My Commission Expires 7/5/2027
Commission Number 650816

My Commission Expires: 7/5/2027

NANCY L. FULKS
Printed Name of Notary

Nancy L. Fulks
Signature of Notary

ALTERNATE: Use the following acknowledgment only when a second company is signing

On behalf of the owner:

STATE OF_____)
) ss. (Seal)
COUNTY OF_____)

The foregoing instrument was acknowledged before me, this_____ day of _____, 20____ by
_____, who acknowledges himself/herself to be
[Insert Signor's Name]
_____, of _____
[Title of Office Held] *[Second Company]*
As _____ for _____, and who being
[i.e. member, manager, etc.] *[Owner's Name]*

Authorized to do so, executed the foregoing instrument on behalf of said entities for the purposes stated therein.

My Commission Expires_____

_____
Printed Name of Notary

_____
Signature of Notary

Narrative / Cover Letter

Project Name: TMO PH50434A Goldfield
Site Location: 4650 North Mammoth Mine Road, Apache Junction, AZ 85119
APN# 100-02-0370
Zoning: CB-2

PURPOSE OF REQUEST

On behalf of T-Mobile, Pinnacle Consulting is requesting Pinal County's SUP approval for an antenna modification to an existing communication Facility. This SUP is being requested by Pinal County, although this existing WCF that has been in service since 2014, Pinal County has issued several different building permits and administrative zoning approvals from 2014 to present for this existing WCF.

DESCRIPTION OF PROPOSAL

This modification will enhance the appearance of the existing cell site by concealing the antennas within a fuax water tank, and will blend in with the existing architectural theme of the property. The overall height of the tower will be reduced from 56' to 49', lease area will not change. This is an unmanned facility that does not require water, gas or septic services. The site will be visited by a Verizon service tech approximately once a month.

Closing

Citizens will not be unduly affected by this modification, and will benefit by the continued dependability, coverage and high-quality wireless communications for personal, business and emergency uses. T-Mobile is committed to developing the best wireless system for this area while working cooperatively with Pinal County.

Thank you in advance for your consideration.

Scott Hopper
Site Acquisition
PINNACLE CONSULTING, INC
1426 N Marvin St, Suite 101
Gilbert, AZ 85233
E: Scott.Hopper@pinnacleco.net
O: 480-664-9588 Ext: 227
M: 602-743-9439
F: 480-664-9850

SITE NUMBER: PH50434A
SITE NAME: SPRINT PH54XC026 MARACA

SPRINT RETAIN

4650 N MAMMOTH MINE RD
APACHE JUNCTION, AZ 85119
PINAL COUNTY

PROJECT DESCRIPTION

SCOPE OF WORK

- REMOVE (3) EXISTING ANTENNAS
- REMOVE EXISTING ANTENNA MOUNT
- REMOVE EXISTING GPS ANTENNA
- REMOVE EXISTING WINDMILL FAN
- REMOVE (9) EXISTING RADIOS AT EQUIPMENT LEVEL
- REMOVE (24) EXISTING COAX CABLES
- REMOVE (2) EXISTING EQUIPMENT CABINETS
- REMOVE EXISTING DISTRIBUTION BOX
- REMOVE EXISTING 200A PPC CABINET
- REMOVE (12) EXISTING HFC'S
- INSTALL (6) NEW ANTENNAS
- INSTALL (6) NEW RADIOS
- INSTALL NEW ANTENNA MOUNT
- INSTALL (2) NEW HCS 2.0 JUNCTION BOXES
- INSTALL (2) NEW HCS 2.0 HYBRID CABLE W/ BREAKOUT PENDANTS
- INSTALL NEW BATTERY CABINET
- INSTALL NEW SITE SUPPORT CABINET
- INSTALL NEW 225A PPC CABINET
- INSTALL NEW GPS ANTENNA
- INSTALL NEW EXCESS FIBER BOX
- INSTALL NEW FAUX WATER TANK. SEE ISE INCORPORATED CONSTRUCTION DRAWINGS, JOB #18375, DATED 04/10/23

VICINITY MAP

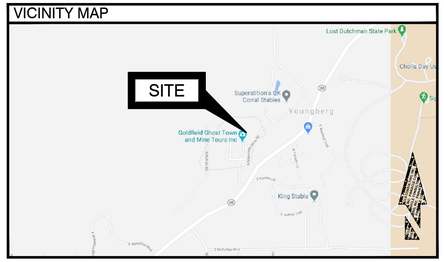

SITE DIRECTIONS

DEPART 2601 W. BROADWAY RD, TEMPE AZ 85282, TURN RIGHT ONTO W. BROADWAY RD. THEN TURN RIGHT ONTO I-10 E TOWARD TUCSON. CONTINUE FOR 0.7 MILES UNTIL YOU REACH US-60 E TOWARDS GLOBE. TAKE US-60 E. AND CONTINUE FOR 26.6 MILES UNTIL YOU REACH EXIT 198/ S. GOLDFIELD RD. TURN LEFT ONTO S. GOLDFIELD RD, THEN CONTINUE FOR 3.5 MILES UNTIL YOU REACH E. LOST DUTCHMAN BLVD. TURN LEFT ONTO E. LOST DUTCHMAN BLVD, THEN CONTINUE FOR 0.6 MILES UNTIL YOU REACH AZ-88 E./ N. APACHE TRAIL. TURN RIGHT ONTO AZ-88/ N. APACHE TRAIL, THEN CONTINUE FOR 2.1 MILES UNTIL YOU REACH N. MAMMOTH MINE RD. TURN LEFT ONTO N. MAMMOTH MINE RD, THEN CONTINUE STRAIGHT UNTIL YOU GET TO YOUR DESTINATION.

SHEET INDEX

T-1	PROJECT INFORMATION
A-1	EXISTING SITE PLAN
A-2	ENLARGED SITE PLAN
A-3	ELEVATIONS
A-4	ANTENNA PLANS
A-5	DETAILS
A-6	DETAILS
A-7	DETAILS
E-1	ELECTRICAL NOTES & ELECTRICAL PLAN
E-2	ONE-LINE DIAGRAM & PANEL SCHEDULE
G-1	GROUNDING PLAN & GROUNDING NOTES
GSN1.0	PROJECT INFORMATION (BY OTHERS)
GSN2.0	PROJECT NOTES (BY OTHERS)
S1.0	TOWER - SCREEN SECTIONS & ELEVATION (BY OTHERS)
S2.0	UPPER AND LOWER FRP MOUNTS (BY OTHERS)
S3.0	SITEPRO1 HARDWARE (BY OTHERS)
FRP1.0	FRP DETAILS (BY OTHERS)

CONTACT INFORMATION

CLIENT:
T-MOBILE
1330 W.SOUTHERN AVE.
SUITE A-102
TEMPE, AZ 85282
CONTACT: MICHAEL GOSS
PHONE: [630] 697-8293

CONSTRUCTION MANAGER
PINNACLE CONSULTING, INC.
1426 N. MARVIN STREET #101
GILBERT, AZ 85233
CONTACT: NICK WATERS
PHONE: [480] 229-6613

PROPERTY OWNER:
GOLDFIELD GHOST TOWN
& MINE TOURS, INC.
4650 N. MAMMOTH MINE RD.
APACHE JUNCTION, AZ 85119

SITE ACQUISITION:
PINNACLE CONSULTING, INC.
1426 N. MARVIN STREET #101
GILBERT, AZ 85233
CONTACT: SCOTT HOPPER
PHONE: [602] 743-9439

ENGINEERING FIRM:
PINNACLE CONSULTING, INC.
1426 N. MARVIN STREET #101
GILBERT, AZ 85233
ENGINEER: KYLE FORTIN, PE
PHONE: [623] 217-4235

PROJECT DATA

T-MOBILE ID:	**PH50434A**
SPRINT ID:	**PH54XC026 MARACA**
ZONING:	COMMERCIAL
PARCEL #:	100-02-037
USE:	UNMANNED COMMUNICATIONS
LEASE AREA:	636 SQ. FT
JURISDICTION:	PINAL COUNTY
GOVERNING CODES:	2018 IBC, 2018 IFC, 2018 IMC, 2017 NEC

ALL BUILDING CODES LISTED ABOVE SHALL INCLUDE AMENDMENTS BY THE GOVERNING JURISDICTION

APPROVALS

T-MOBILE [RF]: _____ DATE: _____

T-MOBILE [CONST.]: _____ DATE: _____

T-MOBILE [RE]: _____ DATE: _____

LANDLORD: _____ DATE: _____

GENERAL NOTES

1. THIS WIRELESS TELECOMMUNICATIONS FACILITY WILL MEET THE HEALTH AND SAFETY STANDARDS FOR ELECTROMAGNETIC FIELD EMISSIONS AS ESTABLISHED BY THE FEDERAL COMMUNICATIONS COMMISSION OR ANY SUCCESSOR THEREOF, AND ANY OTHER FEDERAL OR STATE AGENCY.
2. THIS WIRELESS TELECOMMUNICATIONS FACILITY WILL MEET THE REGULATIONS OF THE FEDERAL COMMUNICATIONS COMMISSION REGARDING PHYSICAL AND ELECTROMAGNETIC INTERFERENCE.
3. LIGHTING OR SIGNS WILL BE PROVIDED ONLY AS REQUIRED BY FEDERAL OR STATE AGENCIES.
4. DEVELOPMENT AND CONSTRUCTION OF THIS PROJECT WILL COMPLY WITH ALL APPLICABLE CODES AND ORDINANCES.
5. EXISTING PARKING IS NOT AFFECTED BY THIS PROJECT.
6. THIS PROJECT DOES NOT INCLUDE WATER OR SEWER.
7. CONTRACTOR TO REFER TO LATEST T-MOBILE RFDS FOR EQUIPMENT MANUFACTURER AND MODEL NUMBERS.
8. WHEN THE OPERATIONS OF THE WIRELESS COMMUNICATIONS FACILITY IS DISCONTINUED FOR A PERIOD OF SIX MONTHS OR A SPECIAL USE PERMIT EXPIRES, THE FACILITY SHALL BE REMOVED AND THE SITE SHALL BE RESTORED TO ITS NATURAL STATE AND TOPOGRAPHY AND VEGETATED CONSISTENT WITH THE NATURAL SURROUNDINGS AT THE EXPENSE OF THE OWNER OF THE FACILITY.
9. NO ADVERTISING IS PERMITTED ANYWHERE UPON OR ATTACHED TO THE FACILITY. SIGNAGE IS LIMITED TO SMALL NON-ILLUMINATED WARNING AND IDENTIFICATION SIGNS.
10. LONG TERM VEHICLE STORAGE AND OTHER OUTDOOR STORAGE IS PROHIBITED.

SITE LOCATION

LATITUDE	33.45790833° N [NAD83]
LONGITUDE	-111.49159720° W [NAD83]
GROUND ELEVATION	2048' [NAVD88]

PREPARED FOR:

T-Mobile

2601 W. BROADWAY RD
TEMPE, AZ 85282

CONSULTING FIRM

PINNACLE CONSULTING, INC.
Construction - Project Management - Site Development

1426 N. MARVIN STREET #101
GILBERT, AZ 85233

PROJECT NO:	PH50434A
DRAWN BY:	M.G.
CHECKED BY:	KF

REV	DATE	DESCRIPTION	BY
A	06/22/22	ISSUED FOR REVIEW	M.G.
0	09/29/22	ISSUED FOR PERMIT	CDA
1	12/01/22	ISSUED FOR PERMIT	JM
2	04/21/23	ISSUED FOR PERMIT	M.G.
3	06/05/23	ISSUE FOR PERMIT	M.G.
4	06/20/23	ISSUED FOR PERMIT	M.G.

RFDS REV DATE	REVISION:
01/17/23	1

Registered Professional Engineer (Civil)
CERTIFICATE NO. 68312
KYLE A. FORTIN
6/21/23
Date Signed
ARIZONA, U.S.A.

SPRINT PH54XC026
PH50434A
4650 N MAMMOTH MINE RD
APACHE JUNCTION, AZ 85119
PINAL COUNTY

SHEET TITLE
PROJECT INFORMATION

SHEET NUMBER
T-1

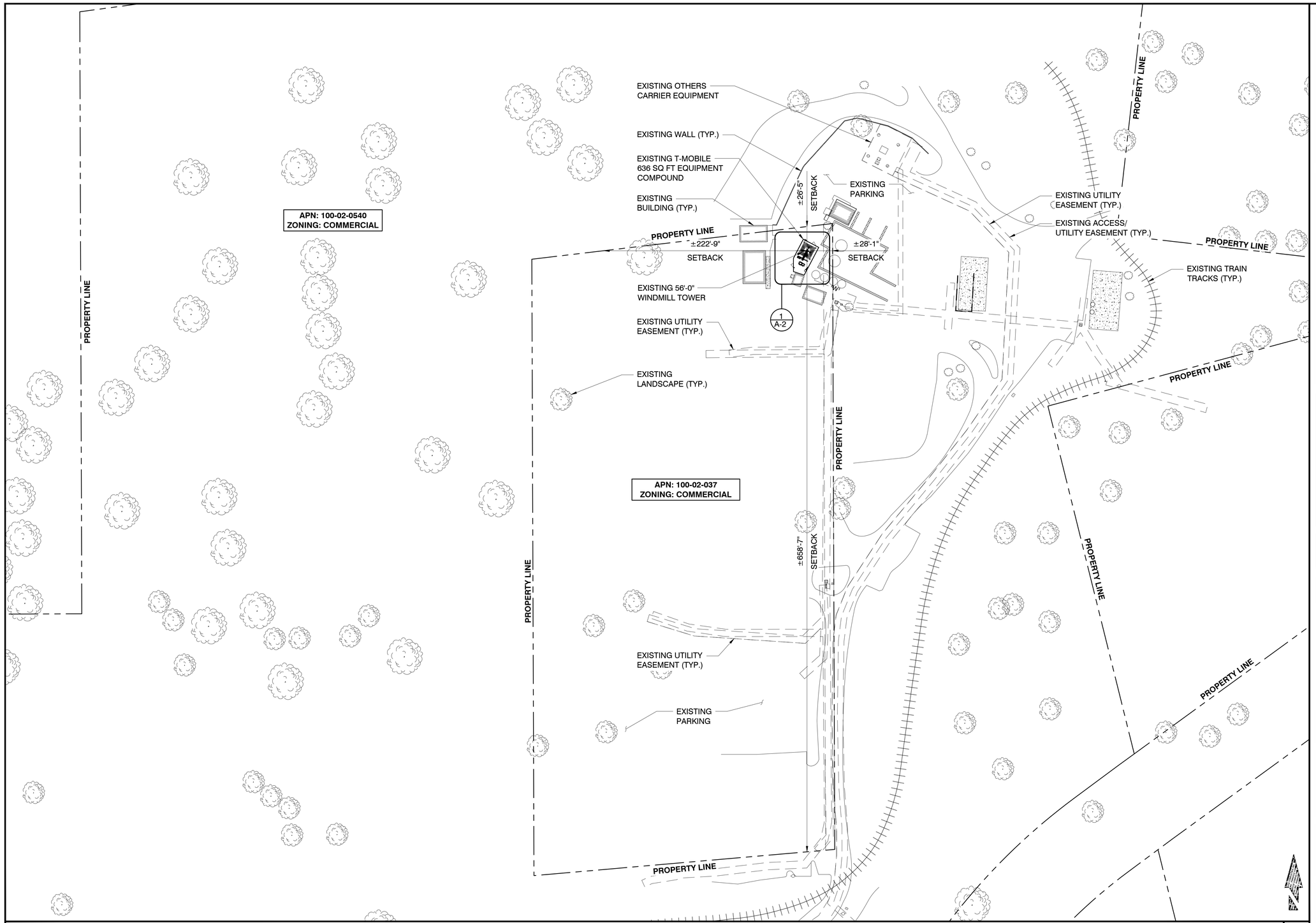

EXISTING SITE PLAN

24"x36" SCALE: 1" = 50'
11"x17" SCALE: 1" = 100'

50' 25' 0' 50'

1

PREPARED FOR:

T-Mobile

2601 W. BROADWAY RD
TEMPE, AZ 85282

CONSULTING FIRM

PINNACLE CONSULTING, INC.
Construction - Project Management - Site Development

1426 N. MARVIN STREET #101
GILBERT, AZ 85233

PROJECT NO:	PH50434A
DRAWN BY:	M.G.
CHECKED BY:	KF

REV	DATE	DESCRIPTION	BY
A	06/22/22	ISSUED FOR REVIEW	M.G.
0	09/29/22	ISSUED FOR PERMIT	CDA
1	12/01/22	ISSUED FOR PERMIT	JM
2	04/21/23	ISSUED FOR PERMIT	M.G.
3	06/05/23	ISSUE FOR PERMIT	M.G.
4	06/20/23	ISSUED FOR PERMIT	M.G.

RFDS REV DATE	REVISION:
01/17/23	1

Registered Professional Engineer (Civil)
CERTIFICATE NO.
68312
KYLE A. FORTIN
6/21/23
Date Signed
ARIZONA, U.S.A.

SPRINT PH54XC026

PH50434A
4650 N MAMMOTH MINE RD
APACHE JUNCTION, AZ 85119
PINAL COUNTY

SHEET TITLE

EXISTING SITE PLAN

SHEET NUMBER

A-1

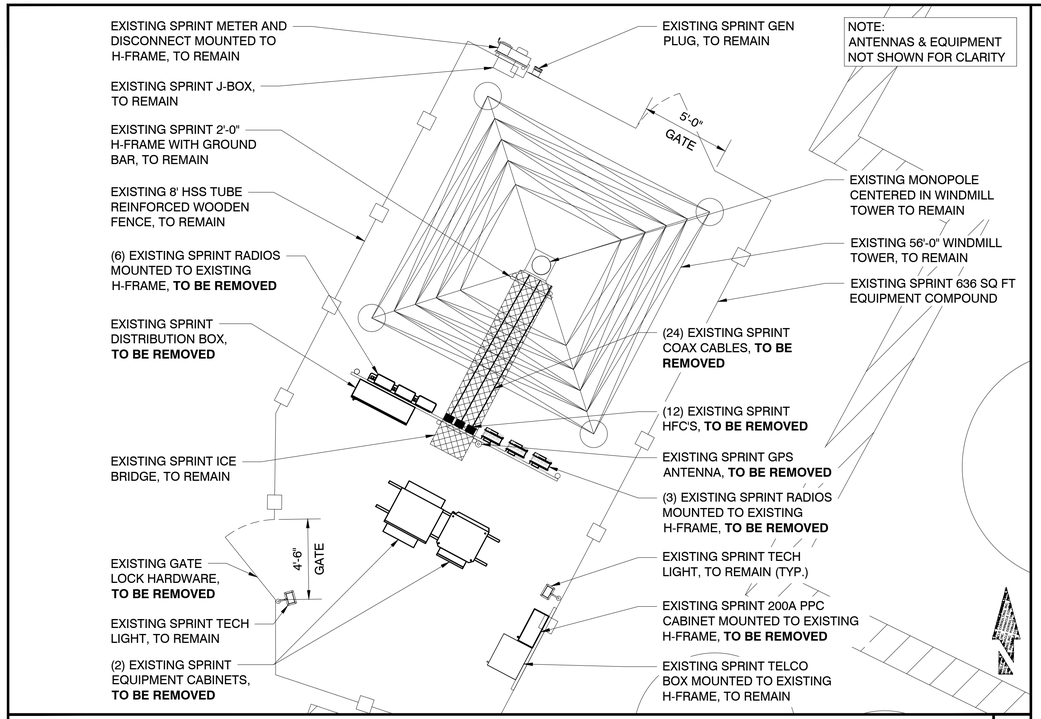

NOTE:
ANTENNAS & EQUIPMENT NOT SHOWN FOR CLARITY

EXISTING ENLARGED SITE PLAN

24"x36" SCALE: 1/4" = 1'-0"
11"x17" SCALE: 1/8" = 1'-0"

1

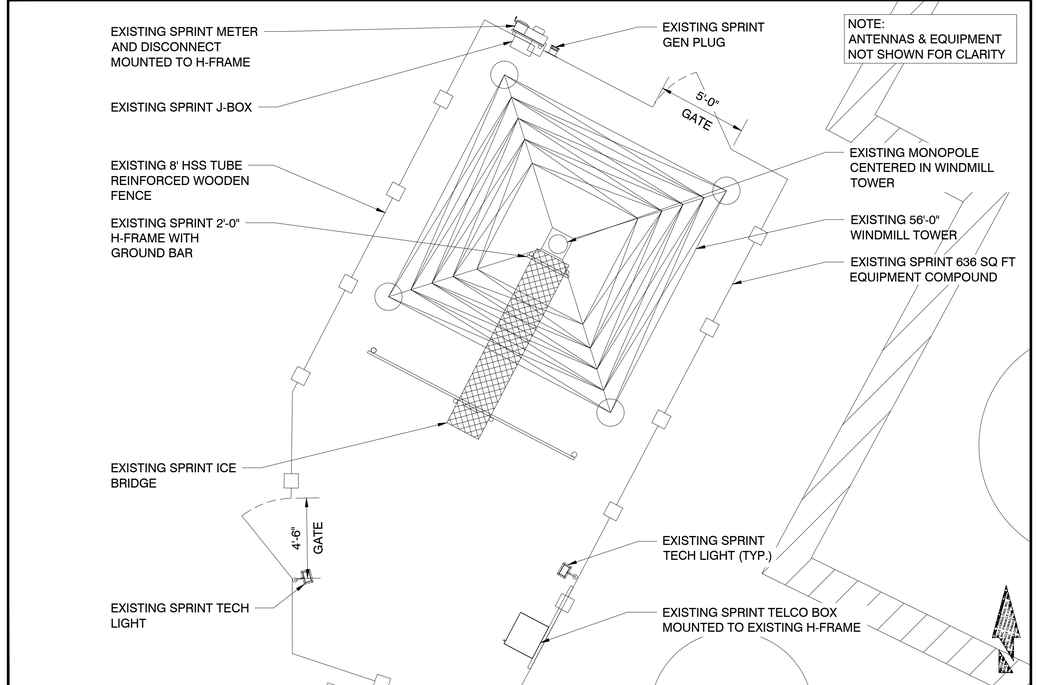

NOTE:
ANTENNAS & EQUIPMENT NOT SHOWN FOR CLARITY

INTERMEDIATE ENLARGED SITE PLAN

24"x36" SCALE: 1/4" = 1'-0"
11"x17" SCALE: 1/8" = 1'-0"

2

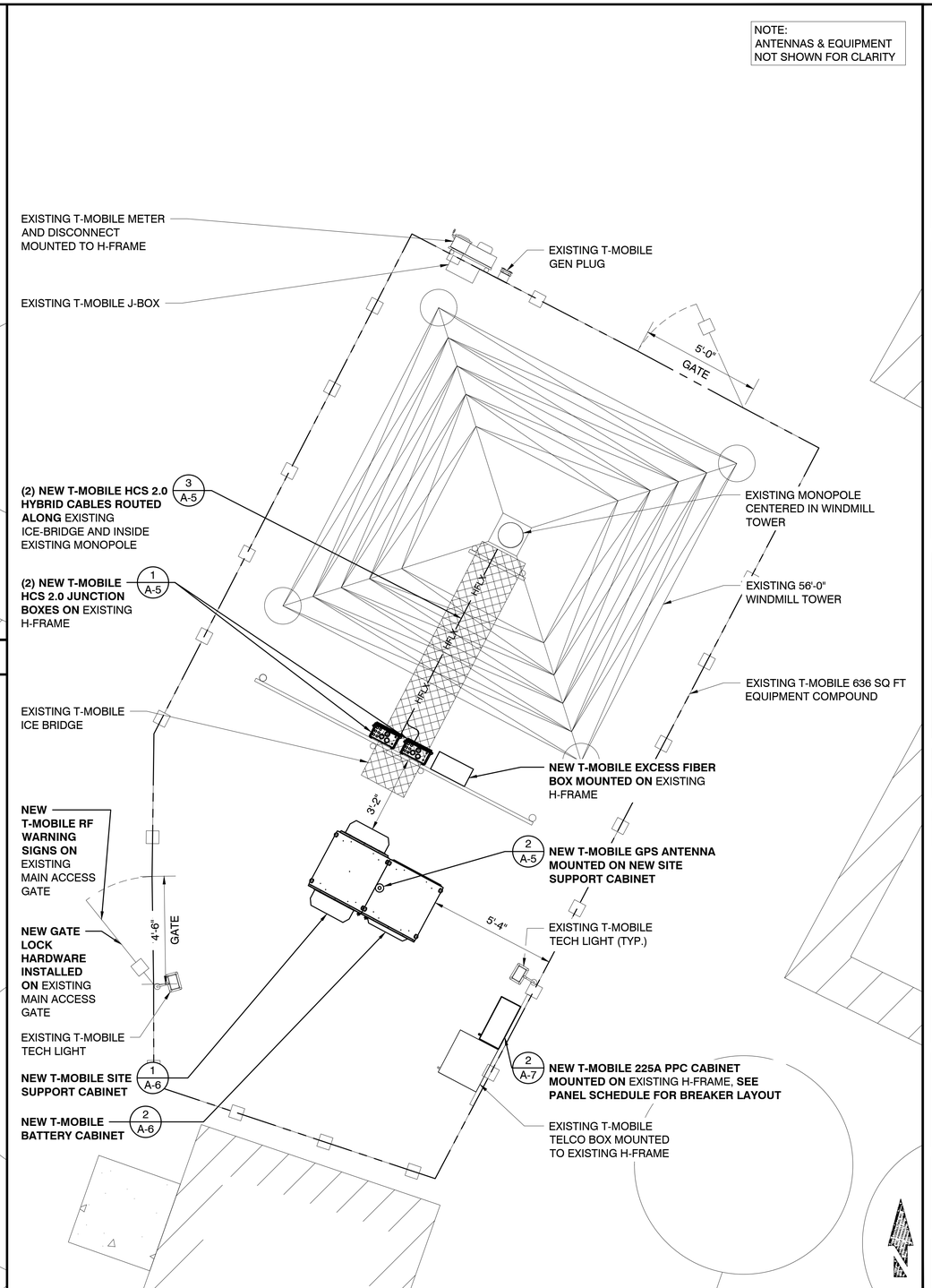

NOTE:
ANTENNAS & EQUIPMENT NOT SHOWN FOR CLARITY

NEW ENLARGED SITE PLAN

24"x36" SCALE: 3/8" = 1'-0"
11"x17" SCALE: 3/16" = 1'-0"

3

PREPARED FOR:

T-Mobile

2601 W. BROADWAY RD
TEMPE, AZ 85282

CONSULTING FIRM

PINNACLE CONSULTING, INC.
Construction - Project Management - Site Development

1426 N. MARVIN STREET #101
GILBERT, AZ 85233

PROJECT NO:	PH50434A
DRAWN BY:	M.G.
CHECKED BY:	KF

REV	DATE	DESCRIPTION	BY
A	06/22/22	ISSUED FOR REVIEW	M.G.
0	09/29/22	ISSUED FOR PERMIT	CDA
1	12/01/22	ISSUED FOR PERMIT	JM
2	04/21/23	ISSUED FOR PERMIT	M.G.
3	06/05/23	ISSUE FOR PERMIT	M.G.
4	06/20/23	ISSUED FOR PERMIT	M.G.

RFDS REV DATE	REVISION:
01/17/23	1

Professional Engineer (Civil) CERTIFICATE NO. 68312 KYLE A. FORTIN 6/21/23 Date Signed ARIZONA, U.S.A.

SPRINT PH54XC026

PH50434A
4650 N MAMMOTH MINE RD
APACHE JUNCTION, AZ 85119
PINAL COUNTY

SHEET TITLE

ENLARGED SITE PLAN

SHEET NUMBER

A-2

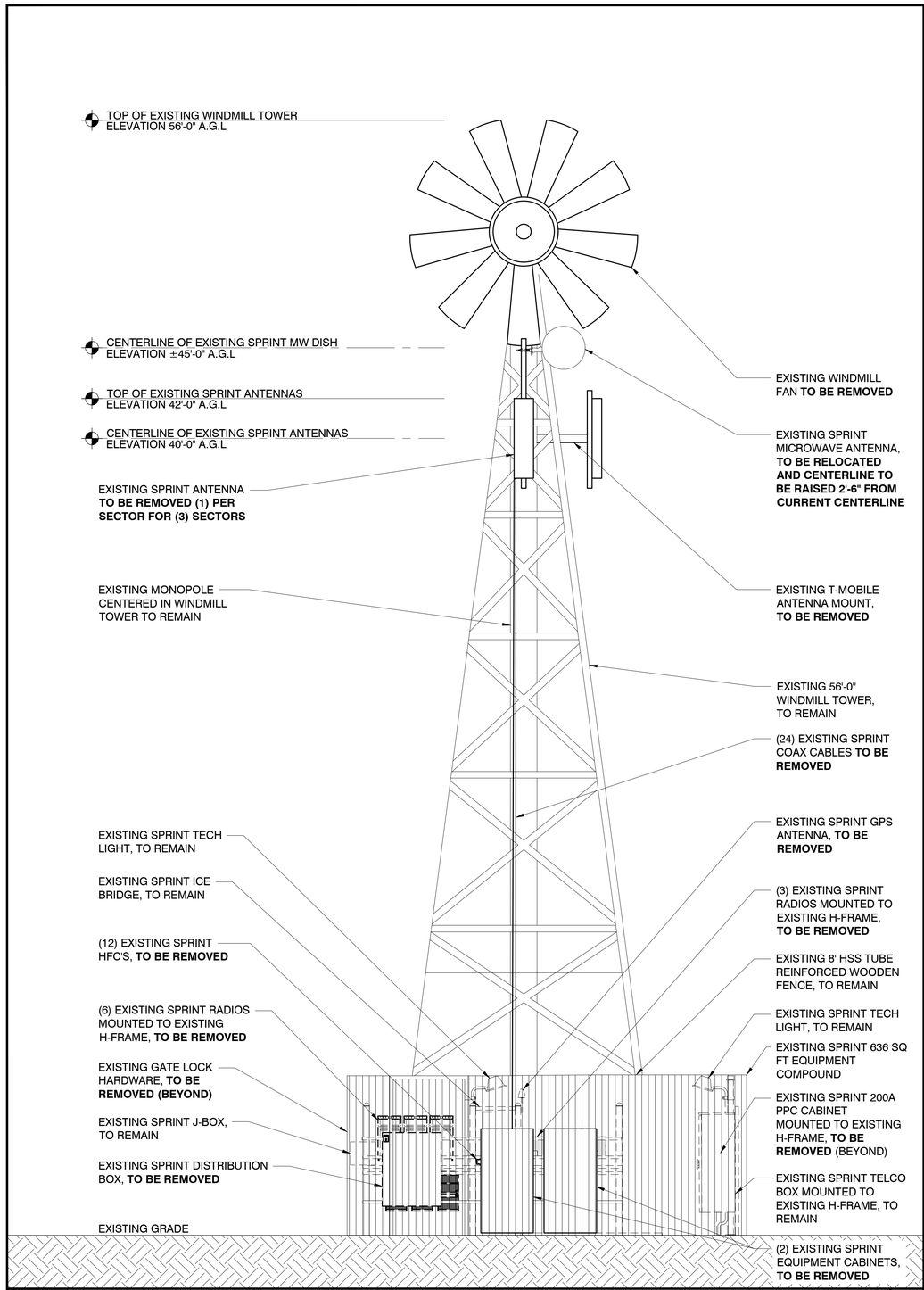

EXISTING SOUTHWEST ELEVATION

24"x36" SCALE: 5/16" = 1'-0"
11"x17" SCALE: 5/32" = 1'-0"

1

STRUCTURAL ANALYSIS IS BEING PERFORMED BY OTHERS. INSTALLATION SHALL NOT START UNTIL THE CONTRACTOR HAS ACQUIRED AND THOROUGHLY REVIEWED THE STRUCTURAL ANALYSIS AND/OR STRUCTURAL EVALUATION OR ASSESSMENTS PERTAINING TO ALL UPGRADES SHOWN IN THESE DRAWINGS AND SHALL FOLLOW ALL REPORT RECOMMENDATIONS.

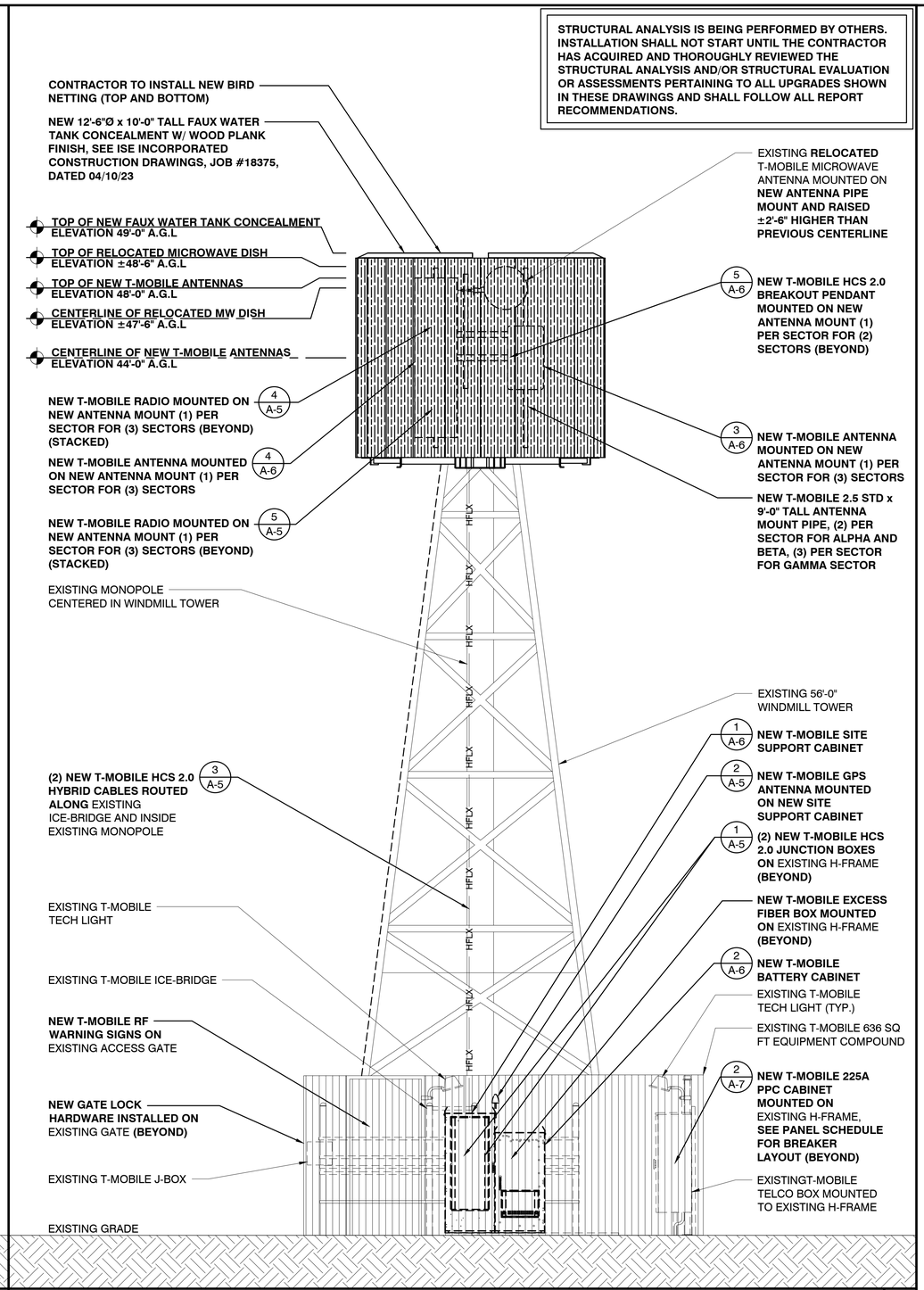

NEW SOUTHWEST ELEVATION

24"x36" SCALE: 5/16" = 1'-0"
11"x17" SCALE: 5/32" = 1'-0"

2

PREPARED FOR:

T-Mobile

2601 W. BROADWAY RD
TEMPE, AZ 85282

CONSULTING FIRM

PINNACLE CONSULTING, INC.
Construction - Project Management - Site Development

1426 N. MARVIN STREET #101
GILBERT, AZ 85233

PROJECT NO:	PH50434A
DRAWN BY:	M.G.
CHECKED BY:	KF

REV	DATE	DESCRIPTION	BY
A	06/22/22	ISSUED FOR REVIEW	M.G.
0	09/29/22	ISSUED FOR PERMIT	CDA
1	12/01/22	ISSUED FOR PERMIT	JM
2	04/21/23	ISSUED FOR PERMIT	M.G.
3	06/05/23	ISSUE FOR PERMIT	M.G.
4	06/20/23	ISSUED FOR PERMIT	M.G.

RFDS REV DATE	REVISION:
01/17/23	1

Registered Professional Engineer (Civil)
CERTIFICATE NO.
68312
KYLE A. FORTIN
6/21/23
Registered
ARIZONA, U.S.A.

SPRINT PH54XC026

PH50434A
4650 N MAMMOTH MINE RD
APACHE JUNCTION, AZ 85119
PINAL COUNTY

SHEET TITLE

ELEVATIONS

SHEET NUMBER

A-3

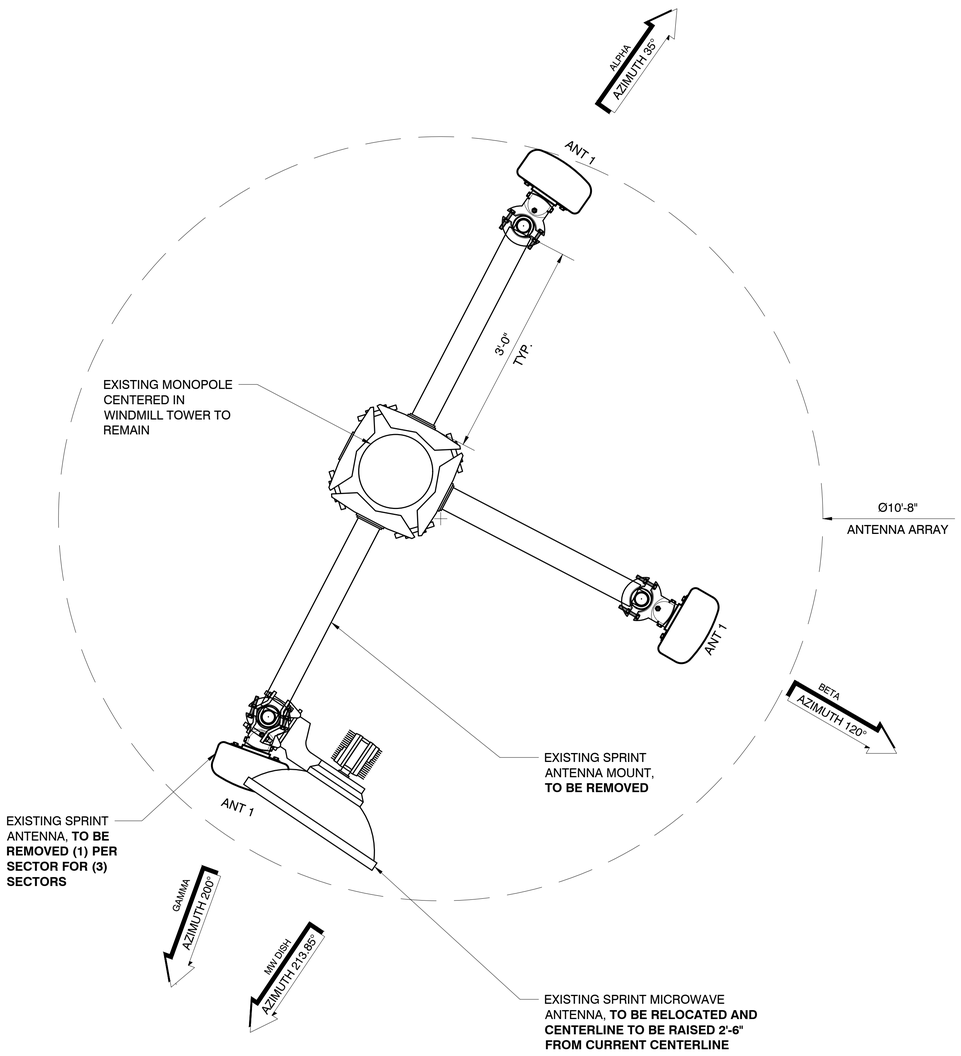

EXISTING ANTENNA & EQUIPMENT PLAN

24"x36" SCALE: 1" = 1'-0"
11"x17" SCALE: 1/2" = 1'-0"

1

STRUCTURAL ANALYSIS IS BEING PERFORMED BY OTHERS. INSTALLATION SHALL NOT START UNTIL THE CONTRACTOR HAS ACQUIRED AND THOROUGHLY REVIEWED THE STRUCTURAL ANALYSIS AND/OR STRUCTURAL EVALUATION OR ASSESSMENTS PERTAINING TO ALL UPGRADES SHOWN IN THESE DRAWINGS AND SHALL FOLLOW ALL REPORT RECOMMENDATIONS.

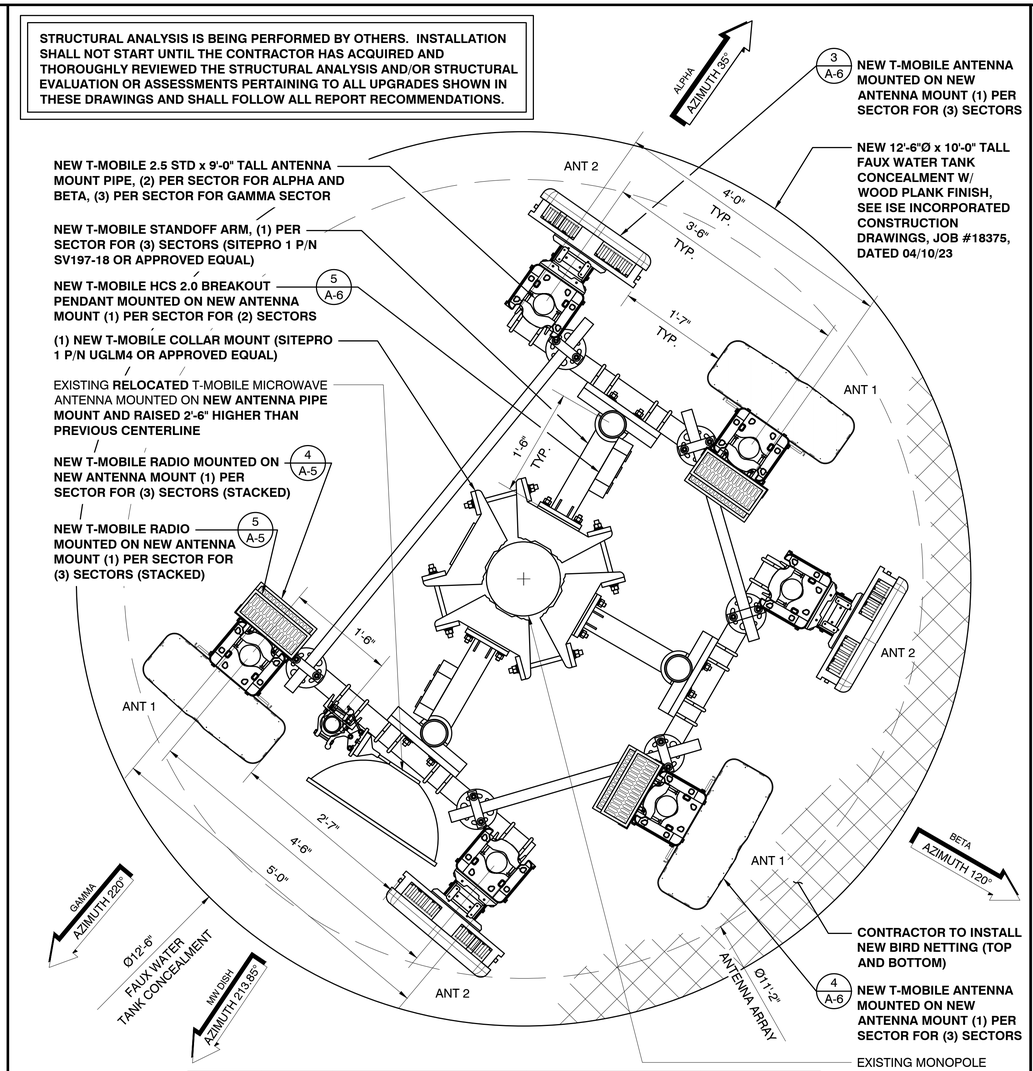

ANTENNA SECTOR	ANTENNA POSITION	AZIMUTH	NEW ANTENNA CENTERLINE	CABLE QTY. & SIZE	COAX LENGTH	FIBER QTY.	FIBER LENGTH
SECTOR 1	1	35°	44'-0" A.G.L.	-	-	*1	±100'
SECTOR 1	2	35°	44'-0" A.G.L.	-	-	-	-
SECTOR 2	1	120°	44'-0" A.G.L.	-	-	-	-
SECTOR 2	2	120°	44'-0" A.G.L.	-	-	-	-
SECTOR 3	1	220°	44'-0" A.G.L.	-	-	*1	±100'
SECTOR 3	2	220°	44'-0" A.G.L.	-	-	-	-
MW DISH	1	213.8515°	±47'-6" A.G.L.	-	-	-	-
* DENOTES NEW HCS 2.0 HYBRID CABLES							

NEW ANTENNA & EQUIPMENT PLAN

24"x36" SCALE: 1" = 1'-0"
11"x17" SCALE: 1/2" = 1'-0"

2

PREPARED FOR:

T-Mobile

2601 W. BROADWAY RD
TEMPE, AZ 85282

CONSULTING FIRM

PINNACLE CONSULTING, INC.
Construction - Project Management - Site Development

1426 N. MARVIN STREET #101
GILBERT, AZ 85233

PROJECT NO:	PH50434A
DRAWN BY:	M.G.
CHECKED BY:	KF

REV	DATE	DESCRIPTION	BY
A	06/22/22	ISSUED FOR REVIEW	M.G.
0	09/29/22	ISSUED FOR PERMIT	CDA
1	12/01/22	ISSUED FOR PERMIT	JM
2	04/21/23	ISSUED FOR PERMIT	M.G.
3	06/05/23	ISSUE FOR PERMIT	M.G.
4	06/20/23	ISSUED FOR PERMIT	M.G.

RFDS REV DATE	REVISION:
01/17/23	1

Registered Professional Engineer (Civil)
CERTIFICATE NO.
68312
KYLE A.
FORTIN
6/21/23
Date Signed
ARIZONA, U.S.A.

SPRINT PH54XC026

PH50434A
4650 N MAMMOTH MINE RD
APACHE JUNCTION, AZ 85119
PINAL COUNTY

SHEET TITLE

ANTENNA PLANS

SHEET NUMBER

A-4

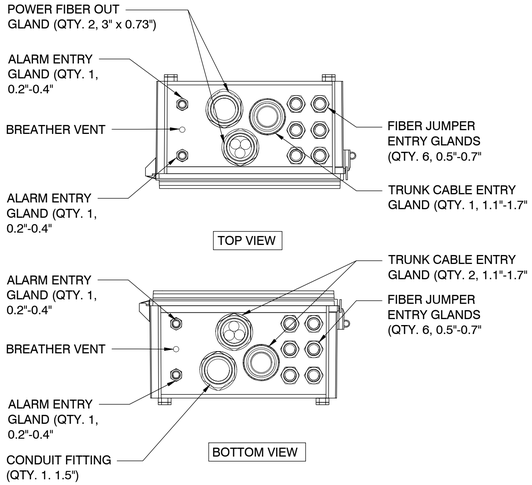

NOTE:
FIBER RADIUS NOT TO EXCEED 3"

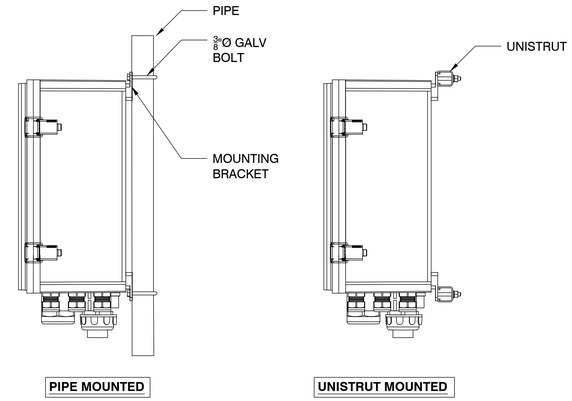

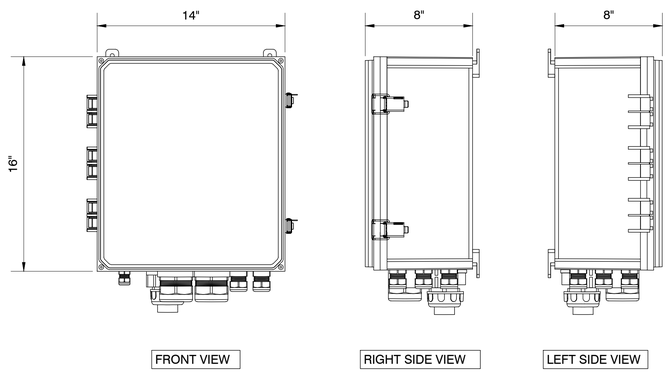

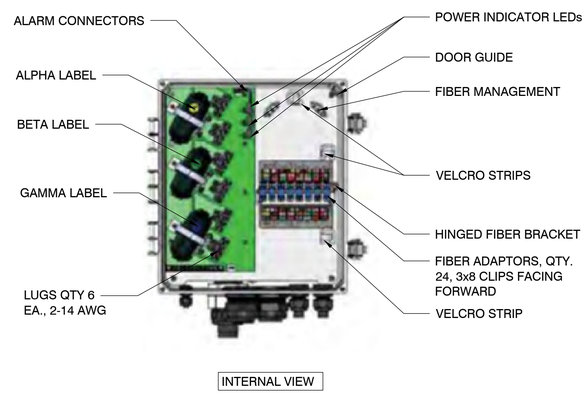

HCS 2.0 JUNCTION BOX DETAIL

SCALE: NTS | 1

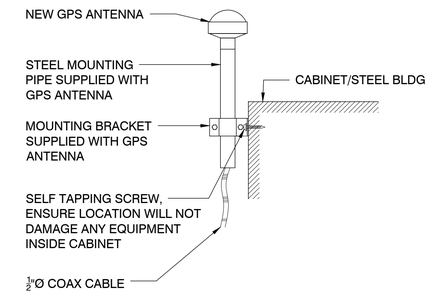

GPS ANTENNA MOUNTING DETAIL

SCALE: NTS | 2

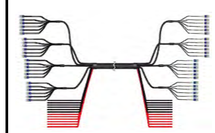

HFT1206-48S61-125

HELIAX® FIBERFEED® 6 X 24: TWELVE 6 AWG CONDUCTORS, 48 SINGLE MODE FIBERS. TOP BREAKOUT: BLUNT CUT POWER CONDUCTORS, SWITCHABLE DLC CONNECTOR. BOTTOM BREAKOUT: BLUNT CUT POWER CONDUCTORS, DLC CONNECTORS, 125 FT

General Specifications

CONDUCTORS, QUANTITY	12
CONSTRUCTION TYPE	DIRECT BREAKOUT TRUNK
CENTER CONDUCTOR GAUGE	6 AWG INTERFACE
INTERFACE BODY STYLE, CONNECTOR A	STRAIGHT
INTERFACE BODY STYLE, CONNECTOR B	STRAIGHT
INTERFACE FEATURE, CONNECTOR A	STANDARD
INTERFACE FEATURE, CONNECTOR B	STANDARD
INTERFACE, CONNECTOR A	DLC
INTERFACE, CONNECTOR B	DLC
MINIMUM BEND RADIUS	472.4 MM | 18.6 IN
MINIMUM BEND RADIUS, FURCATION	30.0 MM | 1.2 IN

Dimensions

CORD LENGTH	38.10 M | 125.00 FT
KG/KM CABLE WEIGHT	2544.0
DIAMETER OVER JACKET	39.38 MM | 1.55 IN

HYBRID CABLE DETAIL

SCALE: NTS | 3

T-MOBILE RADIO	
DIMENSIONS (WXHXD)	12.1"x27.3"x5.2"
WEIGHT W/O COVERS OR BRACKETS	70.5 lbs. (WITHOUT COVER)

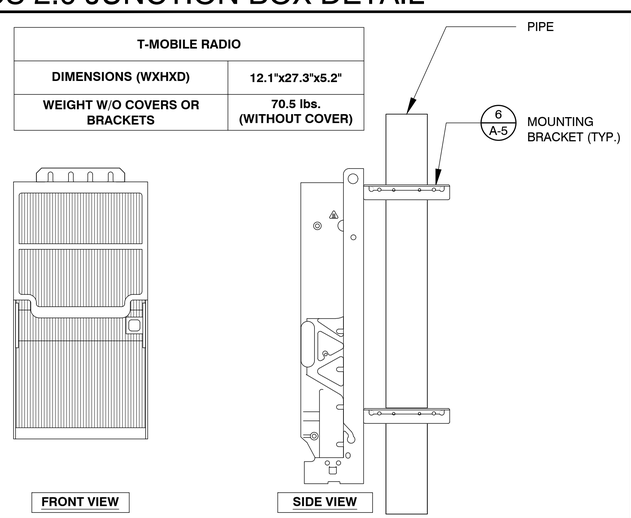

RADIO DETAIL

SCALE: NTS | 4

T-MOBILE RADIO	
DIMENSIONS (WXHXD)	12.13"x22.05"x7.44"
WEIGHT W/O COVERS OR BRACKETS	38 kg/ 83.8 lbs.

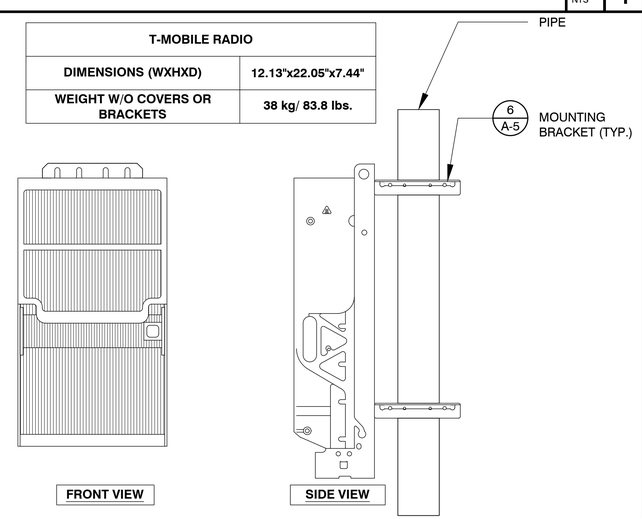

RADIO DETAIL

SCALE: NTS | 5

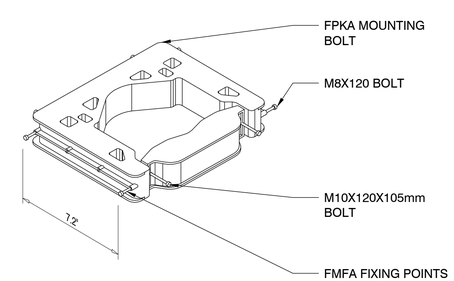

FPKA DETAIL

SCALE: NTS | 6

PREPARED FOR:

T-Mobile

2601 W. BROADWAY RD
TEMPE, AZ 85282

CONSULTING FIRM

PINNACLE CONSULTING, INC.
Construction - Project Management - Site Development

1426 N. MARVIN STREET #101
GILBERT, AZ 85233

PROJECT NO:	PH50434A
DRAWN BY:	M.G.
CHECKED BY:	KF

REV	DATE	DESCRIPTION	BY
A	06/22/22	ISSUED FOR REVIEW	M.G.
0	09/29/22	ISSUED FOR PERMIT	CDA
1	12/01/22	ISSUED FOR PERMIT	JM
2	04/21/23	ISSUED FOR PERMIT	M.G.
3	06/05/23	ISSUE FOR PERMIT	M.G.
4	06/20/23	ISSUED FOR PERMIT	M.G.

RFDS REV DATE	REVISION:
01/17/23	1

Registered Professional Engineer (Civil)
CERTIFICATE NO. 68312
KYLE A. FORTIN
6/21/23
Date Signed
ARIZONA, U.S.A.

SPRINT PH54XC026

PH50434A
4650 N MAMMOTH MINE RD
APACHE JUNCTION, AZ 85119
PINAL COUNTY

SHEET TITLE

DETAILS

SHEET NUMBER

A-5

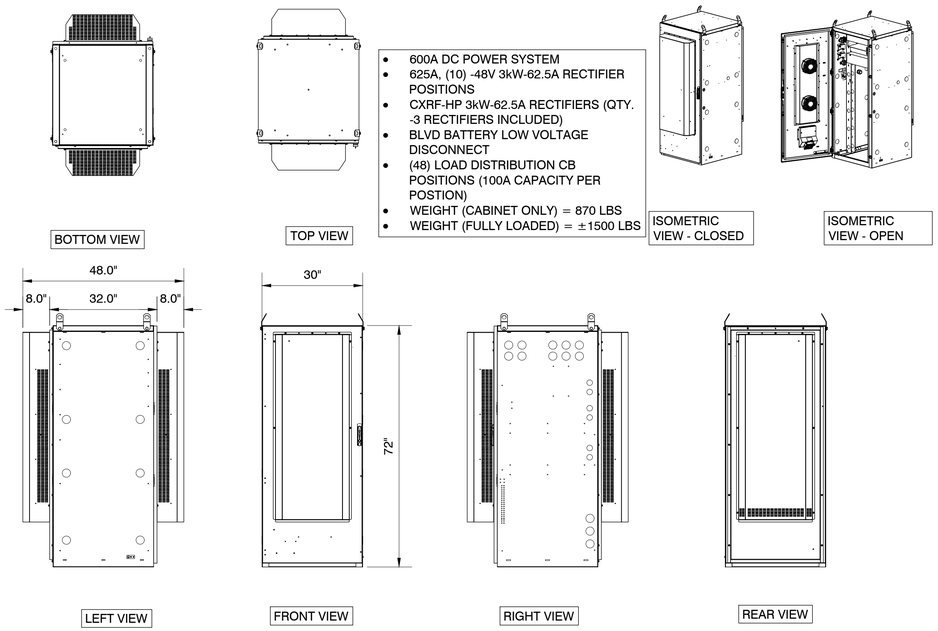

- 600A DC POWER SYSTEM
- 625A, (10) -48V 3kW-62.5A RECTIFIER POSITIONS
- CXRF-HP 3kW-62.5A RECTIFIERS (QTY. -3 RECTIFIERS INCLUDED)
- BLVD BATTERY LOW VOLTAGE DISCONNECT
- (48) LOAD DISTRIBUTION CB POSITIONS (100A CAPACITY PER POSTION)
- WEIGHT (CABINET ONLY) = 870 LBS
- WEIGHT (FULLY LOADED) = ±1500 LBS

SITE SUPPORT CABINET DETAIL

SCALE: NTS | 1

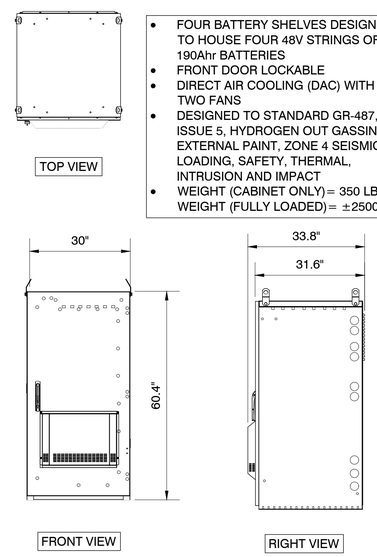

- FOUR BATTERY SHELVES DESIGNED TO HOUSE FOUR 48V STRINGS OF 190Ahr BATTERIES
- FRONT DOOR LOCKABLE
- DIRECT AIR COOLING (DAC) WITH TWO FANS
- DESIGNED TO STANDARD GR-487, ISSUE 5, HYDROGEN OUT GASSING, EXTERNAL PAINT, ZONE 4 SEISMIC LOADING, SAFETY, THERMAL, INTRUSION AND IMPACT
- WEIGHT (CABINET ONLY)= 350 LBS
  WEIGHT (FULLY LOADED)= ±2500 LBS

BATTERY CABINET DETAIL

SCALE: NTS | 2

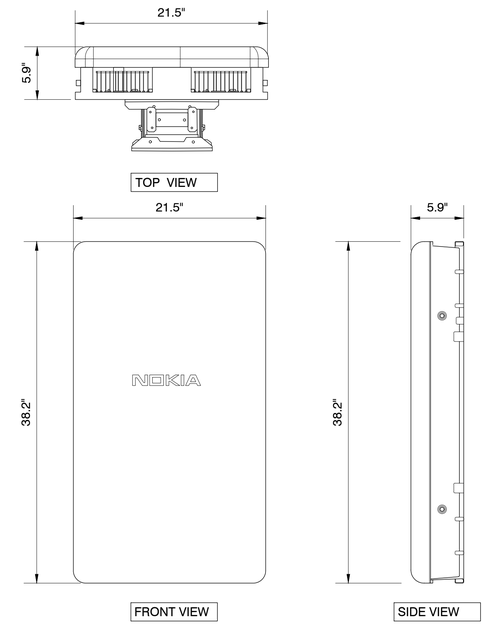

ANTENNA WEIGHT: ±108 LBS.
ANTENNA DIMENSIONS: 38.2"x21.5"x5.9"

ANTENNA SPECIFICATIONS

SCALE: NTS | 3

NEW ANTENNA SPECIFICATIONS				
DESCRIPTION	HEIGHT	WIDTH	DEPTH	ANTENNA ONLY WEIGHT
OCTOPORT ANTENNA	96"	25.2"	9.3"	118.6 LBS.

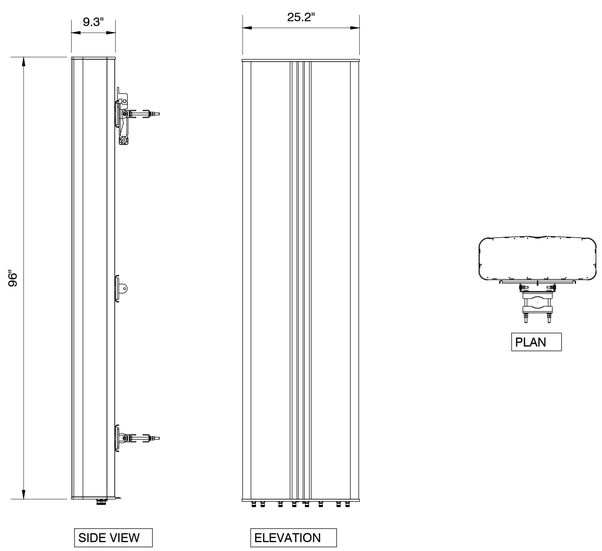

ANTENNA SPECIFICATIONS

SCALE: NTS | 4

BREAKOUT PENDANT SPECIFICATIONS			
HEIGHT	WIDTH	DEPTH	WEIGHT
14.9"	9.3"	5.8"	1.61 LB/FT

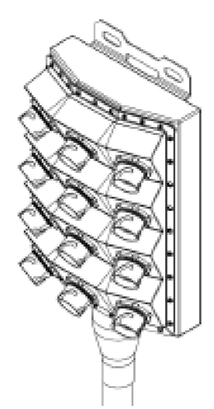

HCS 2.0 BREAKOUT PENDANT DETAIL

SCALE: NTS | 5

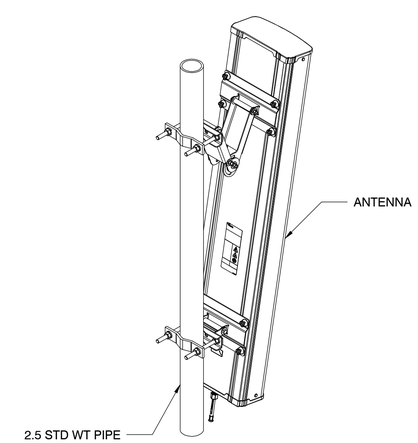

ANTENNA ATTACHMENT DETAIL

SCALE: NTS | 6

PREPARED FOR:

T-Mobile

2601 W. BROADWAY RD
TEMPE, AZ 85282

CONSULTING FIRM

PINNACLE CONSULTING, INC.
Construction - Project Management - Site Development

1426 N. MARVIN STREET #101
GILBERT, AZ 85233

PROJECT NO:	PH50434A
DRAWN BY:	M.G.
CHECKED BY:	KF

REV	DATE	DESCRIPTION	BY
A	06/22/22	ISSUED FOR REVIEW	M.G.
0	09/29/22	ISSUED FOR PERMIT	CDA
1	12/01/22	ISSUED FOR PERMIT	JM
2	04/21/23	ISSUED FOR PERMIT	M.G.
3	06/05/23	ISSUE FOR PERMIT	M.G.
4	06/20/23	ISSUED FOR PERMIT	M.G.

RFDS REV DATE	REVISION:
01/17/23	1

Registered Professional Engineer (Civil)
CERTIFICATE NO. 68312
KYLE A. FORTIN
6/21/23
Date Signed
ARIZONA, U.S.A.

SPRINT PH54XC026

PH50434A
4650 N MAMMOTH MINE RD
APACHE JUNCTION, AZ 85119
PINAL COUNTY

SHEET TITLE

DETAILS

SHEET NUMBER

A-6

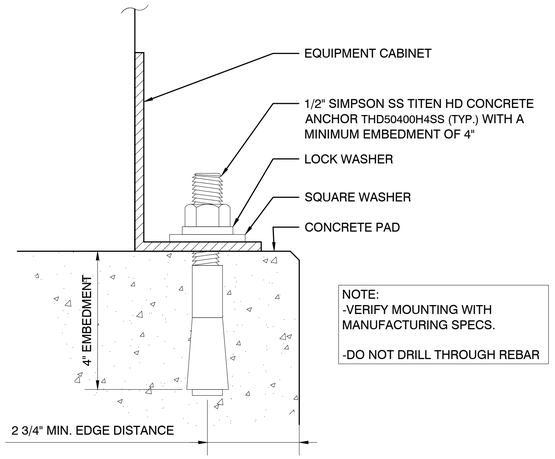

NOTE:
-VERIFY MOUNTING WITH MANUFACTURING SPECS.

-DO NOT DRILL THROUGH REBAR

BOLT DOWN DETAIL

SCALE: NTS | 1

PLAN VIEW

CABINET SPECIFICATIONS	
MANUF.	DELTA
HEIGHT	39"
WIDTH	20.2"
DEPTH	11.2"
WEIGHT	150 LB

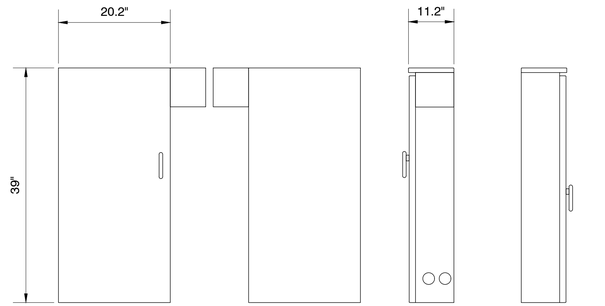

FRONT ELEVATION | SIDE ELEVATION | SIDE ELEVATION | SIDE ELEVATION

225A PPC CABINET DETAIL

SCALE: NTS | 2

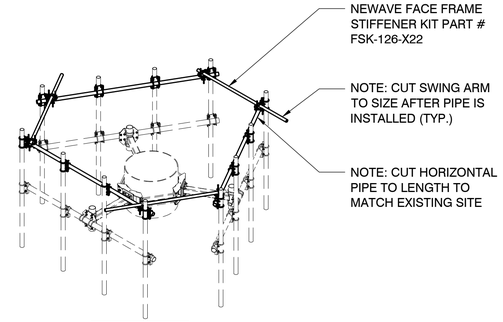

ISOMETRIC VIEW

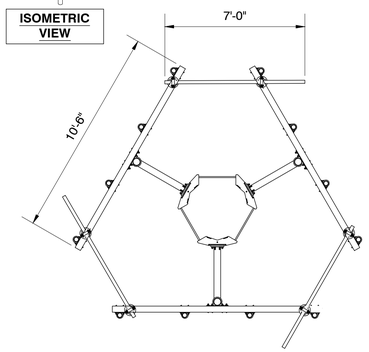

TOP VIEW

FACE FRAME STIFFENER DETAIL

SCALE: NTS | 3

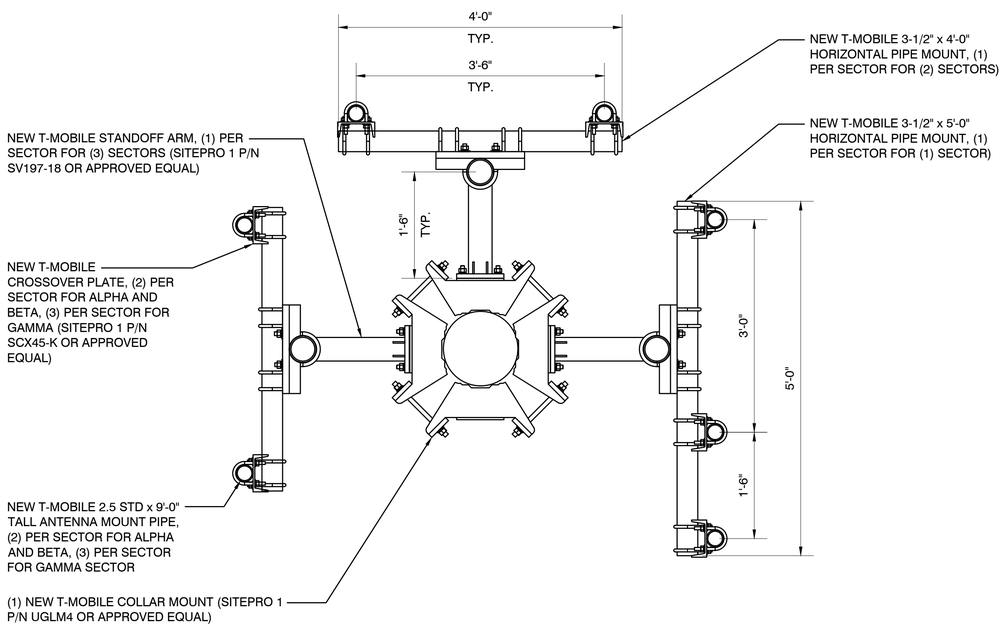

ANTENNA MOUNT DETAIL

SCALE: NTS | 4

NOT USED

SCALE: NTS | 5

PREPARED FOR:

T-Mobile

2601 W. BROADWAY RD
TEMPE, AZ 85282

CONSULTING FIRM

PINNACLE CONSULTING, INC.
Construction - Project Management - Site Development

1426 N. MARVIN STREET #101
GILBERT, AZ 85233

PROJECT NO:	PH50434A
DRAWN BY:	M.G.
CHECKED BY:	KF

REV	DATE	DESCRIPTION	BY
A	06/22/22	ISSUED FOR REVIEW	M.G.
0	09/29/22	ISSUED FOR PERMIT	CDA
1	12/01/22	ISSUED FOR PERMIT	JM
2	04/21/23	ISSUED FOR PERMIT	M.G.
3	06/05/23	ISSUE FOR PERMIT	M.G.
4	06/20/23	ISSUED FOR PERMIT	M.G.

RFDS REV DATE	REVISION:
01/17/23	1

Registered Professional Engineer (Civil)
CERTIFICATE NO. 68312
KYLE A. FORTIN
6/21/23
Date Signed
ARIZONA, U.S.A.

SPRINT PH54XC026

PH50434A
4650 N MAMMOTH MINE RD
APACHE JUNCTION, AZ 85119
PINAL COUNTY

SHEET TITLE

DETAILS

SHEET NUMBER

A-7

GENERAL NOTES:

1. SUBMITTAL OF BID INDICATES THAT THE CONTRACTOR IS COGNIZANT OF ALL JOB SITE. CONDITIONS AND WORK TO BE PERFORMED UNDER THIS CONTRACT.
2. CONTRACTOR SHALL PERFORM ALL VERIFICATIONS, OBSERVATION TESTS, AND EXAMINATION OF WORK PRIOR TO ORDERING OF ANY EQUIPMENT AND THE ACTUAL CONSTRUCTION. CONTRACTOR SHALL ISSUE A WRITTEN NOTICE OF ALL FINDINGS TO THE PROJECT MANAGER LISTING ALL MALFUNCTIONS, FAULTY EQUIPMENT AND DISCREPANCIES.
3. THESE PLANS ARE DIAGRAMMATIC ONLY, FOLLOW AS CLOSELY AS POSSIBLE.
4. COORDINATE ALL WORK BETWEEN TRADES AND ALL OTHER SCHEDULING AND PROVISIONARY CIRCUMSTANCES SURROUNDING THE PROJECT.
5. CONTRACTOR SHALL PROVIDE ALL LABOR, MATERIALS, INSURANCE, EQUIPMENT, INSTALLATION CONSTRUCTION TOOLS, TRANSPORTATION, ETC., FOR COMPLETE AND FUNCTIONALLY OPERATING SYSTEMS, ENERGIZED AND READY FOR USE THROUGHOUT AS INDICATED ON DRAWINGS, AS SPECIFIED HEREIN AND/OR AS OTHERWISE REQUIRED.
6. ALL MATERIALS AND EQUIPMENT SHALL BE NEW AND IN PERFECT CONDITION WHEN INSTALLED AND SHALL BE OF THE BEST GRADE AND OF THE SAME MANUFACTURER THROUGHOUT FOR EACH CLASS OR GROUP OF EQUIPMENT. ELECTRICAL MATERIALS SHALL BE LISTED AND APPROVED BY UNDERWRITER'S LABORATORIES AND SHALL BEAR THE INSPECTION LABEL "J" WHERE SUBJECT TO SUCH APPROVAL. MATERIALS SHALL MEET WITH APPROVAL OF ALL GOVERNING BODIES HAVING JURISDICTION OVER THE CONSTRUCTION. MATERIALS SHALL BE MANUFACTURED IN ACCORDANCE WITH ALL CURRENT APPLICABLE STANDARDS ESTABLISHED BY ANSI, NEMA AND NBFU. ALL MATERIALS AND EQUIPMENT SHALL BE APPROVED FOR THEIR INTENDED USE AND LOCATION.
7. ALL WORK SHALL COMPLY WITH ALL APPLICABLE GOVERNING STATE, COUNTY AND CITY CODES AND OSHA, NFPA, NEC & ASHRAE REQUIREMENTS.
8. ENTIRE JOB SHALL BE GUARANTEED FOR A PERIOD OF ONE (1) YEAR AFTER THE DATE OF JOB ACCEPTANCE. ALL WORK, MATERIAL AND EQUIPMENT FOUND TO BE FAULTY DURING THAT PERIOD SHALL BE CORRECTED AT ONCE, UPON WRITTEN NOTIFICATION, AT THE EXPENSE OF THE CONTRACTOR.
9. PROPERLY SEAL ALL PENETRATIONS USING WATER-TIGHT SILICONE SEALANT.
10. DELIVER ALL BROCHURES, OPERATING MANUALS, CATALOGS AND SHOP DRAWINGS TO THE PROJECT MANAGER AT JOB COMPLETION. PROVIDE MAINTENANCE MANUALS FOR MECHANICAL EQUIPMENT. AFFIX MAINTENANCE LABELS TO MECHANICAL EQUIPMENT.
11. ALL CONDUCTORS SHALL BE COPPER. MINIMUM CONDUCTOR SIZE SHALL BE #12 AWG.,UNLESS OTHERWISE NOTED. CONDUCTORS SHALL BE TYPE THHN, RATED IN ACCORDANCE WITH NEC 110-14(c).
12. ALL CIRCUIT BREAKERS, FUSES AND ELECTRICAL EQUIPMENT SHALL HAVE AN INTERRUPTING RATING NOT LESS THE MAXIMUM INTERRUPTING CURRENT TO WHICH THEY MAY BE SUBJECTED.
13. THE ENTIRE ELECTRICAL INSTALLATION SHALL BE GROUNDED IN ACCORDANCE WITH THE NATIONAL ELECTRICAL CODE; ARTICLES 250 & 810 AND THE UTILITY COMPANY STANDARDS
14. THE MAXIMUM 12-MONTH DEMAND LOAD NOT AVAILABLE. CONTRACTOR TO COORDINATE WITH POWER COMPANY TO OBTAIN MAXIMUM DEMAND LOAD AND MULTIPLY BY 1.25, ADD NEW LOADS, REMOVE LOADS BEING REMOVED, AND VERIFY NEW MAXIMUM DEMAND LOAD DOES NOT OVERLOAD ANY PORTION OF EXISTING ELECTRICAL SYSTEM. NOTIFY ENGINEER IF OVERLOAD IS FOUND
15. CONTRACTOR IS RESPONSIBLE FOR LOADING ON ALL PANELS AND FEEDERS PER THE N.E.C. CONTRACTOR SHALL KEEP CIRCUIT CONTINUITY TO DEVICES TO REMAIN. ELECTRICAL CONTRACTOR SHALL VERIFY THAT ALL EXISTING AND PROPOSED LOADS PLACE ON EXISTING PANELS DO NOT EXCEED THE MAXIMUM LOADING REQUIRED PER THE LATEST EDITION ON THE N.E.C. NOTIFY ENGINEER IF OVERLOAD IS POSSIBLE.

CONDUIT NOTES:

1. RIGID CONDUIT SHALL BE U.L. LABEL GALVANIZED ZINC COATED WITH ZINC INTERIOR AND SHALL BE USED WHEN INSTALLED IN OR UNDER CONCRETE SLABS, IN CONTACT WITH THE EARTH, UNDER PUBLIC ROADWAYS, IN MASONRY WALLS OR EXPOSED ON BUILDING EXTERIOR. RIGID CONDUIT IN CONTACT WITH EARTH SHALL BE 1/2 LAPPED WRAPPED WITH HUNTS WRAP PROCESS NO. 3.
2. ELECTRICAL METALLIC TUBING SHALL HAVE U.L. LABEL, FITTINGS SHALL BE GLAND RING COMPRESSION TYPE. EMT SHALL BE USED ONLY FOR INTERIOR RUNS.
3. LIQUID-TIGHT FLEXIBLE METAL CONDUIT SHALL BE U.L. LISTED AND SHALL BE USED AT FINAL CONNECTIONS TO MECHANICAL EQUIPMENT & RECTIFIERS AND WHERE PERMITTED BY CODE. ALL CONDUIT IN EXCESS OF SIX FEET IN LENGTH SHALL CONTAIN A FULL-SIZE GROUND CONDUCTOR.
4. CONDUIT RUNS SHALL BE SURFACE MOUNTED ON CEILINGS OR WALLS UNLESS NOTED OTHERWISE. ALL CONDUIT SHALL RUN PARALLEL OR PERPENDICULAR TO WALLS, FLOOR, CEILING, OR BEAMS. VERIFY EXACT ROUTING OF ALL EXPOSED CONDUIT WITH THE PROJECT MANAGER PRIOR TO INSTALLING.
5. PVC CONDUIT MAY BE PROVIDED ONLY WHERE SHOWN, OR IN UNDERGROUND INSTALLATIONS. PROVIDE UV-RESISTANT CONDUIT WHERE EXPOSED TO THE ATMOSPHERE. PROVIDE GROUND CONDUCTOR IN ALL PVC RUNS; EXCEPT WHERE PERMITTED BY CODE TO OMIT.
6. ALL ELECTRICAL EQUIPMENT SHALL BE LABELED WITH PERMANENT ENGRAVED PLASTIC LABELS. BACKGROUND SHALL BE BLACK WITH WHITE LETTERS; EXCEPT AS REQUIRED BY CODE TO FOLLOW A DIFFERENT SCHEME.
7. UPON COMPLETION OF WORK, CONDUCT CONTINUITY, SHORT CIRCUIT, AND FALL OF POTENTIAL GROUNDING TESTS FOR APPROVAL. SUBMIT TEST REPORTS TO PROJECT MANAGER. GROUNDING SYSTEM RESISTANCE SHALL NOT EXCEED 5 OHMS. IF THE RESISTANCE VALUE IS EXCEEDED, NOTIFY THE PROJECT MANAGER FOR FURTHER INSTRUCTION ON METHODS FOR REDUCING THE RESISTANCE VALUE.
8. CLEAN PREMISES OF ALL DEBRIS RESULTING FROM WORK AND LEAVE WORK IN A COMPLETE AND UNDAMAGED CONDITION. LEGALLY DISPOSE OF ALL REMOVED, UNUSED AND EXCESS MATERIAL GENERATED BY THE WORK OF THIS CONTRACT. DELIVER ITEMS INDICATED ON THE DRAWINGS TO THE OWNER IN GOOD CONDITION. OBTAIN SIGNED RECEIPT UPON DELIVERY.
9. COORDINATE WITH UTILITY COMPANY FOR CONNECTION OF TEMPORARY AND PERMANENT POWER TO THE SITE. THE TEMPORARY POWER AND ALL HOOKUP COSTS SHALL BE PAID BY THE CONTRACTOR.
10. VERIFY ALL EXISTING CIRCUITRY PRIOR TO REMOVAL AND NEW WORK. MAINTAIN POWER TO ALL OTHER AREAS & CIRCUITS NOT SCHEDULED FOR REMOVAL.

GENERAL NOTES | 1

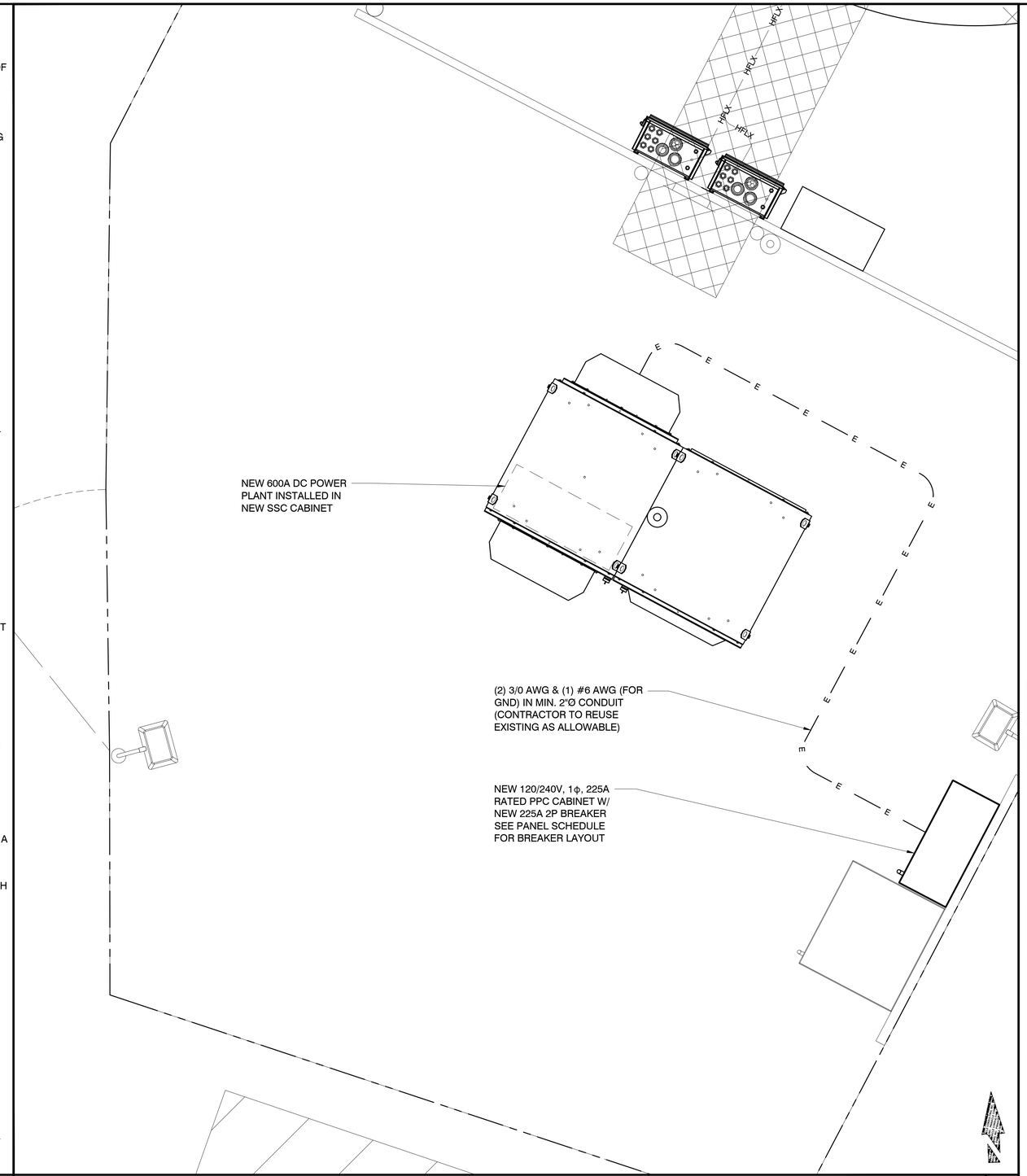

ENLARGED ELECTRICAL PLAN | 24"x36" SCALE: 1" = 1'-0" 11"x17" SCALE: 1/2" = 1'-0" | 2

PREPARED FOR:

T-Mobile

2601 W. BROADWAY RD
TEMPE, AZ 85282

CONSULTING FIRM

PINNACLE CONSULTING, INC.
Construction - Project Management - Site Development

1426 N. MARVIN STREET #101
GILBERT, AZ 85233

PROJECT NO:	PH50434A
DRAWN BY:	M.G.
CHECKED BY:	KF

REV	DATE	DESCRIPTION	BY
A	06/22/22	ISSUED FOR REVIEW	M.G.
0	09/29/22	ISSUED FOR PERMIT	CDA
1	12/01/22	ISSUED FOR PERMIT	JM
2	04/21/23	ISSUED FOR PERMIT	M.G.
3	06/05/23	ISSUE FOR PERMIT	M.G.
4	06/20/23	ISSUED FOR PERMIT	M.G.

RFDS REV DATE	REVISION:
01/17/23	1

Registered Professional Engineer (Civil)
CERTIFICATE NO. 68312
KYLE A. FORTIN
6/21/23
Date Signed
ARIZONA, U.S.A.

SPRINT PH54XC026

PH50434A
4650 N MAMMOTH MINE RD
APACHE JUNCTION, AZ 85119
PINAL COUNTY

SHEET TITLE

ELECTRICAL NOTES & ELECTRICAL PLAN

SHEET NUMBER

E-1

NEW

ELECTRICAL PANEL SCHEDULE

PANEL: PPC

65/10KAIC SERIES RATED

LOCATION: PPC CABINET

MOUNTING: SURFACE

NEMA RATING:3R

VOLTAGE: 240 / 120 V 1Ø,3W

MAINS: 225 A MCB

BUS: 225 A CU

LOAD DESCRIPTION	EMT COND	CU GRND	PHASE NEUT	CKT BRKR	CIR NO.	LOAD AMPS PHASE A	LOAD AMPS PHASE B	CIR NO.	CKT BRKR	PHASE NEUT	CU GRND	EMT COND	LOAD DESCRIPTION
MISC	2"	6	3/0	200	1	0.0			60	4	10		MISC
SITE SUPPORT CABINET (SSC)						0.0		13					SURGE
MISC					2		125.0			4			MISC
Cont.							0.0	14	2				Cont.
MISC			3/0		3	125.0			20	12	12	3/4"	LIGHTING
Cont.						1.8		15	1				TECH LIGHTS
MISC					4		0.0		10	12	12	3/4"	MECHANICAL
Cont.				2			1.5	16	1				FAN
BUSSED SPACE					5	0.0			15	12	12	3/4"	RECEPTACLES
						3.0		17	1				GFI
BUSSED SPACE					6		0.0						BUSSED SPACE
							0.0	18					
BUSSED SPACE					7	0.0							BUSSED SPACE
						0.0		19					
BUSSED SPACE					8		0.0						BUSSED SPACE
							0.0	20					
BUSSED SPACE					9	0.0							BUSSED SPACE
						0.0		21					
BUSSED SPACE					10		0.0						BUSSED SPACE
							0.0	22					
BUSSED SPACE					11	0.0							BUSSED SPACE
						0.0		23					
BUSSED SPACE					12		0.0						BUSSED SPACE
							0.0	24					
AMPS PER PHASE (CODE LOAD)						129.8	126.5						

CONTRACTOR TO INSTALL APPROVED HANDLE TIE ON ALL SHARED NEUTRAL CIRCUITS.

1 PHASE DEMAND (VA)	
LIGHTING	216.0
25% OF LIGHTING	54.0
RECEPTACLES	360.0
MECHANICAL	0.0
25% LARGEST MOTOR	0.0
MISCELLANEOUS	30,000.0
	0.0
	0.0
	0.0
	0.0
	0.0
TOTAL VA	30,630.0

30.6 KVA @ 240 V 1Ø

127.6 A @ 240 V 1Ø

SYMBOL LIST

CODE LOAD SUMMARY

PANEL 'PPC' @ 240V = 127.6 A

FAULT CALCULATIONS

FAULT AVAILABLE AT THE SERVICE: 15,493 AMPS RMS SYMM PER SRP TABLES

SERVICE VOLTAGE: 120/240V, 1PH

PPC

DISTANCE	50 Feet
CONDUIT TYPE	Conductive
CONDUCTOR	#4/0
Fault Available L-L:	12,145A

CONTRACTOR SHALL TAG EACH CIRCUIT CONDUCTOR AT EACH J-BOX, OUTLET, SWITCH, ETC. WITH THE CIRCUITS IDENTIFICATION.

CALL 4-7 WORKING DAYS BEFORE YOU DIG

263-1100 INSIDE MARICOPA COUNTY

1-800-STAKE-IT OUTSIDE MARICOPA COUNTY

NOTE:
#6 COPPER WIRE AND GREATER SHALL BE (COPPER) THWN WIRE OR (COPPER) XHHW.

NOTE:
PRIOR TO RUNNING CONDUIT ROUTE - CONTRACTOR SHALL CONTACT THE T-MOBILE PROJECT MANAGER AND VERIFY THE EQUIPMENT CABINET LAYOUT CONFIGURATION AND ROUTE CONDUITS ACCORDINGLY.

DC -48V FEEDER CABLING CHART

CALCULATIONS ARE BASED ON WORST CASE FULL LOAD AMPS AT 104A -48VDC, NOT EXCEDING 3% VOLTAGE DROP. IF FIELD CONDITIONS ARE DIFFERENT THAN INDICATED, CONTACT ENGINEER FOR REVISED CALCULATIONS.

DISTANCE FROM FUEL CELL TO EQUIP. CABINET.	-48V, DC SINGLE CABLE	-48V, DC PARALLEL CABLE	CONDUIT SIZE
1'-70'	1-#1/0 CU. AWG		1-1/4"
71-90'	1-#2/0 CU. AWG		1-1/2"
91'-110'	1-#3/0 CU. AWG		1-1/2"
111'-140'	1-#4/0 CU. AWG		2"
141'-175'		2-#2/0 CU. AWG	2"

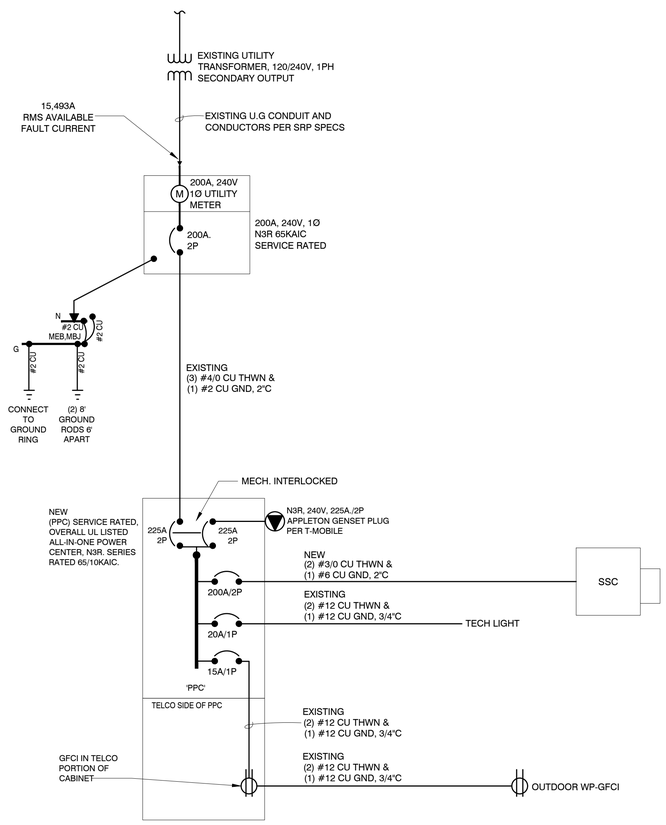

PANEL 'PPC' SHALL BE SERIES RATED WITH THEIR RESPECTIVE UPSTREAM REMOTE MAIN PROTECTIVE DEVICES. IF ANY DISCREPANCY OCCURS, REPORT THE ISSUE TO THE ARCHITECT.

A TWO TIER (65KA/10KA) SYSTEM IS SPECIFIED.

SEE THE SERIES RATING NOTES, SHEET E-1.

PREPARED FOR:

T-Mobile

2601 W. BROADWAY RD
TEMPE, AZ 85282

CONSULTING FIRM

PINNACLE CONSULTING, INC.

Construction - Project Management - Site Development

1426 N. MARVIN STREET #101
GILBERT, AZ 85233

PROJECT NO:	PH50434A
DRAWN BY:	M.G.
CHECKED BY:	KF

REV	DATE	DESCRIPTION	BY
A	06/22/22	ISSUED FOR REVIEW	M.G.
0	09/29/22	ISSUED FOR PERMIT	CDA
1	12/01/22	ISSUED FOR PERMIT	JM
2	04/21/23	ISSUED FOR PERMIT	M.G.
3	06/05/23	ISSUE FOR PERMIT	M.G.
4	06/20/23	ISSUED FOR PERMIT	M.G.

RFDS REV DATE	REVISION:
01/17/23	1

Registered Professional Engineer (Civil) CERTIFICATE NO. 68312 KYLE A. FORTIN 6/21/23 ARIZONA U.S.A.

SPRINT PH54XC026

PH50434A
4650 N MAMMOTH MINE RD
APACHE JUNCTION, AZ 85119
PINAL COUNTY

SHEET TITLE

ONE-LINE DIAGRAM & PANEL SCHEDULE

SHEET NUMBER

E-2

GENERAL NOTES:

1. ALL GROUNDING LEADS INSTALLED TO ENSURE A SMOOTH PATH TO COUNTERPOISE WITHOUT KINKS OR SHARP BENDS OR RETURN UPWARDS.
2. ANY EXCEPTIONS TO THIS BASIC GROUNDING DESIGN GUIDELINE, ROUTING DESIGN, OR MODIFICATIONS, WILL BE DOCUMENTED AND DIMENSIONED BY WAY OF RED LINE DRAWINGS. IT IS THE RESPONSIBILITY OF THE SELECTED CONTRACTOR TO ENSURE THE NEWLY INSTALLED GROUNDING SYSTEM MEETS THE T-MOBILE STANDARD OF 5 OHMS OR LESS.
3. CONTRACTOR TO REUSE EXISTING SECTOR GROUND BARS WHEN ABLE. CONTRACTOR TO DETERMINE IF EXISTING GROUND BAR NEEDS TO BE REPLACED.
4. CONTRACTOR TO REUSED EXISTING GROUND LEADS WHEN ABLE.
5. WHEN REQUIRED, CONTRACTOR TO INSTALL #6 AWG GREEN STRANDED INSULATED GROUND WIRE.
6. ALL EQUIPMENT GROUNDS TO BE MECHANICAL CONNECTION UNLESS OTHERWISE NOTED.

GENERAL NOTES | 1

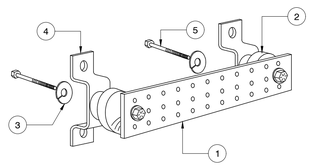

NOTES:

1) COPPER GROUND BAR OR APPROVED EQUAL, 1/4" x 4" X 12". HOLE CENTERS TO MATCH NEMA DOUBLE LUG CONFIGURATION.
2) SPACERS AS REQUIRED
3) 5/8" LOCKWASHERS
4) WALL MOUNTING BRACKET
5) 5/8" -11 x 1" H.H.C.S. BOLTS
6) GROUND BAR TO BE PURCHASED FROM ROHN.

GROUND BAR DETAIL | 2

NOT USED | 3

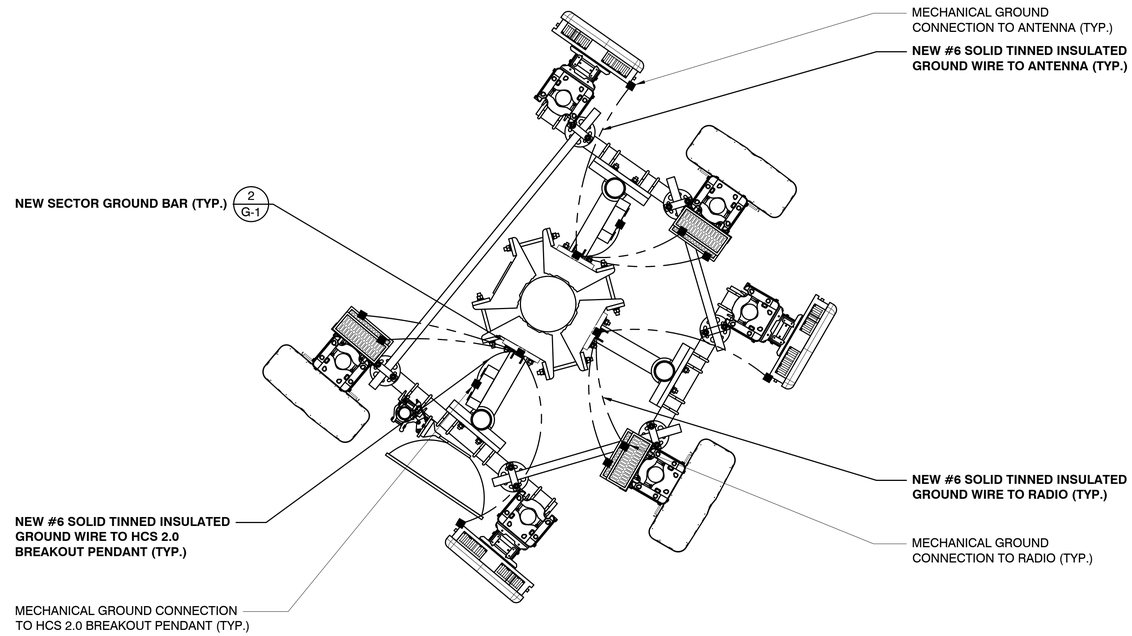

ANTENNA GROUNDING PLAN | 4

24"x36" SCALE: 3/4" = 1'-0"
11"x17" SCALE: 3/8" = 1'-0"

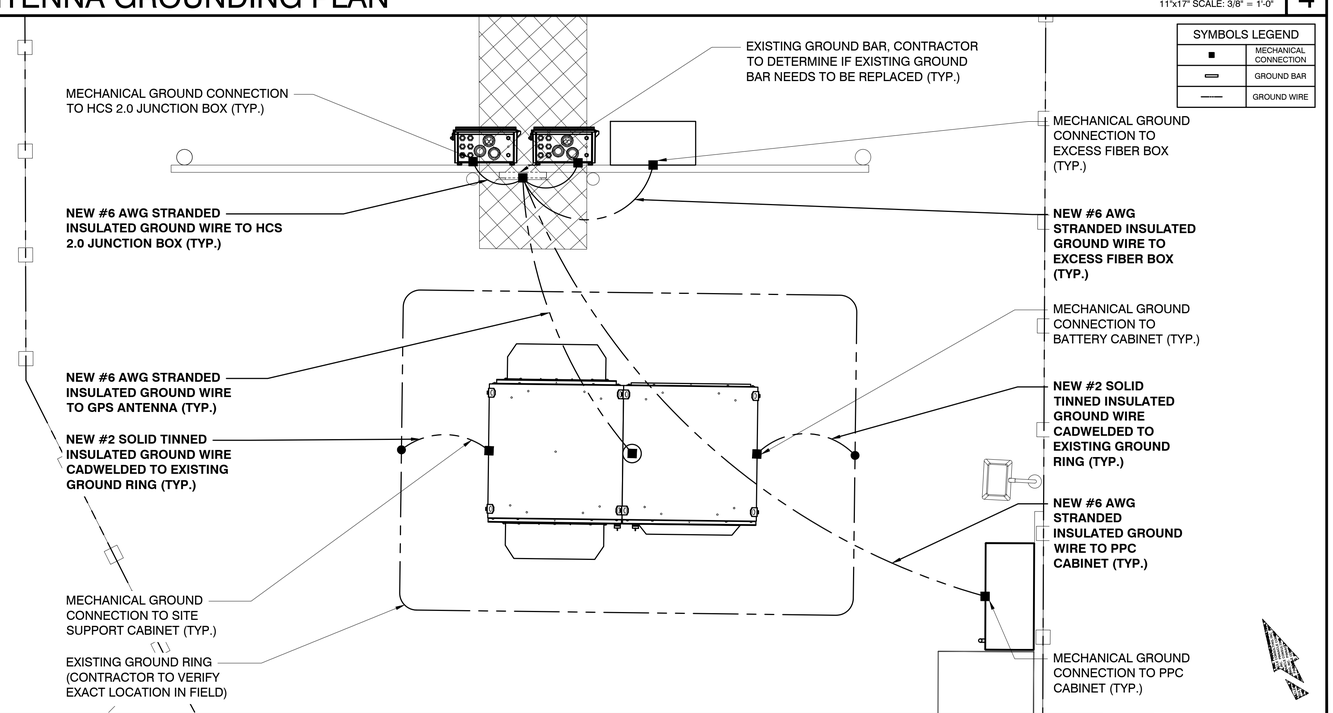

EQUIPMENT GROUNDING PLAN | 5

24"x36" SCALE: 3/4" = 1'-0"
11"x17" SCALE: 3/8" = 1'-0"

PREPARED FOR:

T-Mobile

2601 W. BROADWAY RD
TEMPE, AZ 85282

CONSULTING FIRM

PINNACLE CONSULTING, INC.
Construction - Project Management - Site Development

1426 N. MARVIN STREET #101
GILBERT, AZ 85233

PROJECT NO:	PH50434A
DRAWN BY:	M.G.
CHECKED BY:	KF

REV	DATE	DESCRIPTION	BY
A	06/22/22	ISSUED FOR REVIEW	M.G.
0	09/29/22	ISSUED FOR PERMIT	CDA
1	12/01/22	ISSUED FOR PERMIT	JM
2	04/21/23	ISSUED FOR PERMIT	M.G.
3	06/05/23	ISSUE FOR PERMIT	M.G.
4	06/20/23	ISSUED FOR PERMIT	M.G.

RFDS REV DATE	REVISION:
01/17/23	1

Registered Professional Engineer (Civil)
CERTIFICATE NO. 68312
KYLE A. FORTIN
6/21/23
Date Signed
ARIZONA, U.S.A.

SPRINT PH54XC026

PH50434A
4650 N MAMMOTH MINE RD
APACHE JUNCTION, AZ 85119
PINAL COUNTY

SHEET TITLE
GROUNDING PLAN & GROUNDING NOTES

SHEET NUMBER
G-1

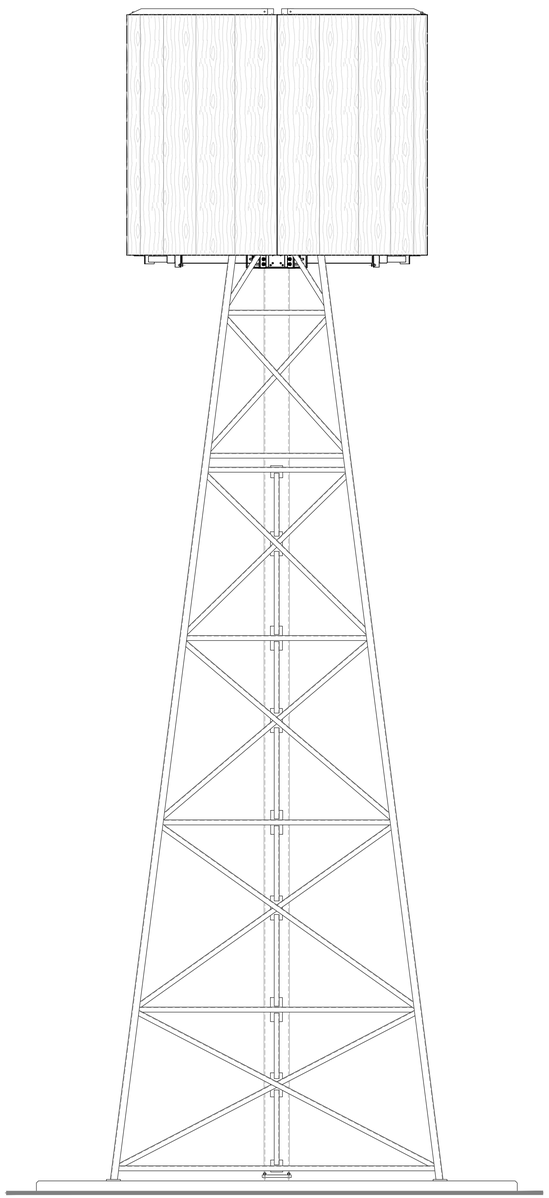

T-MOBILE PH50434A

SITE NAME: SPRINT PH54XC026 GHOST TOWN WINDMILL

4650 N MAMMOTH MINE RD, APACHE JUNCTION, AZ 85119 (PINAL COUNTY)
Latitude: 33.45790833° N Longitude: -111.49159720° W

SHEET INDEX

GSN1.0	PROJECT INFORMATION
GSN2.0	PROJECT NOTES
S1.0	TOWER / SCREEN SECTIONS & ELEVATION
S2.0	UPPER AND LOWER FRP MOUNTS
S3.0	SITEPRO1 HARDWARE
FRP1.0	FRP DETAILS

T-Mobile
1330 W. SOUTHERN AVE. STE A-102
TEMPE, AZ 85282
PHONE: (480) 638-2600 FAX: (480) 638-2852

PINNACLE CONSULTING, INC
Construction - Project Management - Site Development
1426 N. MARVIN STREET #101
GILBERT, AZ 85233

ISE Incorporated
Structural Engineers
P.O. BOX 50039
Phoenix, Arizona 85076
PHONE: 602-403-8614
www.ise-inc.biz

ISE JOB #: 18375

SUMMARY OF SPECIAL INSPECTIONS

NO.	DESCRIPTION OF TYPE OF INSPECTION REQUIRED, LOCATION, REMARKS, ETC	REFERENCED STANDARD	CONTINUOUS / PERIODIC
1).	STEEL CONSTRUCTION		
1.1	MATERIAL VERIFICATION OF HIGH-STRENGTH BOLTS, NUTS AND WASHERS:		
	A). IDENTIFICATION MARKINGS TO CONFORM TO ASTM STANDARDS SPECIFIED IN THE APPROVED CONSTRUCTION DOCUMENTS	AISC 360 SECTION A3.3 & APPLICABLE ASTM MATERIAL STANDARDS	PERIODIC
1.2	INSPECTION OF HIGH-STRENGTH BOLTING:		
	A). SNUG-TIGHT JOINTS	AISC 360 SECTION M2.5	PERIODIC
1.3	MATERIAL VERIFICATION OF STRUCTURAL STEEL AND COLD-FORMED STEEL DECK:		
	A). FOR STRUCTURAL STEEL, IDENTIFICATION MARKINGS TO CONFORM TO AISC 360.	AISC 360 SECTION M5.5	PERIODIC
1.4	MATERIAL VERIFICATION OF WELD FILLER MATERIALS		
	A). IDENTIFICATION MARKINGS TO CONFORM TO AWS SPECIFICATION IN THE APPROVED CONSTRUCTION DOCUMENTS	AISC 360, SECTION A3.5 AND APPLICABLE AWS A5 DOCUMENT	PERIODIC
1.5	INSPECTION OF WELDING:		
	A). SINGLE-PASS FILLET WELDS ≤5/16"	AWS D1.1	PERIODIC
	B). ALL WELDED CONNECTIONS SHALL CONFORM TO THE LATEST VERSION OF THE AMERICAN WELDING SOCIETY A.W.S. D1.1.	AWS D1.1	PERIODIC
	C). WELD ELECTRODES SHALL CONFORM TO E70 ELECTRODES OR WIRE.	E-70XX	PERIODIC
	D). CONTINUOUS INSPECTION OF SHOP WELDING IS NOT REQUIRED. VISUAL INSPECTION SHALL BE PERFORMED BEFORE AND AFTER GALVANIZING.	VISUAL INSPECTION PER EDR	PERIODIC
	E). IF A WELD IS IN QUESTION PER THE VISUAL INSPECTION THEN IT SHALL BE TESTED USING AN APPROPRIATE TEST, EX. DIE PENETRATION, OR MAGNETIC PARTICLE, U.T. ETC.	INSPECT AND REPORT	PERIODIC
1.6	INSPECTION OF STEEL FRAME JOINT DETAILS FOR COMPLIANCE:		
	A). DETAILS SUCH AS BRACING AND STIFFENING.	INSPECT AND REPORT	PERIODIC
	B). MEMBER LOCATIONS.	INSPECT AND REPORT	PERIODIC
	C). APPLICATION OF JOINT DETAILS AT EACH CONNECTION.	INSPECT AND REPORT	PERIODIC
2).	FOUNDATION CONSTRUCTION:		
	A). GEOTECHNICAL ENGINEER OF RECORD MAY SERVE AS THE SPECIAL INSPECTOR FOR THE FOUNDATION CONSTRUCTION.	--	PER 2015 IBC
	B). SHALL VERIFY THE DIAMETER, DEPTH AND QUALITY OF EXCAVATION PRIOR TO THE CONCRETE PLACEMENT.	INSPECT AND REPORT	PERIODIC
	C). SHALL VERIFY THE ON SITE SOILS ARE AS DETERMINED IN THE SOILS REPORT.	INSPECT AND REPORT	PERIODIC
3).	CAST IN PLACE CONCRETE (FOUNDATION):		
	A). REINFORCING CAGE SHALL BE INSPECTED TO ENSURE THAT THE PROPER GEOMETRY, SIZE, LENGTH, QUAINTLY AND GRADE MATERIAL ARE USED.	60 KSI (40 KSI TIES)	INSPECT AND REPORT
	B). ALL CONCRETE SHALL BE AS SPECIFIED BY ACI-318, LATEST EDITION TO ENSURE THE COMPRESSIVE STRENGTH IS ATTAINED AS DESCRIBED IN THE FOUNDATION NOTES.	4000 PSI AT 28 DAYS	INSPECT AND REPORT
	C). CONTINUOUS INSPECTION IS REQUIRED DURING THE CONCRETE PLACEMENT.	--	CONTINUOUS
4).	ANCHOR BOLTS INSTALLED IN CONCRETE:		
	A). PLACEMENT SHALL BE ORIENTED ON PROPER BOLT CIRCLE AS SHOWN ON THE STRUCTURAL PLANS, WITH TOP AND BOTTOM TEMPLATES INSTALLED.	INSPECT AND REPORT	PERIODIC
	B). SHALL BE PLUMB.	INSPECT AND REPORT	PERIODIC
	C). SHALL HAVE A MINIMUM EMBEDMENT (PER PLAN) INTO FOUNDATION	INSPECT AND REPORT	PERIODIC
	D). SHALL BE TIGHTENED TO SNUG TIGHT CONDITION PER AISC STEEL MANUAL OF STEEL CONSTRUCTION.	INSPECT AND REPORT	PERIODIC

DESIGN CRITERIA

2018 IBC/TIA-222-H, 105 MPH (3 SECOND GUST) WIND SPEED

EXPOSURE C, TOPO CLASS 1, RISK CATEGORY II, GROUND ELEVATION 2040'

SEISMIC DATA: S_S=0.242, S_1=0.077, S_{DS}=0.258, S_{D1} = 0.124

SEISMIC DESIGN CATEGORY B

WELDING PER AWS D1.1 LATEST EDITION

DESIGN NOTE: TOWER GEOMETRY AND CONFIGURATION, PER T-MOBILE & PINNACLE CONSULTING 90% CD DRAWING PACKAGE DATED 6/22/22. VERIFY ALL DIMENSIONS PRIOR TO FABRICATION OF ALL FRP PANELS AND MATERIALS ASSOCIATED WITH THIS PROJECT.

LARSON CAMOUFLAGE AND ***ISE INCORPORATED*** ASSUME NO RESPONSIBILITY FOR THE RF PERFORMANCE PROVIDED IN THESE DOCUMENTS.

DRAWING SCALES:
FULL SCALE (1:1) (100%) ON (ANSI D) 34" X 22"
HALF SCALE (1:2) (50%) ON 11" X 17"

T-MOBILE PH50434A
SITE NAME: SPRINT PH54XC026 GHOST TOWN WINDMILL
PROJECT INFORMATION
4650 N MAMMOTH MINE RD, APACHE JUNCTION, AZ 85119 (PINAL COUNTY)
Latitude: 33.45790833° N Longitude: -111.49159720° W

Registered Professional Engineer (Civil)
CERTIFICATE NO. 52229
Glen L. Hunt III
Date Signed 5 May 9, 2023
ARIZONA, U.S.A.
Expires 6/30/2023

PROGRESS LOG

1	05/09/23	FRP MOUNT REVISION	CK
0	04/10/23	ISSUED TO CLIENT	CK
B	04/08/23	12.5' DIA TANK CHANGE	CK
A	04/06/23	ISSUED FOR REVIEW	CK

SHEET NUMBER: GSN1.0
PROGRESS: 1
DRAWING DATE: May 09, 2023

STRUCTURAL STEEL NOTES

1. THE FABRICATION AND ERECTION OF STRUCTURAL STEEL SHALL CONFORM TO THE AISC SPECIFICATION FOR MANUAL OF STEEL CONSTRUCTION, LOAD AND RESISTANCE FACTOR DESIGN, 13th EDITION.
2. UNLESS OTHERWISE NOTED, ALL STRUCTURAL ELEMENTS SHALL CONFORM TO THE FOLLOWING REQUIREMENTS:

   STRUCTURAL STEEL:

   - ANGLE: ASTM A36
   - PIPE/TUBE: ASTM A500-50
   - PLATE: ASTM A36 (SELF SUPPORTING AND GUYED TOWERS)
   - PLATE: ASTM A572-65 (MONOPOLE)
   - ANCHOR BOLTS (ANCHOR RODS) A615 GR 75.
   - REINFORCING PLATES A572 GR 50.

3. ALL CONNECTIONS NOT FULLY DETAILED ON THESE PLANS SHALL BE DETAILED BY THE FABRICATOR IN ACCORDANCE WITH AISC SPECIFICATION FOR MANUAL OF STEEL CONSTRUCTION, LOAD AND RESISTANCE FACTOR DESIGN, 14th EDITION.
4. HOLES SHALL NOT BE FLAME CUT THRU STEEL UNLESS APPROVED BY THE ENGINEER.
5. HOT-DIP GALVANIZE ALL ITEMS UNLESS OTHERWISE NOTED, AFTER FABRICATION WHERE PRACTICABLE. GALVANIZING: ASTM A123, ASTM, A153/A153M OR ASTM A653, G90, AS APPLICABLE.
6. REPAIR DAMAGED SURFACES WITH GALVANIZING METHOD AND PAINT CONFORMING TO ASTM A780 OR BY APPLICATION OF STICK OR THICK PASTED MATERIAL SPECIFICALLY DESIGNED FOR REPAIR OF GALVANIZING. CLEAN AREAS TO BE REPAIRED AND REMOVE SLAG FROM WELDS. HEAT SURFACES TO WHICH STICK OR PASTE MATERIAL IS APPLIED, WITH A TORCH TO A TEMPERATURE SUFFICIENT TO MELT THE METALLIC IN STICK OR PASTED; SPREAD MOLTEN MATERIAL UNIFORMLY OVER SURFACES TO BE COATED AND WIPE OFF EXCESS MATERIAL.
7. A NUT LOCKING DEVICE SHALL BE INSTALLED ON ALL PROPOSED AND / OR REPLACED BOLTS.
8. ALL PROPOSED AND / OR REPLACED BOLTS SHALL BE OF SUFFICIENT LENGTH TO EXCLUDE THE THREADS FROM THE SHEAR PLANE.
9. ALL PROPOSED AND / OR REPLACED BOLTS SHALL BE OF SUFFICIENT LENGTH SUCH THAT THE END OF THE BOLT BE AT LEAST FLUSH WITH THE FACE OF THE NUT. IT IS NOT PERMITTED FOR THE BOLT END TO BE BELOW THE FACE OF THE NUT AFTER TIGHTENING IS COMPLETED.
10. GALVANIZED ASTM A325 BOLTS SHALL NOT BE RE-USED.

FIBERGLASS REINFORCED PLASTIC (FRP) SHAPES:

1. ALL FRP SHAPES AND PLATE SHALL CONFORM TO STRONGWELL EXTREN 500/525 SERIES.
2. APPLY RESIN ADHESIVE TO ALL FRP MATING SURFACES PRIOR TO BOLTING.
3. STRONGWELL FIBREBOLTS AND NUTS OR EQUAL.
4. ALL CUT EDGES AND HOLES SHALL BE SEALED WITH A RESIN COMPATIBLE WITH THE RESIN MATRIX USED IN THE STRUCTURAL SHAPE.
5. THE FABRICATOR AND CONTRACTOR SHALL EXERCISE PRECAUTIONS NECESSARY TO PROTECT THE FIBERGLASS PULTRUDED STRUCTURAL SHAPES FROM ABUSE TO PREVENT BREAKAGE, NICKS, GOUGES, ETC. DURING FABRICATION, HANDLING, AND INSTALLATION.
6. STRUCTURAL SHAPES SHALL BE FABRICATED AND ASSEMBLED AS INDICATED ON THE DESIGN DRAWINGS.
7. FIBREBOLTS BOLTS AND NUTS SHALL BE TIGHTENED TO AND LOCKED WITH EPOXY AS FOLLOWS:

$\frac{1}{2}$" DIAMETER NUTS	8 FT-LBS TORQUE
$\frac{5}{8}$" DIAMETER NUTS	16 FT-LBS TORQUE
$\frac{3}{4}$" DIAMETER NUTS	24 FT-LBS TORQUE

FIBERGLASS PANEL NOTES:

FABRICATE PANELS TO FIT PER DIMENSIONS SHOWN IN PLAN.
PANELS TO BE MINIMUM 1/4" THICKNESS.

1. PANELS ARE TO BE FABRICATED IN A CONTIGUOUS LAYUP PER PLANS USING RF TRANSPARENT MATERIALS.
2. ARCHITECT SHALL SPECIFY ANY REQUIRED FINISHES OR TREATMENTS TO ACHIEVE DESIRED APPEARANCE.
3. FABRICATOR SHALL USE A GLASS-RESIN RATIO OF 35% $\pm$ 3%: REINFORCEMENT BY WEIGHT.
4. EACH SKIN SHALL BE FABRICATED WITH GENERAL PURPOSE RESIN OR POLYESTER VINYL RESIN WHERE REQUIRED FOR FIRE TREATMENT, CHOPPED STRAND MAT.
5 CORNER FLANGES MAY BE FASTENED WITH $\frac{5}{8}$"Ø NON-METALLIC THREADED ROD AND NUTS: STRONGWELL FIBREBOLT STUDS AND NUTS OR EQUIVALENT. A TORQUE WRENCH MUST BE USED TO TIGHTEN FASTENERS TO A MAXIMUM 16 FT-LBS.
6. FRP PANELS AND SHAPES SHALL BE COATED WITH A FLAT GEL-COAT FINISH TO PROVIDE ULTRAVIOLET PROTECTION.
7. ALL CUT AND DRILLED EDGES SHALL BE COATED WITH RESIN.
8. FABRICATOR AND INSTALLER SHALL TEST FIT ALL PANELS PRIOR TO FINAL ASSEMBLY/INSTALLATION TO ASSURE SQUARENESS AND CORNER FITS.

GENERAL NOTES

1. ALL REFERENCE TO THE OWNER IN THESE DOCUMENTS SHALL BE CONSIDERED DISH WIRELESS OR ITS DESIGNATED REPRESENTATIVE.
2. ALL WORK PRESENTED ON THESE DRAWINGS MUST BE COMPLETED BY THE CONTRACTOR UNLESS NOTED OTHERWISE. THE CONTRACTOR MUST HAVE CONSIDERABLE EXPERIENCE IN PERFORMANCE OF WORK SIMILAR TO THAT DESCRIBED HEREIN. BY ACCEPTANCE OF THIS ASSIGNMENT, THE CONTRACTOR IS ATTESTING THAT HE DOES HAVE SUFFICIENT EXPERIENCE AND ABILITY, THAT HE IS KNOWLEDGEABLE OF THE WORK TO BE PERFORMED AND THAT HE IS PROPERLY LICENSED AND REGISTERED TO DO THIS WORK IN THE STATE OF ARIZONA.
3. WORK SHALL BE COMPLETED IN ACCORDANCE WITH THE INTERNATIONAL BUILDING CODE, 2009 EDITION.
4. UNLESS SHOWN OR NOTED OTHERWISE ON THE CONTRACT DRAWINGS, OR IN THE SPECIFICATIONS, THE FOLLOWING NOTES SHALL APPLY TO THE MATERIALS LISTED HEREIN, AND TO THE PROCEDURES TO BE USED ON THIS PROJECT.
5. ALL HARDWARE ASSEMBLY MANUFACTURE'S INSTRUCTIONS SHALL BE FOLLOWED EXACTLY AND SHALL SUPERSEDE ANY CONFLICTING NOTES ENCLOSED HEREIN.
6. IT IS THE CONTRACTOR'S RESPONSIBLY TO DETERMINE ERECTION PROCEDURE AND SEQUENCE TO INSURE THE SAFETY OF THE STRUCTURE AND IT'S COMPONENT PARTS DURING ERECTION AND / OR FIELD MODIFICATIONS. THIS INCLUDES, BUT IS NOT LIMITED TO, THE ADDITION OF TEMPORARY BRACING, GUYS OR TIE DOWNS THAT MAY BE NECESSARY. SUCH MATERIAL SHALL BE REMOVED AND SHALL REMAIN THE PROPERTY OF THE CONTRACTOR AFTER THE COMPLETION OF THE PROJECT.
7. ALL DIMENSIONS, ELEVATIONS, AND EXISTING CONDITIONS SHOWN ON THE DRAWINGS SHALL BE FIELD VERIFIED BY THE CONTRACTOR PRIOR TO BEGINNING ANY MATERIALS ORDERING, FABRICATION OR CONSTRUCTION WORK ON THIS PROJECT. CONTRACTOR SHALL NOT SCALE CONTRACT DRAWINGS IN LIEU OF FIELD VERIFICATIONS. ANY DISCREPANCIES SHALL BE IMMEDIATELY BROUGHT TO THE ATTENTION OF THE OWNER AND THE OWNER'S ENGINEER. THE DISCREPANCIES MUST BE RESOLVED BEFORE THE CONTRACTOR IS TO PROCEED WITH THE WORK. THE CONTRACTOR DOCUMENTS DO NOT INDICATE THE METHOD OF CONSTRUCTION. THE CONTRACTOR SHALL SUPERVISE AND DIRECT THE WORK AND SHALL BE SOLELY RESPONSIBLE FOR ALL CONSTRUCTION MEANS, METHODS, TECHNIQUES, SEQUENCES, AND PROCEDURES. OBSERVATION VISITS TO THE SITE BY THE OWNER AND / OR ENGINEER SHALL NOT INCLUDE INSPECTION OF THE PROTECTIVE MEASURES OR PROCEDURES.
8. ALL MATERIALS AND EQUIPMENT FURNISHED SHALL BE NEW AND OF GOOD QUALITY, FREE FROM FAULTS AND DEFECTS AND IN CONFORMANCE WITH THE CONTRACT DOCUMENTS. ANY AND ALL SUBSTITUTIONS MUST BE PROPERLY APPROVED AND AUTHORIZED IN WRITING BY THE OWNER AND ENGINEER PRIOR TO INSTALLATION. THE CONTRACTOR SHALL FURNISH SATISFACTORY EVIDENCE AS TO THE KIND AND QUALITY OF THE MATERIALS AND EQUIPMENT BEING SUBSTITUTED.
9. THE CONTRACTOR SHALL BE RESPONSIBLE FOR INITIATING, MAINTAINING AND SUPERVISING ALL SAFETY PRECAUTIONS AND PROGRAMS IN CONNECTION WITH THE WORK. THE CONTRACTOR IS RESPONSIBLE FOR ENSURING THAT THIS PROJECT AND RELATED WORK COMPLIES WITH ALL APPLICABLE LOCAL, STATE AND FEDERAL SAFETY CODES AND REGULATIONS GOVERNING THIS WORK.
10. ACCESS TO THE PROPOSED WORK SITE MAY BE RESTRICTED. THE CONTRACTOR SHALL COORDINATE INTEND CONSTRUCTION ACTIVITY, INCLUDING WORK SCHEDULE AND MATERIAL ACCESS, WITH THE RESIDENT LEASING AGENT FOR APPROVAL.
11. ALL PERMITS THAT MUST BE OBTAINED ARE THE RESPONSIBILITY OF THE CONTRACTOR. THE CONTRACTOR WILL BE RESPONSIBLE FOR ABIDING BY ALL CONDITIONS AND REQUIREMENTS OF THE PERMITS.
12. IF APPLICABLE, ALL CONCRETE WORK SHALL COMPLY TO LOCAL CODES AND THE ACI 318-05, " BUILDING REQUIREMENTS FOR STRUCTURAL CONCRETE".
13. 24 HOURS PRIOR TO THE BEGINNING OF ANY CONSTRUCTION, THE CONTRACTOR MUST NOTIFY THE APPLICABLE JURISDICTIONAL (STATE, COUNTY OR CITY) ENGINEER.
14. ALL TOWER DIMENSIONS SHALL BE VERIFIED WITH THE PLANS (LATEST REVISION) PRIOR TO COMMENCING CONSTRUCTION. NOTIFY THE ENGINEER IMMEDIATELY IF ANY DISCREPANCIES ARE DISCOVERED. THE OWNER SHALL HAVE A SET OF APPROVED PLANS AVAILABLE AT THE SITE AT ALL TIMES WHILE WORK IS BEING PERFORMED. A DESIGNATED RESPONSIBLE EMPLOYEE SHALL BE AVAILABLE FOR CONTACT BY GOVERNING AGENCY INSPECTORS.

CONNECTIONS

PROCEDURE FOR MAKING STRUCTURAL EPOXY JOINTS

ADHESIVES

1) SHOP FABRICATION - FIBERGLASS RESIN PER MANUFACTURE SPECIFICATIONS & RECOMMENDATIONS

2) FIELD ASSEMBLY - 3M 540 PER MANUFACTURE SPECIFICATIONS & RECOMMENDATIONS

SURFACE PREPARATION

1) SAND MATING SURFACES WITH 80 GRIT SANDPAPER UNTIL THE SURFACE GLOSS HAS BEEN REMOVED. THE SURFACING VEIL MUST BE GROUND OFF TO EXPOSE THE GLASS REINFORCEMENT. SAND BLASTING EQUIPMENT CAN ALSO BE USED.

2) REMOVE ALL DUST WITH A CLEAN CLOTH; AIR BLASTING EQUIPMENT MAY ALSO BE USED. AVOID RECONTAMINATION OF THE SURFACE FROM HANDLING. MIXING OF EPOXY MIX EQUAL VOLUME PORTIONS OF THE BASE AND HARDENER IN A SMALL WAX COATED PAPER CUP WITH A CLEAN STICK UNTIL A UNIFORM GRAY COLOR IS ATTAINED AND ALL MARBLED APPEARANCE IS GONE.

NOTE: OTHER ADHESIVE SYSTEMS COMPATIBLE WITH FIBERGLASS CAN BE UTILIZED AND THE MANUFACTURER'S MIXING INSTRUCTIONS FOR THESE SYSTEMS SHOULD BE FOLLOWED.

APPLICATION AND CURE

1) APPLY THE MIXED EPOXY UNIFORMLY TO ALL SURFACES TO BE JOINED. A THIN APPLICATION IS OFTEN MORE BENEFICIAL THAN A THICK APPLICATION.

2) AVOID INTRODUCING MOISTURE INTO THE JOINT.

3) JOIN THE SURFACES TO BE BONDED. THE POT LIFE AT 77°F FOR A 3 OZ. MIXTURE OF EQUAL VOLUMES OF BASE AND HARDENER IS 2.5 HOURS.

4) SECURE THE JOINT WITH CLAMPS (OR RIVETS OR BOLTS) AND ALLOW 24 HOURS FOR A FULL CURE. THE ASSEMBLY CAN OFTEN BE HANDLED WITH REASONABLE CARE IN LESS THAN 8 HOURS. THE STRUCTURE SHOULD NOT BE REQUIRED TO SUPPORT ITS DESIGN LOAD UNTIL AT LEAST 48 HOURS (AT 70°F) AFTER BONDING. LOWER TEMPERATURES REQUIRE A LONGER CURE.

5) AFTER SECURING THE JOINT, WIPE AWAY EXCESS EPOXY.

WELDING NOTES

1. CONTRACTOR IS RESPONSIBLE FOR COMMISSIONING A CERTIFIED WELD INSPECTOR (CWI) THROUGHOUT THE ENTIRETY OF THE PROJECT. A PASSING CWI REPORT SHALL BE PROVIDED TO THE ENGINEER UPON COMPLETION OF THE PROJECT.
2. WELDING CERTIFICATES MUST BE PROVIDED TO CWI AND ISE PRIOR TO WELDING CONTRACTOR BEGINNING WORK ON SITE. CERTIFICATE WILL BE ASKED FOR AS PART OF INSPECTION PROCESS. ALL WELDING SHOULD BE PERFORMED BY AN AWS QUALIFIED WELDER WHO HAS EXPERIENCE WITH GALVANIZED SURFACES AND IN ACCORDANCE WITH ANSI/AWS D1.1 ND ANSI Z 49.1 OR LATEST EDITIONS.
3. OXY FUEL GAS WELDING OR BRAZING IS STRICTLY PROHIBITED. SPECIFICALLY, NO TORCH CUTTING IS PERMITTED ON SITE. ALL HOLES SHALL BE CUT WITH A GRINDER.
4. INSTALL 3000' (NFPA 701) FIRE BLANKET AROUND ALL COAX.
5. MORE SPLATTER AND SPARKS SHALL BE ANTICIPATED GIVEN THE PREVIOUSLY GALVANIZED SURFACE.
6. COAX IS FLAMMABLE AND CAN CATCH FIRE IF PROPER PRECAUTIONS ARE NOT MADE TO SHIELD COAX FROM ALL WELDING PROCEDURES. ALL COAX SHALL BE SHIELDED AT AND BELOW EACH WELDING PROCEDURE AND ELEVATION. IN ADDITION, COAX SHALL BE PUSHED AWAY FROM TOWER FACE WHERE WELDING IS BEING PERFORMED.
7. CONTRACTOR SHALL EXERCISE CAUTION WHEN WELDING ON A GALVANIZED SURFACE. IF THE WELD MATERIAL IS CONTAMINATED WITH ZINC IT DOES NOT PROVIDE A STRUCTURAL WELD.
8. FUMED CREATED FROM WELDING ON A PREVIOUSLY GALVANIZED SURFACE CAN BE HAZARDOUS.
9. PRIOR TO WELDING, ALL SURFACES SHALL BE PROPERLY GROUND TO REMOVE GALVANIZING.
10. ALL FIELD WELDS SHALL BE TOUCHED UP WITH A GALVANIZING PAINT REPAIR (ZRC OR APPROVED EQUIVALENT)
11. WATER SHALL BE ON SITE OF ADEQUATE AMOUNT, AND AVAILABLE AT SHORT NOTICE AT ALL TIMES DURING WELDING ACTIVITY. A MINIMUM OF 500 GAL. OF WATER SHALL BE PROVIDED. WATER SHALL BE CAPABLE OF REACHING HEIGHT WHERE WELDING IS BEING PERFORMED. IN ADDITION, A MINIMUM OF SIX (6) 10 LB. CLASS ABC MULTIPURPOSE FIRE EXTINGUISHERS FULLY CHARGED AND CAPABLE OF DISCHARGE WITHIN 30 SECONDS OF DETECTING A FIRE SHALL BE PROVIDED. FIRE EXTINGUISHERS SHALL BE STRATEGICALLY LOCATED AROUND COMPOUND AND IN THE AIR (I.E. IN THE MAN LIFT WHERE WELDING IS BEING PERFORMED).
12. CLEAN OUT ALL DEBRIS THROUGHOUT MONOPOLE AND MONOPOLE BASE PRIOR TO WELDING.

BOLT TIGHTENING PROCEDURE

1. TIGHTEN CONNECTION BOLTS BY AISC - "TURN OF THE NUT" METHOD, USING THE CHART BELOW.

   BOLT LENGTH UP TO AND INCLUDING FOUR DIA.

$\frac{1}{2}$"	BOLTS UP TO AND INCLUDING 2.0 INCH LENGTH	+1/3 TURN BEYOND SNUG TIGHT
$\frac{5}{8}$"	BOLTS UP TO AND INCLUDING 2.5 INCH LENGTH	+1/3 TURN BEYOND SNUG TIGHT
$\frac{3}{4}$"	BOLTS UP TO AND INCLUDING 3.0 INCH LENGTH	+1/3 TURN BEYOND SNUG TIGHT
$\frac{7}{8}$"	BOLTS UP TO AND INCLUDING 3.5 INCH LENGTH	+1/3 TURN BEYOND SNUG TIGHT
1"	BOLTS UP TO AND INCLUDING 4.0 INCH LENGTH	+1/3 TURN BEYOND SNUG TIGHT

   BOLT LENGTH OVER FOUR DIA. BUT NOT EXCEEDING EIGHT DIA.

$\frac{1}{2}$"	BOLTS 2.25 TO 4.0 INCH LENGTH	+1/2 TURN BEYOND SNUG TIGHT
$\frac{5}{8}$"	BOLTS 2.75 TO 5.0 INCH LENGTH	+1/2 TURN BEYOND SNUG TIGHT
$\frac{3}{4}$"	BOLTS 3.25 TO 6.0 INCH LENGTH	+1/2 TURN BEYOND SNUG TIGHT
$\frac{7}{8}$"	BOLTS 3.75 TO 7.0 INCH LENGTH	+1/2 TURN BEYOND SNUG TIGHT
1"	BOLTS 4.25 TO 8.0 INCH LENGTH	+1/2 TURN BEYOND SNUG TIGHT

2. CONNECTION BOLTS SUBJECT TO DIRECT TENSION SHALL BE INSTALLED AND TIGHTENED AS PER SECTION 8.2.1 OF THE AISC SPECIFICATION FOR STRUCTURAL JOINTS USING A325 OR A490 BOLTS, LOCATED IN THE AISC MANUAL OF STEEL CONSTRUCTION. THE INSTALLATION PROCEDURE IS PARAPHRASED AS FOLLOWS:
3. FASTENERS SHALL BE INSTALLED IN PROPERLY ALIGNED HOLES AND TIGHTENED BY ON OF THE METHODS DESCRIBED IN SUBSECTION 8.2.1 THROUGH 8.2.4

   8.2.1 TURN-OF-THE-NUT TIGHTENING

   BOLTS SHALL BE INSTALLED IN ALL HOLES OF THE CONNECTION AND BROUGHT TO A SNUG TIGHT CONDITION AS DEFINED IN SECTION 8.1, UNTIL ALL THE BOLTS ARE SIMULTANEOUSLY SNUG TIGHT AND THE CONNECTION IS FULLY COMPACTED. FOLLOWING THIS INITIAL OPERATION ALL BOLTS IN THE CONNECTION SHALL TIGHTENED FURTHER BY THE APPLICABLE AMOUNT OF ROTATION SPECIFIED ABOVE. DURING THE TIGHTENING OPERATION THERE SHALL BE NO ROTATION OF THE PART NOT TURNED BY THE WRENCH. TIGHTENING SHALL PROGRESS SYSTEMATICALLY FROM THE MOST RIGID PART OF THE JOINT IN A MANNER THAT WILL MINIMIZE RELAXATION OF PREVIOUSLY PRETENSIONED BOLTS.
4. ALL OTHER BOLTED CONNECTIONS SHALL BE BROUGHT TO A SNUG TIGHT CONDITION AS DEFINED IN SECTION 8.1 OF THE SPECIFICATION.

T-Mobile

1330 W. SOUTHERN AVE. STE A-102
TEMPE, AZ 85282
PHONE: (480) 638-2600 FAX: (480) 638-2852

PINNACLE CONSULTING, INC
Construction - Project Management - Site Development
1426 N. MARVIN STREET #101
GILBERT, AZ 85233

ISE Incorporated
Structural Engineers
P.O. BOX 50039
Phoenix, Arizona 85076
PHONE: 602-403-8614
www.ise-inc.biz

ISE JOB #: 18375

T-MOBILE PH50434A

SITE NAME: SPRINT PH54XC026 GHOST TOWN WINDMILL

PROJECT NOTES

4650 N MAMMOTH MINE RD, APACHE JUNCTION, AZ 85119 (PINAL COUNTY)
Latitude: 33.457908333° N Longitude: -111.4915972 0° W

Registered Professional Engineer (Structural)
CERTIFICATE NO. 52229
Glen L. Hurst III
May 9, 2023
Date Signed
ARIZONA, U.S.A.
Expires 6/30/2023

PROGRESS LOG

1	05/09/23	FRP MOUNT REVISION	CK
0	04/10/23	ISSUED TO CLIENT	CK
B	04/08/23	12.5' DIA TANK CHANGE	CK
A	04/06/23	ISSUED FOR REVIEW	CK

SHEET NUMBER	PROGRESS
GSN2.0	1

DRAWING DATE
May 09, 2023

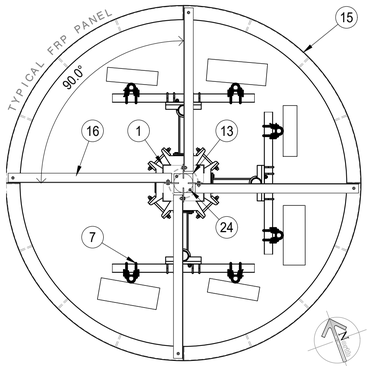

8 TOWER TOP VIEW — SCALE: 3/8"=1'-0"

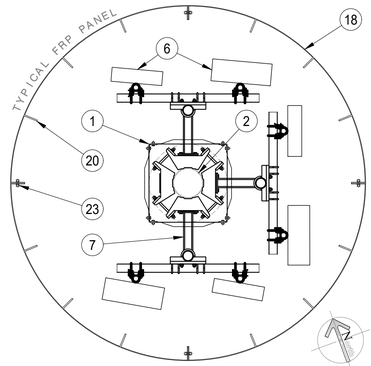

7 FRP SECTION AT ANTENNAS — SCALE: 3/8"=1'-0"

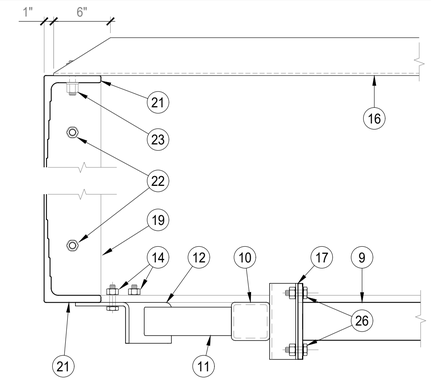

6 DETAIL — SCALE: 1 1/2"=1'-0"

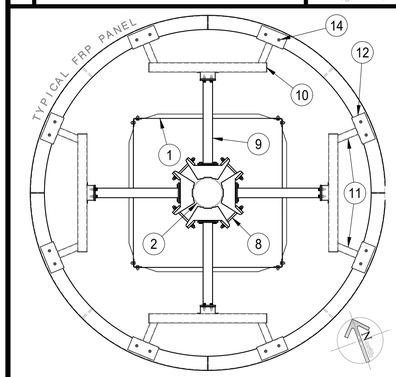

5 FRP TANK BOTTOM VIEW — SCALE: 3/8"=1'-0"

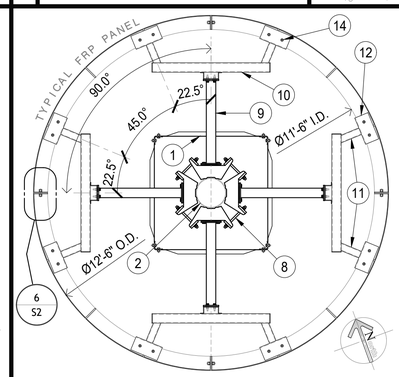

4 FRP TANK BOTTOM FLANGE — SCALE: 3/8"=1'-0"

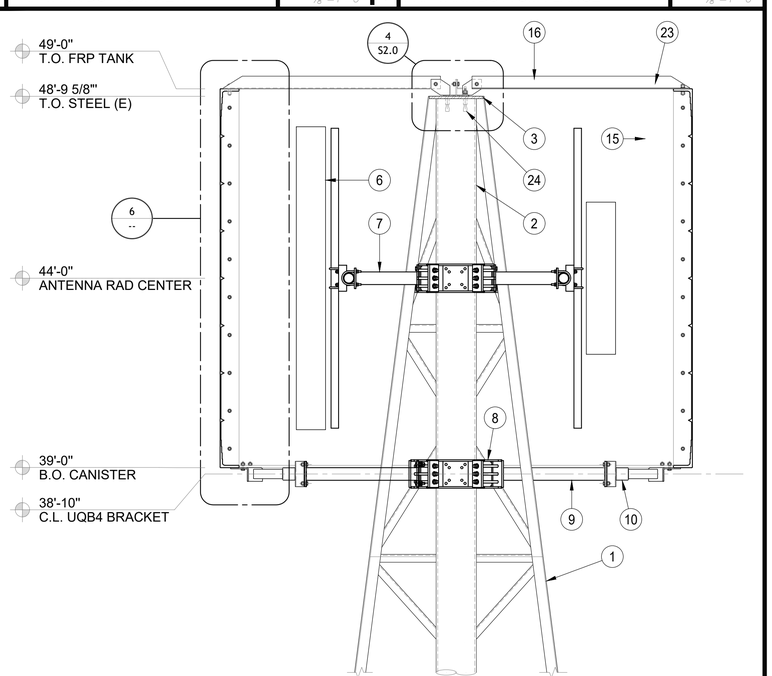

3 FRP TANK SECTION — SCALE: 3/4"=1'-0"

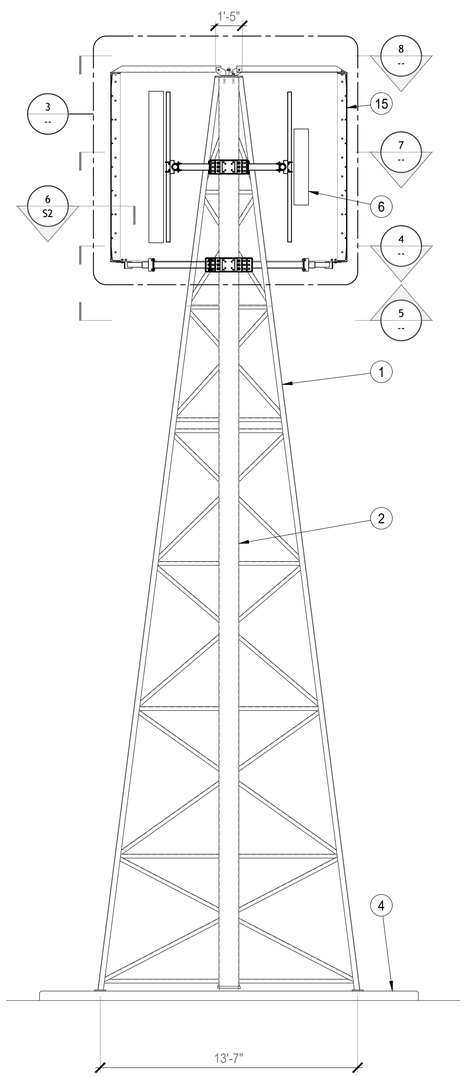

2 TOWER SECTION — SCALE: 1/4"=1'-0"

NOTE: DETAILED TOWER ELEVATIONS AND MEMBER PLACEMENT FROM TOWER DESIGN CALCULATIONS ON FILE BY STARBRIDGE DATED 3/17/2003

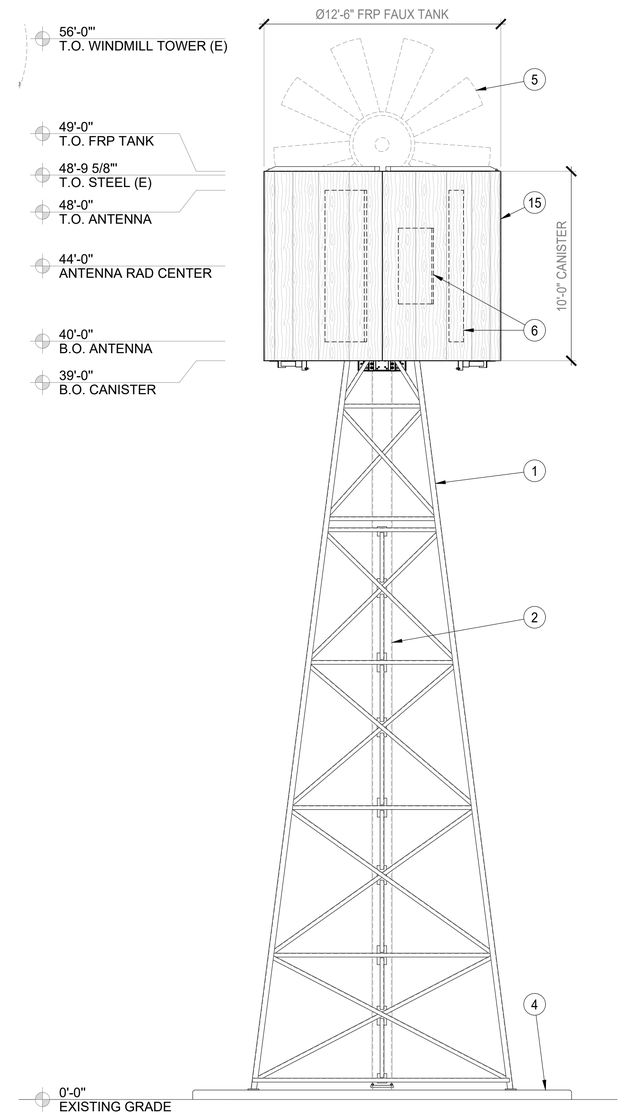

1 TOWER ELEVATION — SCALE: 1/4"=1'-0"

KEY NOTES

MARK	DESCRIPTION
1	(E) STEEL TOWER FRAMING
2	(E) 12.75" O.D. CENTER PIPE
3	(E) $\frac{3}{4}$" THICK CAP PLATE
4	(E) CONCRETE SLAB BASE
5	(E) WINDMILL FAN AND MECHANICAL TO BE REMOVED
6	ANTENNA BY OTHERS
7	ANTENNA MOUNT BY OTHER
8	SITEPRO1 UQB4 UNIVERSAL RING MOUNT
9	SITEPRO1 MM03 36" STAND OFF
10	HSS 4x4x$\frac{1}{4}$"
11	HSS 3x3x$\frac{1}{4}$"
12	$\frac{3}{8}$" A36 BENT PLATE
13	$\frac{3}{8}$" A36 PLATE
14	Ø$\frac{5}{8}$" A307 BOLT IN Ø$\frac{11}{16}$" HOLES
15	FRP (4) SECTION TANK
16	FRP ∠4x4x$\frac{1}{4}$" TANK BRACE
17	$\frac{1}{4}$" BENT PLATE
18	FRP $\frac{1}{4}$" SKIN WOOD PLANK FINISH PER OWNER/ARCHITECTURAL
19	FRP $\frac{3}{8}$" FLANGE
20	FRP $\frac{1}{2}$" FLANGE
21	FRP $\frac{3}{4}$" FLANGE
22	NOT USED
23	Ø$\frac{5}{8}$" FIBREBOLT
24	LINDAPTER LLB016 (Ø$\frac{5}{8}$") IN Ø$\frac{11}{16}$" HOLE
25	$\frac{3}{8}$" A36 PLATE TAB
26	Ø$\frac{1}{2}$" A325 BOLT IN Ø$\frac{9}{16}$" HOLES
27	Ø$\frac{9}{16}$" HOLE
28	Ø$\frac{11}{16}$" HOLE
29	FIELD DRILL EXISTING CAP PLATE
30	V-RIB STIFFENER EQUAL SPACED AS SHOWN
31	TAPER LAYUP FROM $\frac{1}{4}$" SKIN TO $\frac{3}{4}$" FLANGE
32	FIELD DRILL
33	$\frac{1}{4}$" PLATE CAP
34	
35	
36	
37	
38	
39	
40	
41	
42	
43	
44	
45	

T Mobile
1330 W. SOUTHERN AVE. STE A-102
TEMPE, AZ 85282
PHONE: (480) 638-2600 FAX: (480) 638-2852

PINNACLE CONSULTING, INC
Construction - Project Management - Site Development
1426 N. MARVIN STREET #101
GILBERT, AZ 85233

ISE Incorporated
Structural Engineers
P.O. BOX 50039
Phoenix, Arizona 85076
PHONE: 602-403-8614
www.ise-inc.biz

ISE JOB #: 18375

T-MOBILE PH50434A

SITE NAME: SPRINT PH54XC026 GHOST TOWN WINDMILL

TOWER / SCREEN SECTIONS & ELEVATION

4650 N MAMMOTH MINE RD, APACHE JUNCTION, AZ 85119 (PINAL COUNTY)
Latitude: 33.457908333° N Longitude: -111.4915972O° W

Registered Professional Engineer (Civil) CERTIFICATE NO. 52229 Glen L. Hunt III Date Signed 3 May 9 2023 ARIZONA, U.S.A. Expires 6/30/2023

PROGRESS LOG

1	05/09/23	FRP MOUNT REVISION	CK
0	04/10/23	ISSUED TO CLIENT	CK
B	04/08/23	12.5' DIA TANK CHANGE	CK
A	04/06/23	ISSUED FOR REVIEW	CK

SHEET NUMBER: S1.0

PROGRESS: 1

DRAWING DATE: May 09, 2023

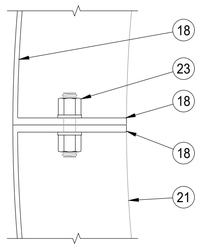

9 NOT USED

6 TYPICAL PANEL JOINT

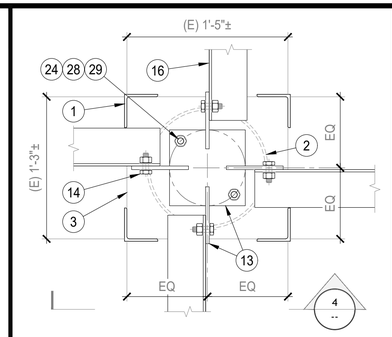

5 DETAIL

SCALE: $1\frac{1}{2}$"=1'-0"

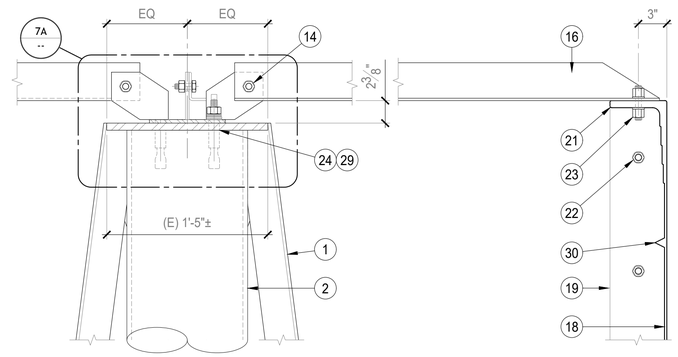

8 NOT USED

4 FRP TANK TOP BRACE

SCALE: $1\frac{1}{2}$"=1'-0"

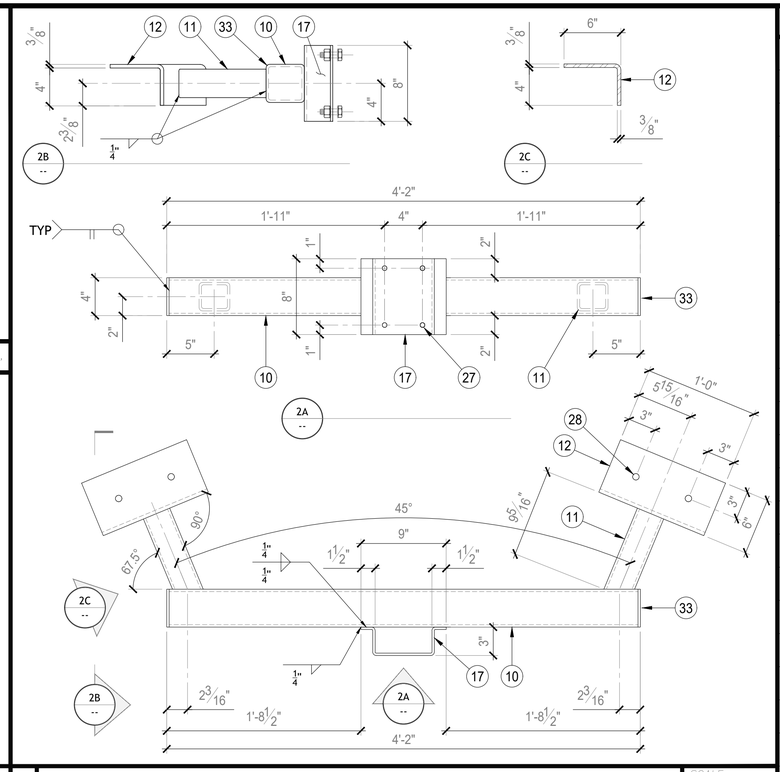

2 FRP TANK SUPPORT WELDMENT (4 REQUIRED)

SCALE: $1\frac{1}{2}$"=1'-0"

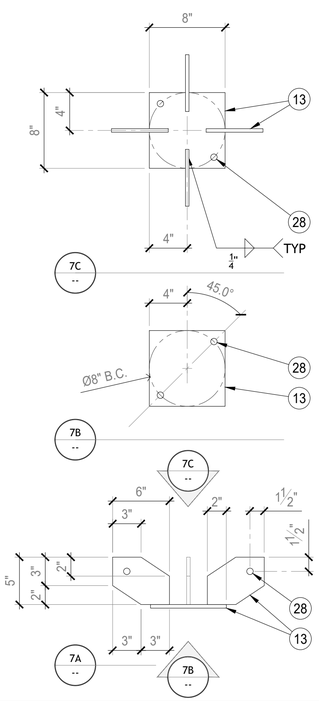

7 CANISTER MATING PLATE

SCALE: 1"=1'-0"

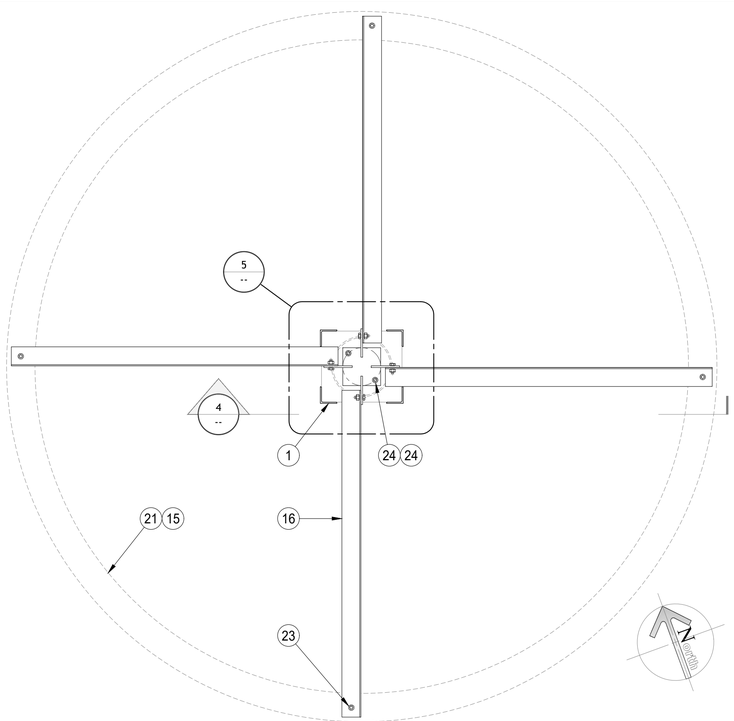

3 FRP TANK TOP BRACE

SCALE: 1"=1'-0"

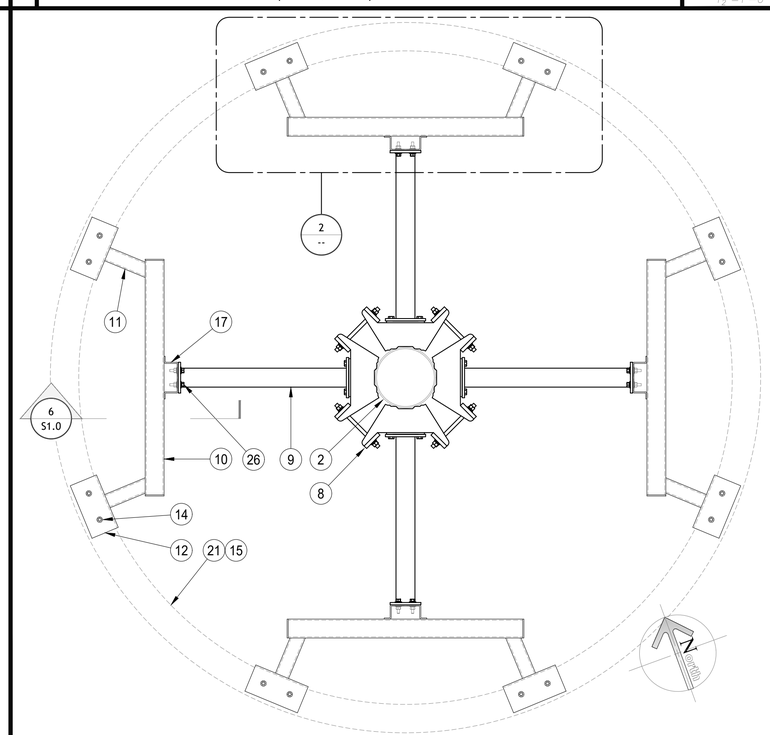

1 FRP TANK SUPPORT FRAMING

SCALE: $\frac{3}{4}$"=1'-0"

KEY NOTES

MARK	DESCRIPTION
1	(E) STEEL TOWER FRAMING
2	(E) 12.75" O.D. CENTER PIPE
3	(E) $\frac{3}{4}$" THICK CAP PLATE
4	(E) CONCRETE SLAB BASE
5	(E) WINDMILL FAN AND MECHANICAL TO BE REMOVED
6	ANTENNA BY OTHERS
7	ANTENNA MOUNT BY OTHER
8	SITEPRO1 UQB4 UNIVERSAL RING MOUNT
9	SITEPRO1 MM03 36" STAND OFF
10	HSS 4x4x$\frac{1}{4}$"
11	HSS 3x3x$\frac{1}{4}$"
12	$\frac{3}{8}$" A36 BENT PLATE
13	$\frac{3}{8}$" A36 PLATE
14	Ø$\frac{5}{8}$" A307 BOLT IN Ø$\frac{11}{16}$" HOLES
15	FRP (4) SECTION TANK
16	FRP ∠4x4x$\frac{1}{4}$" TANK BRACE
17	$\frac{1}{4}$" BENT PLATE
18	FRP $\frac{1}{4}$" SKIN WOOD PLANK FINISH PER OWNER/ARCHITECTURAL
19	FRP $\frac{3}{8}$" FLANGE
20	FRP $\frac{1}{2}$" FLANGE
21	FRP $\frac{3}{4}$" FLANGE
22	NOT USED
23	Ø$\frac{5}{8}$" FIBREBOLT
24	LINDAPTER LLB016 (Ø$\frac{5}{8}$") IN Ø$\frac{11}{16}$" HOLE
25	$\frac{3}{8}$" A36 PLATE TAB
26	Ø$\frac{1}{2}$" A325 BOLT IN Ø$\frac{9}{16}$" HOLES
27	Ø$\frac{9}{16}$" HOLE
28	Ø$\frac{11}{16}$" HOLE
29	FIELD DRILL EXISTING CAP PLATE
30	V-RIB STIFFENER EQUAL SPACED AS SHOWN
31	TAPER LAYUP FROM $\frac{1}{4}$" SKIN TO $\frac{3}{4}$" FLANGE
32	FIELD DRILL
33	$\frac{1}{4}$" PLATE CAP
34	
35	
36	
37	
38	
39	
40	
41	
42	
43	
44	
45	

T Mobile

1330 W. SOUTHERN AVE. STE A-102
TEMPE, AZ 85282
PHONE: (480) 638-2600 FAX: (480) 638-2852

PINNACLE CONSULTING, INC
Construction - Project Management - Site Development
1426 N. MARVIN STREET #101
GILBERT, AZ 85233

ISE Incorporated
Structural Engineers
P.O. BOX 50039
Phoenix, Arizona 85076
PHONE: 602-403-8614
www.ise-inc.biz

ISE JOB #: 18375

T-MOBILE PH50434A

SITE NAME: SPRINT PH54XC026 GHOST TOWN WINDMILL

UPPER AND LOWER FRP MOUNTS

4650 N MAMMOTH MINE RD, APACHE JUNCTION, AZ 85119 (PINAL COUNTY)
Latitude: 33.45790833° N Longitude: -111.49159720° W

Registered Professional Engineer (Civil)
CERTIFICATE NO. 52229
Glen L. Hurd III
May 9, 2023
Date Signed
ARIZONA, U.S.A.
Expires 6/30/2023

PROGRESS LOG

1	05/09/23	FRP MOUNT REVISION	CK
0	04/10/23	ISSUED TO CLIENT	CK
B	04/08/23	12.5' DIA TANK CHANGE	CK
A	04/06/23	ISSUED FOR REVIEW	CK

SHEET NUMBER: S2.0

PROGRESS: 1

DRAWING DATE: May 09, 2023

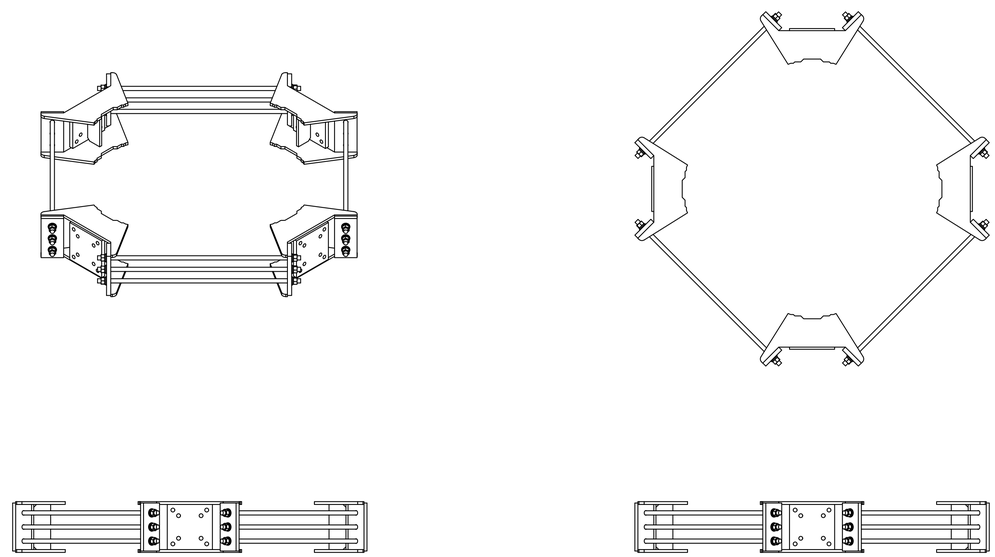

"THIS DRAWING, INCLUDING RELATED PARTS, DESIGNS AND SPECIFICATIONS, IS THE EXCLUSIVE PROPERTY OF VALMONT COMMUNICATIONS AND PROVIDED SOLELY FOR THE PURPOSE OF SPECIFYING AND DEPICTING VALMONT PARTS ON PROPOSAL DRAWINGS, BIDS AND SITE PLANS. ANY OTHER USE OF THESE MATERIALS IS EXPRESSLY PROHIBITED.

THIS ELECTRONIC FILE MAY NOT BE DISTRIBUTED, TRANSMITTED OR STORED IN ANY RETRIEVAL SYSTEM WITHOUT THE EXPRESS WRITTEN CONSENT OF VALMONT COMMUNICATIONS."

QUAD UNIVERSAL
RING MOUNT
12" TO 60"

valmont STRUCTURES

2 SITEPRO1 QUAD UNIVERSAL RING MOUNT UQB4 (1 REQUIRED)

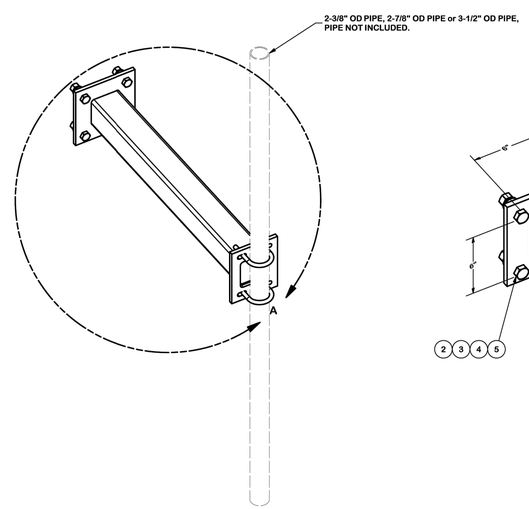

DETAIL A

PARTS LIST

ITEM	QTY	PART NO.	PART DESCRIPTION	LENGTH	UNIT WT.	NET WT.
1	1	X-WWM03	3' STAND-OFF ARM / WALL MOUNT		40.14	40.14
2	4	G58LW	5/8" HDG LOCKWASHER		0.03	0.10
3	4	A58FW	5/8" HDG A325 FLATWASHER		0.03	0.14
4	4	A58NUT	5/8" HDG A325 HEX NUT		0.13	0.52
5	4	A582112	5/8" x 2-1/2" HDG A325 HEX BOLT		0.33	1.34
6	2	X-UB1212	1/2" X 2-1/2" X 4-1/2" X 2" GALV. U-BOLT		0.66	1.31
6	2	X-UB1300	1/2" X 3" X 5" X 2" GALV U-BOLT		0.70	1.39
7	4	G12FW	1/2" HDG USS FLATWASHER		0.03	0.14
8	4	G12NUT	1/2" HDG HEAVY 2H HEX NUT		0.07	0.29
9	4	G12LW	1/2" HDG LOCKWASHER		0.01	0.06
					TOTAL WT. #	24.89

TOLERANCE NOTES

TOLERANCES ON DIMENSIONS, UNLESS OTHERWISE NOTED ARE:
SAWED, SHEARED AND GAS CUT EDGES *(± 0.030")*
DRILLED AND GAS CUT HOLES *(± 0.030")* - NO CONING OF HOLES
LASER CUT EDGES AND HOLES *(± 0.010")* - NO CONING OF HOLES
BENDS ARE ± 1/2 DEGREE
ALL OTHER MACHINING *(± 0.030")*
ALL OTHER ASSEMBLY *(± 0.060")*

PROPRIETARY NOTE:
THE DATA AND TECHNIQUES CONTAINED IN THIS DRAWING ARE PROPRIETARY INFORMATION OF VALMONT INDUSTRIES AND CONSIDERED A TRADE SECRET. ANY USE OR DISCLOSURE WITHOUT THE CONSENT OF VALMONT INDUSTRIES IS STRICTLY PROHIBITED.

DESCRIPTION: 3' STAND-OFF WIRELESS WALL MOUNT, SITE PRO 1

SITE PRO 1 — valmont COMMUNICATIONS
Engineering Support Team: 1-888-753-7446
Locations: New York, NY; Atlanta, GA; Los Angeles, CA; Plymouth, IN; Salem, OR; Dallas, TX

CPD NO.	DRAWN BY	ENG. APPROVAL	PART NO.	PAGE
4714	LMD 12/17/2012		WWM03	1 OF 1
CLASS / SUB: 81 / 01	DRAWING USAGE: CUSTOMER	CHECKED BY: BMC 12/17/2012	DWG. NO. WWM03	

1 SITEPRO1 3' STAND OFF MM03 (4 REQUIRED) - FRP MOUNT

KEY NOTES

MARK	DESCRIPTION
1	(E) STEEL TOWER FRAMING
2	(E) 12.75" O.D. CENTER PIPE
3	(E) $\frac{3}{4}$" THICK CAP PLATE
4	(E) CONCRETE SLAB BASE
5	(E) WINDMILL FAN AND MECHANICAL TO BE REMOVED
6	ANTENNA BY OTHERS
7	ANTENNA MOUNT BY OTHER
8	SITEPRO1 UQB4 UNIVERSAL RING MOUNT
9	SITEPRO1 MM03 36" STAND OFF
10	HSS 4x4x$\frac{1}{4}$"
11	HSS 3x3x$\frac{1}{4}$"
12	$\frac{3}{8}$" A36 BENT PLATE
13	$\frac{3}{8}$" A36 PLATE
14	Ø$\frac{5}{8}$" A307 BOLT IN Ø$\frac{11}{16}$" HOLES
15	FRP (4) SECTION TANK
16	FRP ∠4x4x$\frac{1}{4}$" TANK BRACE
17	$\frac{1}{4}$" BENT PLATE
18	FRP $\frac{1}{4}$" SKIN WOOD PLANK FINISH PER OWNER/ARCHITECTURAL
19	FRP $\frac{3}{8}$" FLANGE
20	FRP $\frac{1}{2}$" FLANGE
21	FRP $\frac{3}{4}$" FLANGE
22	NOT USED
23	Ø$\frac{5}{8}$" FIBREBOLT
24	LINDAPTER LLB016 (Ø$\frac{5}{8}$") IN Ø$\frac{11}{16}$" HOLE
25	$\frac{3}{8}$" A36 PLATE TAB
26	Ø$\frac{1}{2}$" A325 BOLT IN Ø$\frac{9}{16}$" HOLES
27	Ø$\frac{9}{16}$" HOLE
28	Ø$\frac{11}{16}$" HOLE
29	FIELD DRILL EXISTING CAP PLATE
30	V-RIB STIFFENER EQUAL SPACED AS SHOWN
31	TAPER LAYUP FROM $\frac{1}{4}$" SKIN TO $\frac{3}{4}$" FLANGE
32	FIELD DRILL
33	$\frac{1}{4}$" PLATE CAP
34	
35	
36	
37	
38	
39	
40	
41	
42	
43	
44	
45	

T Mobile
1330 W. SOUTHERN AVE. STE A-102
TEMPE, AZ 85282
PHONE: (480) 638-2600 FAX: (480) 638-2852

PINNACLE CONSULTING, INC
Construction - Project Management - Site Development
1426 N. MARVIN STREET #101
GILBERT, AZ 85233

ISE Incorporated
Structural Engineers
P.O. BOX 50039
Phoenix, Arizona 85076
PHONE: 602-403-8614
www.ise-inc.biz

ISE JOB #: 18375

T-MOBILE PH50434A

SITE NAME: SPRINT PH54XC026 GHOST TOWN WINDMILL

SITEPRO1 HARDWARE

4650 N MAMMOTH MINE RD, APACHE JUNCTION, AZ 85119 (PINAL COUNTY)
Latitude: 33.457908333° N Longitude: -111.4915972 0° W

Registered Professional Engineer (Structural)
CERTIFICATE NO. 52229
Glen L. Hunt III
May 9, 2023
Signed
ARIZONA, U.S.A.
Expires 6/30/2023

PROGRESS LOG

1	05/09/23	FRP MOUNT REVISION	CK
0	04/10/23	ISSUED TO CLIENT	CK
B	04/08/23	12.5' DIA TANK CHANGE	CK
A	04/06/23	ISSUED FOR REVIEW	CK

SHEET NUMBER: S3.0
PROGRESS: 1
DRAWING DATE: May 09, 2023

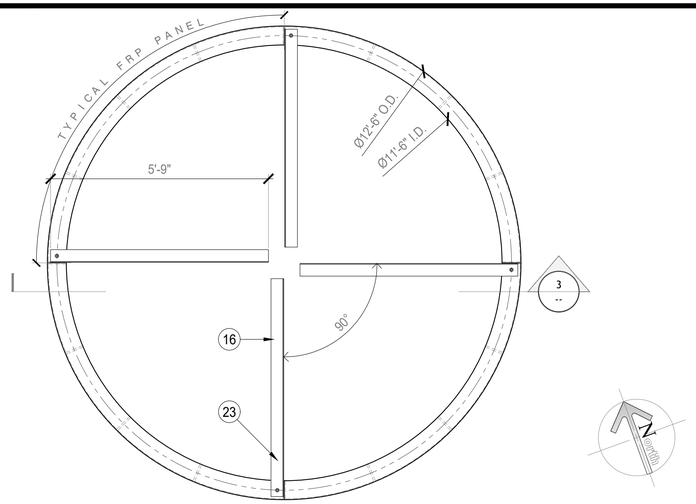

4 FRP TANK PLAN VIEW

SCALE: 1/2"=1'-0"

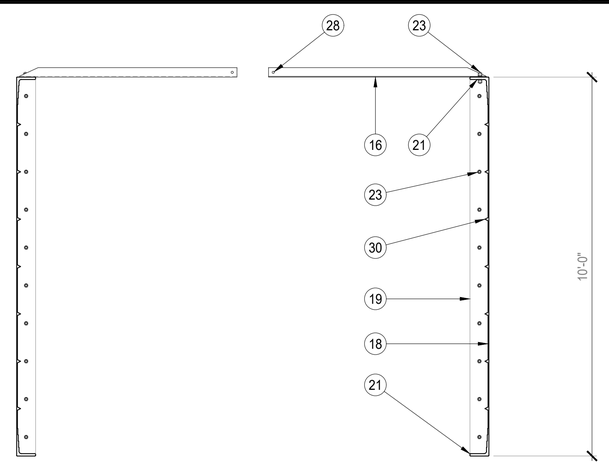

3 FRP TANK SECTION

SCALE: 1/2"=1'-0"

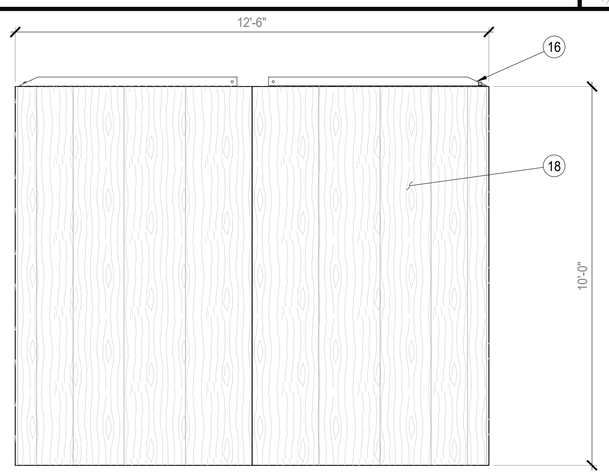

2 FRP TANK ELEVATION

SCALE: 1/2"=1'-0"

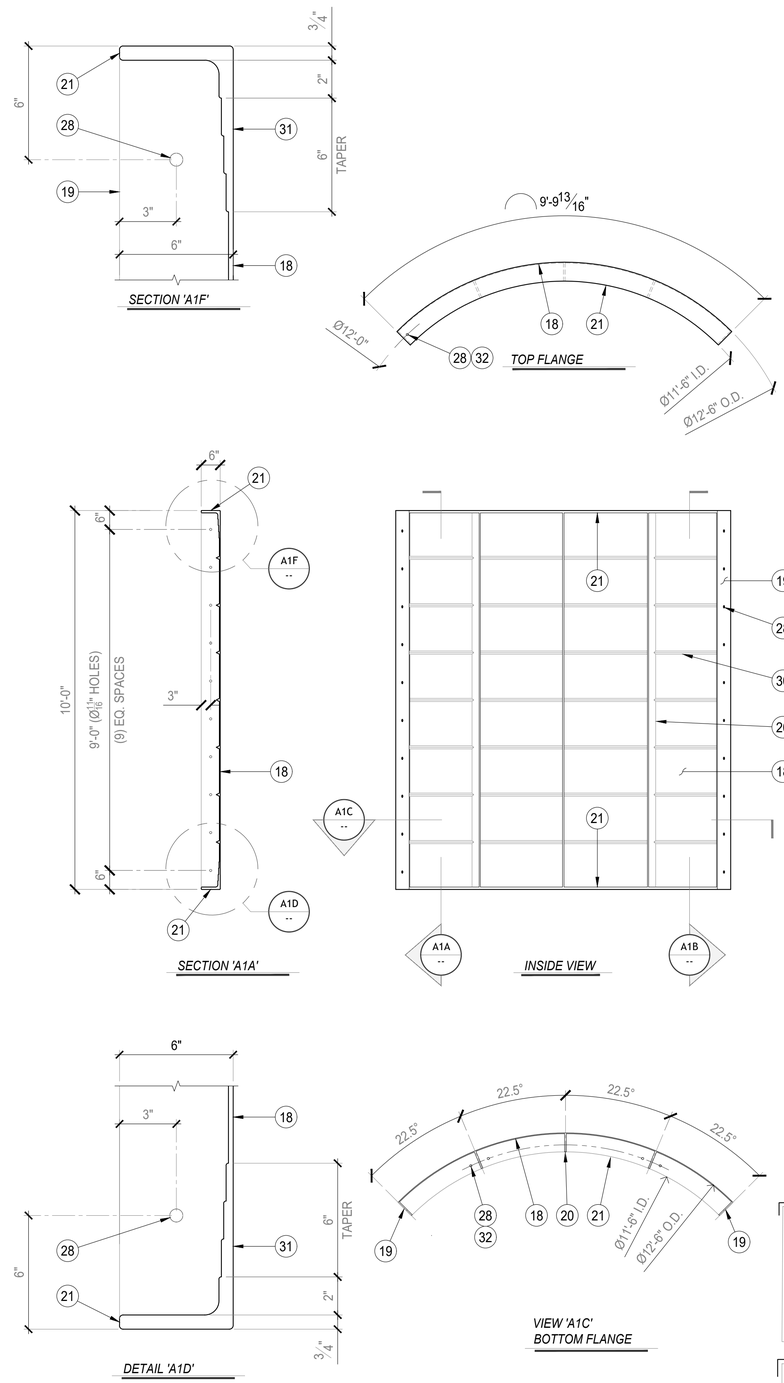

4 THUS

SPECIAL CONSTRUCTION NOTE:
PRIOR TO BOLTING, ALL FRP MATING SURFACES SHALL BE GLUED TOGETHER IN ACCORDANCE WITH STRONGWELL CONNECTION PROCEDURE NOTED ON SHEET GSN.

* SPECIAL NOTE:
DO NOT FABRICATE HOLES IN BOTTOM FLANGE OF PANEL MATING TO PLATFORM FRAMING.

1 FRP TANK PANEL

SCALE: 1"=1'-0"

KEY NOTES

MARK	DESCRIPTION
1	(E) STEEL TOWER FRAMING
2	(E) 12.75" O.D. CENTER PIPE
3	(E) $\frac{3}{4}$" THICK CAP PLATE
4	(E) CONCRETE SLAB BASE
5	(E) WINDMILL FAN AND MECHANICAL TO BE REMOVED
6	ANTENNA BY OTHERS
7	ANTENNA MOUNT BY OTHER
8	SITEPRO1 UQB4 UNIVERSAL RING MOUNT
9	SITEPRO1 MM03 36" STAND OFF
10	HSS 4x4x$\frac{1}{4}$"
11	HSS 3x3x$\frac{1}{4}$"
12	$\frac{3}{8}$" A36 BENT PLATE
13	$\frac{3}{8}$" A36 PLATE
14	Ø$\frac{5}{8}$" A307 BOLT IN Ø$\frac{11}{16}$" HOLES
15	FRP (4) SECTION TANK
16	FRP ∠4x4x$\frac{1}{4}$" TANK BRACE
17	$\frac{1}{4}$" BENT PLATE
18	FRP $\frac{1}{4}$" SKIN WOOD PLANK FINISH PER OWNER/ARCHITECTURAL
19	FRP $\frac{3}{8}$" FLANGE
20	FRP $\frac{1}{2}$" FLANGE
21	FRP $\frac{3}{4}$" FLANGE
22	NOT USED
23	Ø$\frac{5}{8}$" FIBREBOLT
24	LINDAPTER LLB016 (Ø$\frac{5}{8}$") IN Ø$\frac{11}{16}$" HOLE
25	$\frac{3}{8}$" A36 PLATE TAB
26	Ø$\frac{1}{2}$" A325 BOLT IN Ø$\frac{9}{16}$" HOLES
27	Ø$\frac{9}{16}$" HOLE
28	Ø$\frac{11}{16}$" HOLE
29	FIELD DRILL EXISTING CAP PLATE
30	V-RIB STIFFENER EQUAL SPACED AS SHOWN
31	TAPER LAYUP FROM $\frac{1}{4}$" SKIN TO $\frac{3}{4}$" FLANGE
32	FIELD DRILL
33	$\frac{1}{4}$" PLATE CAP
34	
35	
36	
37	
38	
39	
40	
41	
42	
43	
44	
45	

T Mobile
1330 W. SOUTHERN AVE. STE A-102
TEMPE, AZ 85282
PHONE: (480) 638-2600 FAX: (480) 638-2852

PINNACLE CONSULTING, INC
Construction - Project Management - Site Development
1426 N. MARVIN STREET #101
GILBERT, AZ 85233

ISE Incorporated
Structural Engineers
P.O. BOX 50039
Phoenix, Arizona 85076
PHONE: 602-403-8614
www.ise-inc.biz

ISE JOB #: 18375

T-MOBILE PH50434A

SITE NAME: SPRINT PH54XC026 GHOST TOWN WINDMILL

4650 N MAMMOTH MINE RD, APACHE JUNCTION, AZ 85119 (PINAL COUNTY)
Latitude: 33.457790833° N Longitude: -111.491597720° W

FRP DETAILS

Registered Professional Engineer (Structural)
CERTIFICATE NO. 52229
Glen L. Hunt III
May 9, 2023
Signed
ARIZONA, U.S.A.
Expires 6/30/2023

PROGRESS LOG

1	05/09/23	FRP MOUNT REVISION	CK
0	04/10/23	ISSUED TO CLIENT	CK
B	04/08/23	12.5' DIA TANK CHANGE	CK
A	04/06/23	ISSUED FOR REVIEW	CK

SHEET NUMBER: FRP1.0

PROGRESS: 1

DRAWING DATE: May 09, 2023

AFFIDAVIT OF SIGN POSTING

Case Number: SUP-029-23

Project Name: PH50434A Goldfield

Project Location: 4650 North Mammoth Mine Road, Apache Junction, AZ 85119

Date Posted: 12/19/2023

I confirm that the site has been posted as required, for the case noted above. **Photographs of the site posting, and any subsequent changes/updates made to the sign, have also been submitted.**

MARK R. SOKOLOWSKI — 12-19-2023

Signature — Date

This instrument was acknowledged before me this 19th day of August, 2023, by Kimberly Martin

OFFICIAL SEAL
KIMBERLY MARTIN
NOTARY PUBLIC - ARIZONA
MARICOPA COUNTY
COMM # 631139
My Comm. Expires June 30, 2026

Notary Public

My Commission Expires: June 30, 2026

PINAL COUNTY
Public Hearings
Public Hearing Information
Case Number: SUP-029-23
Existing Zoning: CB-2
Acreage: 5.00
Case & SUP Description: Wireless Communication Facility
Applicant Name: Pinnacle Consulting (Scott Hopper)
Applicant Phone Number: (602) 743-9439
Case Information Available at Pinal County Community Development
(520) 866-6442 or www.pinalcountyaz.gov

PINAL COUNTY
Public Hearings

PETERSON MERCANTILE
PINAL COUNTY
Public Hearings
Public Hearing Information
Case Number: SUP-029-23
Existing Zoning: CB-2
Acreage: 5.00
Case & SUP Description: Wireless Communication Facility
Applicant Name: Pinnacle Consulting (Scott Hopper)
Applicant Phone Number: (602) 743-9439
Case Information Available at Pinal County Community Development
(520) 866-6442 or www.pinalcountyaz.gov

STOP
SALOON
PETERSEN MERCANTILE
PINAL COUNTY
Public Hearings
Public Hearing Information
Applicant Name: Pinnacle Consulting (Scott Hopper)
Applicant Phone Number: (602) 743-9439

PROPERTY OWNERSHIP LIST
(Required for filing all applications)

Instructions: Print Name, Address, City, State, Zip Code and Tax Parcel Number for each property owner within 600 feet of the subject parcel boundary. Feel free to attach a separate list if generated digitally. Please see "How to use the Buffer Tool" on our FAQ's page if you are generating the list.

Parcel No.: APN#10002003B
Name: WORST CLAYTON L JR REV LIV...
Address: 5289 E APACHE TRL
City/ST/Zip: APACHE JUNCTION, AZ 85119

Parcel No.:
Name:
Address:
City/ST/Zip:

Parcel No.: APN 100020540
Name: GOLDFIELD GHOST TOWN & MI...
Address: 919 E LOCKWOOD ST
City/ST/Zip: MESA, AZ 85203

Parcel No.:
Name:
Address:
City/ST/Zip:

Parcel No.: APN 10002033B
Name: MAMMOTH HEIGHTS LLC
Address: 919 E LOCKWOOD ST
City/ST/Zip: MESA, AZ 85203

Parcel No.:
Name:
Address:
City/ST/Zip:

Parcel No.: APN 10002002D & 10002002E
Name: NGUYEN PHONG DANG & HUY...
Address: 5231 E KANIKSU ST
City/ST/Zip: APACHE JUNCTION, AZ 85119

Parcel No.:
Name:
Address:
City/ST/Zip:

I hereby verify that the name list above was obtained on the 14th day of December, 20 23, at the office of Tax Assessor Parcel Map and is accurate and complete to the best of my knowledge.
(Source of Information)

On this 14th day of December, 2023, before me personally appeared Scott Hopper
(Name of signor)

Signature Scott Hopper Date 12/14/2023

State of ARIZONA
) ss.
County of MARICOPA

My Commission Expires 7/5/2027

(SEAL)

NANCY L. FULKS
Printed Name of Notary

Nancy L. Fulks
Signature of Notary

Notary Public State of Arizona
Maricopa County
Nancy L Fulks
My Commission Expires 7/5/2027
Commission Number 650816

NOTICE OF PUBLIC HEARING BY THE PINAL COUNTY PLANNING AND ZONING COMMISSION AT 9:00 A.M. ON THE **18th** DAY OF **JANUARY 2024**, AT THE PINAL COUNTY ADMINISTRATIVE COMPLEX, IN THE BOARD OF SUPERVISORS HEARING ROOM, 135 N. PINAL STREET, FLORENCE, ARIZONA, TO CONSIDER AN APPLICATION FOR A SPECIAL USE PARMIT IN THE UNINCORPORATED AREA OF PINAL COUNTY, ARIZONA.

SUP-029-23 – PUBLIC HEARING/ACTION: Goldfield Ghost Town & Mine Tours INC, property owner, Scott Hopper, applicant/agent, requesting approval of a Special Use Permit to continue to operate a wireless communication facility, on a 5.00± acre parcel in the CB-2 General Business Zone; tax parcel 100-02-0370 (legal on file); situated in a portion of Section 1, Township 1 North, Range 8 East, Pinal County, Arizona, located northwest of E Apache Trail and E Mammoth Mine Rd. in an unincorporated area of Pinal County.

ALL PERSONS INTERESTED IN THIS MATTER MAY APPEAR AND SPEAK AT THE PUBLIC HEARING AT THE DATE, TIME, AND PLACE DESIGNATED ABOVE.

DOCUMENTS PERTAINING TO THIS CASE CAN BE FOUND ON THE NOTICE OF HEARING PAGE FOR THE P&Z COMMISSION AT:

https://www.pinal.gov/236/Notice-of-Hearings

DATED THIS 8th DAY OF **DECEMBER 2023**, by Pinal County Community Development Dept.

TO QUALIFY FOR FURTHER NOTIFICATION IN THIS LAND USE MATTER YOU MUST FILE WITH THE PLANNING DEPARTMENT A WRITTEN STATEMENT OF SUPPORT OR OPPOSITION TO THE SUBJECT APPLICATION. YOUR STATEMENT **MUST** CONTAIN THE FOLLOWING INFORMATION:

1) Planning Case Number (see above)
2) Your name, address, telephone number and property tax parcel number **(Print or type)**
3) A brief statement of reasons for supporting or opposing the request
4) Whether or not you wish to appear and be heard at the hearing

WRITTEN STATEMENTS MUST BE FILED WITH:
PINAL COUNTY DEVELOPMENT SERVICES
PO BOX 749
FLORENCE, AZ 85132

Contact for this matter: Glenn Bak, Senior Planner
E-mail address: glenn.bak@pinal.gov
Phone # (520) 866-6444

[*Anything below this line is not for publication*.]

PUBLISHED ONCE:
Pinal Central Dispatch
Arizona Republic

THE ARIZONA REPUBLIC

PO Box 194, Phoenix, Arizona 85001-0194

Phone 1-602-444-7315 Fax 1-877-943-0443

This is not an invoice

PNI-Arizona Republic

AFFIDAVIT OF PUBLICATION

PINNACLE CONSULTING
1426 N MARVIN ST # 101
GILBERT, AZ 85233-2566

This is not an invoice

Order # 0005867113 # of Affidavits 1

P.O # SUP-029-23 TMO PH50434

Issues Dated:

12/22/23

STATE OF WISCONSIN
COUNTY OF BROWN } **SS.**

I, being first duly sworn, upon oath deposes and says: That I am the legal clerk of the Arizona Republic, a newspape of general circulation in the counties of Maricopa, Coconino, Pima and Pinal, in the State of Arizona, published weekly at Phoenix, Arizona, and that the copy hereto attached is a true copy of the advertisement published in the said paper in the issue(s) dated indicated.

Sworn to before me this

22 ND day of
DECEMBER 2023

Notary Public

My Commission expires: 9-19-25

NOTICE OF PUBLIC HEARING BY THE PINAL COUNTY PLANNING AND ZONING COMMISSION AT 9:00 A.M. ON THE 18th DAY OF JANUARY 2024, AT THE PINAL COUNTY ADMINISTRATIVE COMPLEX, IN THE BOARD OF SUPERVISORS HEARING ROOM, 135 N. PINAL STREET, FLORENCE, ARIZONA, TO CONSIDER AN APPLICATION FOR A SPECIAL USE PARMIT IN THE UNINCORPORATED AREA OF PINAL COUNTY, ARIZONA.
SUP-029-23 – PUBLIC HEARING/ACTION: Goldfield Ghost Town & Mine Tours INC, property owner, Scott Hopper, applicant/agent, requesting approval of a Special Use Permit to continue to operate a wireless communication facility, on a 5.00± acre parcel in the CB-2 General Business Zone; tax parcel 100-02-0370 (legal on file); situated in a portion of Section 1, Township 1 North, Range 8 East, Pinal County, Arizona, located northwest of E Apache Trail and E Mammoth Mine Rd. in an unincorporated area of Pinal County.
ALL PERSONS INTERESTED IN THIS MATTER MAY APPEAR AND SPEAK AT THE PUBLIC HEARING AT THE DATE, TIME, AND PLACE DESIGNATED ABOVE.
DOCUMENTS PERTAINING TO THIS CASE CAN BE FOUND ON THE NOTICE OF HEARING PAGE FOR THE P&Z COMMISSION AT:
https://www.pinal.gov/236/Notice-of-Hearings
DATED THIS 8th DAY OF DECEMBER 2023, by Pinal County Community Development Dept.
TO QUALIFY FOR FURTHER NOTIFICATION IN THIS LAND USE MATTER YOU MUST FILE WITH THE PLANNING DEPARTMENT A WRITTEN STATEMENT OF SUPPORT OR OPPOSITION TO THE SUBJECT APPLICATION. YOUR STATEMENT MUST CONTAIN THE FOLLOWING INFORMATION:
1) Planning Case Number (see above)
2) Your name, address, telephone number and property tax parcel number (Print or type)
3) A brief statement of reasons for supporting or opposing the request
4) Whether or not you wish to appear and be heard at the hearing
WRITTEN STATEMENTS MUST BE FILED WITH:
PINAL COUNTY DEVELOPMENT SERVICES
PO BOX 749
FLORENCE, AZ 85132
Contact for this matter: Glenn Bak, Senior Planner
E-mail address: glenn.bak@pinal.gov
Phone # (520) 866-6444
Pub: Dec. 22, 2023

VICKY FELTY
Notary Public
State of Wisconsin

CERTIFICATION OF POSTING

I hereby certify that the notice(s) shown below was/were posted on the property described in the notice on _12/25/23.

COMMUNITY DEVELOMENT DEPARTMENT

GLENN BAK

BY: _____ Glenn Bak, Planner__ DATED: _1/17/2024____

[signature] *[print name and title]*

NOTICE OF PUBLIC HEARING BY THE PINAL COUNTY PLANNING AND ZONING COMMISSION AT 9:00 A.M. ON THE **18th** DAY OF **JANUARY 2024**, AT THE PINAL COUNTY ADMINISTRATIVE COMPLEX, IN THE BOARD OF SUPERVISORS HEARING ROOM, 135 N. PINAL STREET, FLORENCE, ARIZONA, TO CONSIDER AN APPLICATION FOR A SPECIAL USE PARMIT IN THE UNINCORPORATED AREA OF PINAL COUNTY, ARIZONA.

SUP-029-23 – PUBLIC HEARING/ACTION: Goldfield Ghost Town & Mine Tours INC, property owner, Scott Hopper, applicant/agent, requesting approval of a Special Use Permit to continue to operate a wireless communication facility, on a 5.00± acre parcel in the CB-2 General Business Zone; tax parcel 100-02-0370 (legal on file); situated in a portion of Section 1, Township 1 North, Range 8 East, Pinal County, Arizona, located northwest of E Apache Trail and E Mammoth Mine Rd. in an unincorporated area of Pinal County.

ALL PERSONS INTERESTED IN THIS MATTER MAY APPEAR AND SPEAK AT THE PUBLIC HEARING AT THE DATE, TIME, AND PLACE DESIGNATED ABOVE.

DOCUMENTS PERTAINING TO THIS CASE CAN BE FOUND ON THE NOTICE OF HEARING PAGE FOR THE P&Z COMMISSION AT:

https://www.pinal.gov/236/Notice-of-Hearings

DATED THIS 8th DAY OF **DECEMBER 2023**, by Pinal County Community Development Dept.

TO QUALIFY FOR FURTHER NOTIFICATION IN THIS LAND USE MATTER YOU MUST FILE WITH THE PLANNING DEPARTMENT A WRITTEN STATEMENT OF SUPPORT OR OPPOSITION TO THE SUBJECT APPLICATION. YOUR STATEMENT **MUST** CONTAIN THE FOLLOWING INFORMATION:

1) Planning Case Number (see above)
2) Your name, address, telephone number and property tax parcel number **(Print or type)**
3) A brief statement of reasons for supporting or opposing the request
4) Whether or not you wish to appear and be heard at the hearing

WRITTEN STATEMENTS MUST BE FILED WITH:
PINAL COUNTY DEVELOPMENT SERVICES
PO BOX 749
FLORENCE, AZ 85132

Contact for this matter: Glenn Bak, Senior Planner
E-mail address: glenn.bak@pinal.gov
Phone # (520) 866-6444

THE ARIZONA REPUBLIC

PO Box 194, Phoenix, Arizona 85001-0194

Phone 1-602-444-7315 Fax 1-877-943-0443

This is not an invoice

PNI-Arizona Republic

AFFIDAVIT OF PUBLICATION

PINNACLE CONSULTING
1426 N MARVIN ST # 101
GILBERT, AZ 85233-2566

This is not an invoice

Order # 0005878974 # of Affidavits 1

P.O #

Issues Dated:

02/08/24, 02/12/24

STATE OF WISCONSIN
COUNTY OF BROWN } **SS.**

I, being first duly sworn, upon oath deposes and says: That I am the legal clerk of the Arizona Republic, a newspape of general circulation in the counties of Maricopa, Coconino, Pima and Pinal, in the State of Arizona, published weekly at Phoenix, Arizona, and that the copy hereto attached is a true copy of the advertisement published in the said paper in the issue(s) dated indicated.

D. Roberts

Sworn to before me this

12 TH day of
FEBRUARY 2024

Kathleen Allen

Notary Public

My Commission expires: 1-7-25

NOTICE OF PUBLIC HEARING BY THE PINAL COUNTY BOARD OF SUPERVISORS AT 9:30 A.M ON THE 6th DAY OF MARCH 2024, AT THE PINAL COUNTY ADMINISTRATIVE COMPLEX, IN THE BOARD OF SUPERVISORS HEARING ROOM, 135 N. PINAL STREET, FLORENCE, ARIZONA, TO CONSIDER AN APPLICATION FOR A SPECIAL USE PARMIT IN THE UNINCORPORATED AREA OF PINAL COUNTY, ARIZONA.

SUP-029-23 – PUBLIC HEARING/ACTION: Goldfield Ghost Town & Mine Tours INC, property owner, Scott Hopper, applicant/agent, requesting approval of a Special Use Permit to continue to operate a wireless communication facility, on a 5.00± acre parcel in the CB-2 General Business Zone; tax parcel 100-02-0370 (legal on file); situated in a portion of Section 1, Township 1 North, Range 8 East, Pinal County, Arizona, located northwest of E Apache Trail and E Mammoth Mine Rd. in an unincorporated area of Pinal County.

ALL PERSONS INTERESTED IN THIS MATTER MAY APPEAR AND SPEAK AT THE PUBLIC HEARING AT THE DATE, TIME, AND PLACE DESIGNATED ABOVE.

DOCUMENTS PERTAINING TO THIS CASE CAN BE FOUND ON THE NOTICE OF HEARING PAGE FOR THE P&Z COMMISSION AT:
https://www.pinal.gov/236/Notice-of-Hearings

DATED THIS 1st DAY OF FEBRUARY 2024, by Pinal County Community Development Dept.

TO QUALIFY FOR FURTHER NOTIFICATION IN THIS LAND USE MATTER YOU MUST FILE WITH THE PLANNING DEPARTMENT A WRITTEN STATEMENT OF SUPPORT OR OPPOSITION TO THE SUBJECT APPLICATION. YOUR STATEMENT MUST CONTAIN THE FOLLOWING INFORMATION:

1) Planning Case Number (see above)
2) Your name, address, telephone number and property tax parcel number (Print or type)
3) A brief statement of reasons for supporting or opposing the request
4) Whether or not you wish to appear and be heard at the hearing

WRITTEN STATEMENTS MUST BE FILED WITH:
PINAL COUNTY DEVELOPMENT SERVICES
PO BOX 749
FLORENCE, AZ 85132
Contact for this matter: Glenn Bak, Senior Planner
E-mail address: glenn.bak@pinal.gov
Phone # (520) 866-6444
Pub: Feb 12, 2024

KATHLEEN ALLEN
Notary Public
State of Wisconsin

When recorded return to:
Clerk
Pinal County Board of Supervisors
P.O. Box 827
Florence, AZ 85132

CONSENT TO SCHEDULE FOR DEVELOPMENT/CONDITIONS/STIPULATIONS AND WAIVER OF CLAIMS FOR DIMINUTION IN VALUE

This Consent to Schedule for Development and Conditions/Stipulations and Waiver of Claims for Diminution in Value ("Consent and Waiver") is made in favor of Pinal County (the "County") by GOLDFIELD GHOST TOWN & MINE TOURS INC ("Owner").

Owner warrants and represents that Owner is the fee title owner of the property described herein, and that no other entity or person has an ownership interest in the property. Prior to Owner's transfer, sale or conveyance of all or any part of its right, title and interest in the Property at any time within thirty (30) days of the County's approval of Owner's application described herein, Owner shall notify the County of said transfer, sale or conveyance and shall require the new Owner to execute and agree to this Consent and Waiver as part of any transfer, sale or conveyance of the property described herein.

Owner acknowledges that A.R.S. § 12-1134 of the Arizona Private Property Rights Protection Act provides in some cases that a county is required to pay just compensation to a landowner if the County approves a land use law that reduces the fair market value of the owner's property. Owner further acknowledges that A.R.S. § 12-1134 authorizes a private property owner to waive any claim for diminution in value of property in connection with any action proposed by a county or any action requested by the property owner.

Owner has submitted an application to Pinal County ("County") requesting the County approve a Special Use Permit to continue to operate a wireless communication facility for development of the following described property ("Property"):

LEGAL DESCRIPTION IS ATTACHED HERETO AS EXHIBIT "A."

By signing below, Owner agrees and consents to all conditions/stipulations/Schedule for Development imposed by Pinal County in conjunction with the approval of the Special Use Permit, Case No. SUP-029-23, which are attached hereto as EXHIBIT B.

By signing below, Owner acknowledges that the approval of the Special Use Permit, Case No. SUP-029-23, might affect existing rights to use, divide, sell or possess the Property.

By signing below, Owner hereby waives any and all rights to claim compensation for diminution in value pursuant to A.R.S. §12-1134 that may now or in the future exist as a result of the approval of the SUP-029-23, Case No. SUP-029-23, and the Schedule for Development and conditions/stipulations imposed in conjunction with the approval. Owner waives any and all rights to claim compensation for diminution in value for any action taken by the County to rescind approval of SUP-029-23 in Case No. SUP-029-23 because of non-compliance with the Schedule for Development and/or any of the approved conditions/stipulations.

This Consent and Waiver shall run with the land and shall be binding upon all present and subsequent property owners.

Owner consents to the recordation of this Consent and Waiver after approval of the above-referenced case by the County. If Owner withdraws its application prior to final action of the County or the County denies the application, Owner is released from this Consent and Waiver.

OWNER: GOLDFIELD GHOST TOWN & MINE TOURS INC
[Print Entity Name]

Signature

Its: President
[Title, if applicable]

Dated: 12-18-2023

INDIVIDUAL ACKNOWLEDGMENT: ***[To be filled out if NOT a corporation, partnership, or trust]***

STATE OF _____)
) ss.
COUNTY OF _____)

The foregoing instrument was acknowledged before me this ____ day of _____, _____, by _____.
[Insert Name of Signor(s)]

_____
Notary Public

My commission expires: _____

CORPORATION, OFFICER, PARTNER OR TRUSTEE ACKNOWLEDGMENT: ***[To be filled out if a corporation, partnership, or trust]***

STATE OF ARIZONA)
) ss.
COUNTY OF MARICOPA)

The foregoing instrument was acknowledged before me, this 18th day of December, 2023, by Robert Schoose as
[Insert Name of Officer]
President of GOLDFIELD GHOST TOWN & MINE TOURS INC
[Insert Title] ***[Insert Name of Company]***
an Arizona corporation, who being authorized to do so, executed the
[Insert State of Incorporation]
foregoing instrument on behalf of said entity for the purposes stated therein.

Nancy L. Fulks
Notary Public

My commission expires: July 5, 2027

Notary Public State of Arizona
Maricopa County
Nancy L Fulks
My Commission Expires 7/5/2027
Commission Number 650816

ACKNOWLEDGMENT: [***Use only when a second company is signing on behalf of owner***:]

STATE OF _____)
) ss.
COUNTY OF _____)

The foregoing instrument was acknowledged before me, this ____ day of _____, 20_____, by _____ as
[Insert Signor's Name] ***[Insert Title]***
of _____, an _____ corporation,
[Insert Name of Second Company] ***[Insert State of Incorporation]***
as _____ *for* _____
[i.e. member, manager, etc.] ***[Owner's Name]***
who being authorized to do so, executed the foregoing instrument on behalf of said entities for the purposes stated therein.

_____
Notary Public

My commission expires: _____

EXHIBIT B

SUP-029-23 STIPULATIONS

1. All Federal (FCC), State and County regulations shall adhere to and all required approvals, plans, submittal documents, and permits submitted and obtained; including, but not limited to, planning clearance, building, sewage disposal, right-of-way use permit, handling and disposal of waste water, air quality permit, security lighting, fire protection, landscaping, signage, etc.;

2. Submit an R.F. Engineer's certification within thirty days of BOS approval, that the facilities comply with all Federal Aviation Administration (FAA), and that the radiation meets Federal Communication Commission (FCC) requirements. Should interference be determined to exist with the WAPA Communications equipment, building permits shall not be issued until the interference issues are resolved to the satisfaction of Pinal County Community Development;

3. The applicant/property owner shall meet the requirements of the International Fire Code, as adopted by Pinal County and administered by the Pinal County Building Safety Department;

4. A dust registration permit from the Pinal County Air Quality Control District shall be obtained prior to the disturbance of 0.1 acres or more land;

5. All construction activity must conform to the Earthmoving Activity requirements of the Pinal County Air Quality Control District;

6. The above proposed Site Plan should have a paved road access to the project, paved road access with the project and paved parking stall/s, unless not required by Traffic/Public Works Engineer;

7. An Air Quality industrial permit may be required if there is an emergency generator installed with a capacity of 325HP or more and runs 72 hours or more;

8. Access road to the WCF shall be 24' wide per code requirements;

9. One ADA parking space for the facility must be provided on site;

10. With the exception of changes necessary to meet applicable stipulations, the layout, design and set up of the wireless communication facility shall be as shown and set forth on the applicant's site plan as submitted on 08-21-2023;

11. Any new change or new expansion of use shall require approval by the Board of Supervisors under the procedures pursuant to PCDSC 2.150.010 (O);

12. At such time as technology becomes antiquated, the wireless communication facility shall be removed from the subject property at owners expense;

13. The applicant shall keep the property free of trash, litter and debris;

14. Violation of these conditions at any time may invoke revocation proceedings by the Pinal County Community Development Department; and

15. Special use permit is tied to the parcel number 100-02-0370.

EXHIBIT A

LEGAL DESCRIPTION

SUP-029-23

LEGAL DESCRIPTION FOR APN: 100-02-0370

TRACT NO. 1:
THE WEST HALF OF THE SOUTHWEST QUARTER OF THE NORTHEAST QUARTER OF THE NORTHWEST QUARTER OF THE SOUTHWEST QUARTER OF SECTION 1, TOWNSHIP 1 NORTH, RANGE 8 EAST OF THE GILA AND SALT RIVER BASE AND MERIDIAN, PINAL COUNTY, ARIZONA.

EXCEPT ALL COAL, OIL, GAS AND OTHER MINERALS AS RESERVED IN PATENT FROM UNITED STATES OF AMERICA.

TRACT NO. 2:
THE EAST HALF OF THE NORTHEAST QUARTER OF THE SOUTHWEST QUARTER OF THE NORTHWEST QUARTER OF THE SOUTHWEST QUARTER OF SECTION 1, TOWNSHIP 1 NORTH, RANGE 8 EAST, OF THE GILA AND SALT RIVER BASE AND MERIDIAN, PINAL COUNTY, ARIZONA.

EXCEPT ALL COAL, OIL, GAS AND OTHER MINERALS AS RESERVED IN PATENT FROM UNITED STATES OF AMERICA.

TRACT NO. 3:
THE EAST HALF OF THE SOUTHEAST QUARTER OF THE NORTHWEST QUARTER OF THE NORTHWEST QUARTER OF THE SOUTHWEST QUARTER OF SECTION 1, TOWNSHIP 1 NORTH, RANGE 8 EAST, OF THE GILA AND SALT RIVER BASE AND MERIDIAN, PINAL COUNTY, ARIZONA.

EXCEPT ALL COAL, OIL, GAS AND OTHER MINERALS AS RESERVED IN PATENT FROM UNITED STATES OF AMERICA.

TRACT NO. 4:
THE WEST HALF OF THE NORTHWEST QUARTER OF THE SOUTHEAST QUARTER OF THE NORTHWEST QUARTER OF THE SOUTHWEST QUARTER OF SECTION 1, TOWNSHIP 1 NORTH, RANGE 8 EAST, OF THE GILA AND SALT RIVER BASE AND MERIDIAN, PINAL COUNTY, ARIZONA.

EXCEPT ALL COAL, OIL, GAS AND OTHER MINERALS AS RESERVED IN PATENT FROM UNITED STATES OF AMERICA.

LESS AND EXCEPT THAT PORTION OF PROPERTY CONVEYED TO BOUSH MINING COMPANY, INC. FROM GOLDFIELD GHOST TOWN & MINE TOURS, INC. BY WARRANTY DEED DATED JANUARY 26, 1999 AND RECORDED JANUARY 27, 1999 IN INSTRUMENT NO. 1999-003672. AND BEING A PORTION OF THE SAME PROPERTY CONVEYED TO GOLDFIELD, GHOST TOWN AND MINE TOURS, INC., AN ARIZONA CORPORATION FROM J. H. MCEACHERN AND MAMIE E. MCEACHERN, HIS WIFE BY WARRANTY DEED DATED JULY 8, 1985 AND RECORDED JULY 9, 1985 IN DEED BOOK 1297, PAGE 193.

TAX PARCEL NO. 100-02-0370

TERRAMARK LAND SURVEYING
24654 N. LAKE PLEASANT PKWY #103-163
PEORIA, AZ 85383
P. 480-440-1748
F. 623-777-1782
www.terramarksurveying.com

PROJ. NO.:	1403147
PROJ. NAME.:	PH50434A
PAGE:	1 OF 2
DATE:	02/19/24

EXHIBIT FOR APN: 100-02-0370

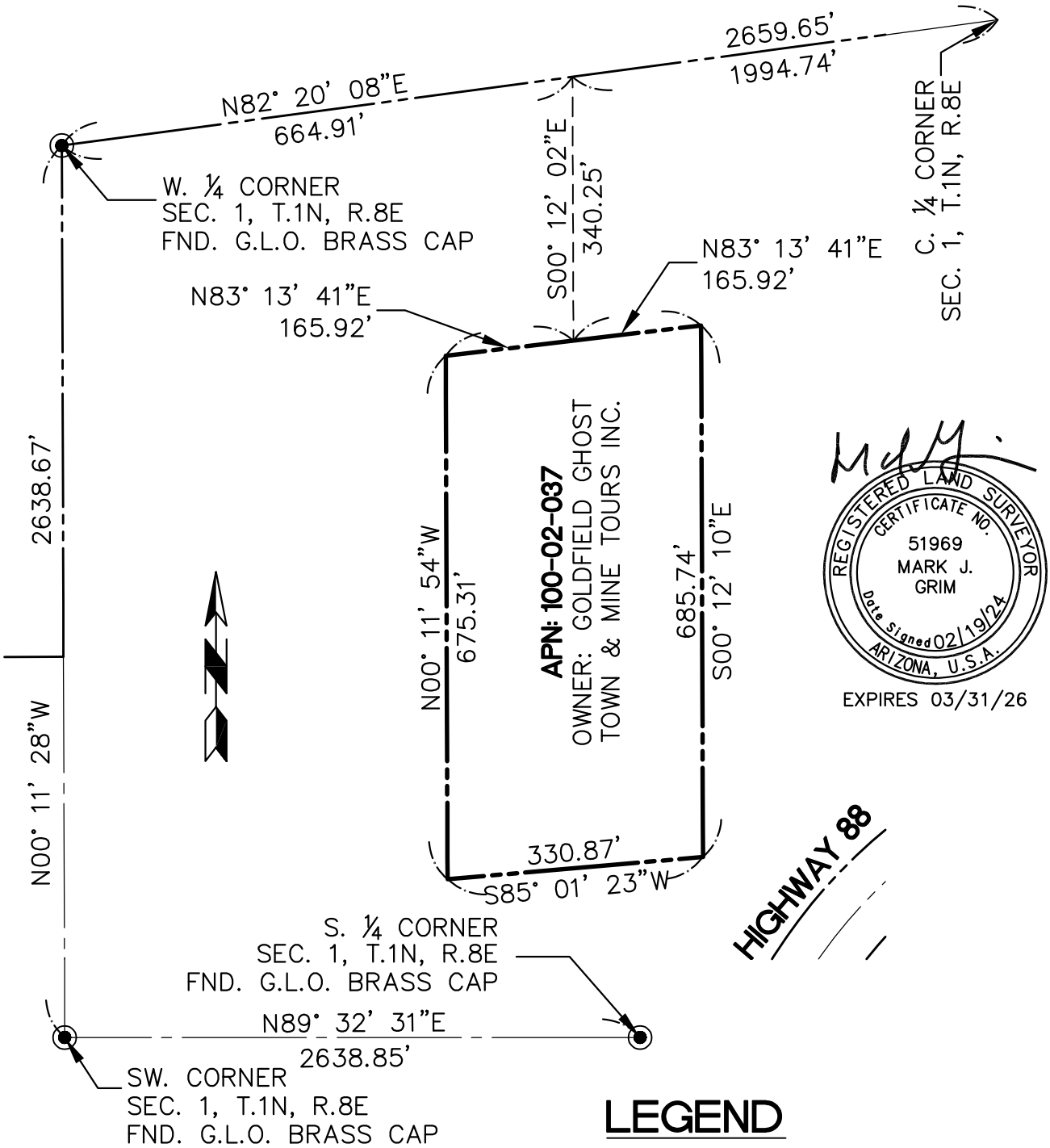

REGISTERED LAND SURVEYOR
CERTIFICATE NO.
51969
MARK J.
GRIM
Date Signed 02/19/24
ARIZONA, U.S.A.
EXPIRES 03/31/26

DETAIL
1" = 200'

LEGEND

- FOUND G.L.O. BRASS CAP
- BOUNDARY LINE
- ADJOINING BOUNDARY LINE
- SECTION LINE

TERRAMARK
LAND SURVEYING
24654 N. LAKE PLEASANT PKWY #103-163
PEORIA, AZ 85383
P. 480-440-1748
F. 623-777-1782
www.terramarksurveying.com

PROJ. NO.:	1403147
PROJ. NAME.:	PH50434A
PAGE:	2 OF 2
DATE:	02/19/24

When recorded return to:
Clerk of the Board
P.O. Box 827
Florence AZ 85132

RESOLUTION NO. 2024-SUP-029-23

A RESOLUTION OF THE PINAL COUNTY, ARIZONA, BOARD OF SUPERVISORS APPROVING A SPECIAL USE PERMIT FOR A PROPERTY LOCATED NORTHWEST OF EAST APACHE TRAIL AND EAST MAMMOTH MINE ROAD (TAX PARCEL (100-02-0370) TO CONTINUE TO OPERATE A WIRELESS COMMUNICATION FACILITY, WITH ANTENNA MODIFICATIONS AND ENHANCED STEALTH IN CONNECTION WITH PINAL COUNTY COMMUNITY DEVELOPMENT DEPARTMENT CASE NO. SUP-029-23

WHEREAS, the Pinal County Board of Supervisors (the "**Board**") is authorized pursuant to the Pinal County Development Services Code § 2.151.010 to approve Special Use Permits in order to ensure and protect the public health, safety, convenience and general welfare; and,

WHEREAS, on August 21, 2023, the Pinal County Community Development Department (the "**Department**") received an application from Scott Hopper of Pinnacle Consulting, applicant, on behalf of Goldfield Ghost Town & Mine Tours INC, owner of a 5.00± acre parcel located northwest of E Apache Trail and E Mammoth Mine Rd. in an unincorporated area of Pinal County (Tax Parcel 100-02-0370) zoned General Business (CB-2) and legally described on the attached **Exhibit "A"** (the "**Property**") for a Special Use Permit requesting approval to continue to operate a wireless communication facility with antenna modifications and enhanced stealth on the Property (the "**SUP Application**"); and,

WHEREAS, on January 18, 2023, the Pinal County Planning and Zoning Commission (the "**Commission**") held a public hearing on the SUP Application under Case No. SUP-029-23 (the "**Commission Hearing**"); and,

WHEREAS, during the Commission Hearing Department staff presented and recommended approval of the SUP Application with 15 stipulations, as set forth on the attached **Exhibit "B"** (the "**Stipulations**"); and,

WHEREAS, at the conclusion of the Commission Hearing, the Commission voted 8-0 in favor of forwarding a recommendation of approval of the SUP Application to the Board, subject to the Stipulations.

NOW, THEREFORE, BE IT RESOLVED by the Board that the SUP Application is hereby approved subject to the Stipulations.

///

[Signatures on following page.]

RESOLUTION NO. 2024-SUP-029-23

PASSED AND ADOPTED this 6th day of March, 2024, by the PINAL COUNTY BOARD OF SUPERVISORS.

_____
Chairman of the Board

ATTEST:

_____
Clerk/Deputy Clerk of the Board

APPROVED AS TO FORM:

_____
Deputy County Attorney

EXHIBIT A

LEGAL DESCRIPTION

SUP-029-23

LEGAL DESCRIPTION FOR APN: 100-02-0370

TRACT NO. 1:
THE WEST HALF OF THE SOUTHWEST QUARTER OF THE NORTHEAST QUARTER OF THE NORTHWEST QUARTER OF THE SOUTHWEST QUARTER OF SECTION 1, TOWNSHIP 1 NORTH, RANGE 8 EAST OF THE GILA AND SALT RIVER BASE AND MERIDIAN, PINAL COUNTY, ARIZONA.

EXCEPT ALL COAL, OIL, GAS AND OTHER MINERALS AS RESERVED IN PATENT FROM UNITED STATES OF AMERICA.

TRACT NO. 2:
THE EAST HALF OF THE NORTHEAST QUARTER OF THE SOUTHWEST QUARTER OF THE NORTHWEST QUARTER OF THE SOUTHWEST QUARTER OF SECTION 1, TOWNSHIP 1 NORTH, RANGE 8 EAST, OF THE GILA AND SALT RIVER BASE AND MERIDIAN, PINAL COUNTY, ARIZONA.

EXCEPT ALL COAL, OIL, GAS AND OTHER MINERALS AS RESERVED IN PATENT FROM UNITED STATES OF AMERICA.

TRACT NO. 3:
THE EAST HALF OF THE SOUTHEAST QUARTER OF THE NORTHWEST QUARTER OF THE NORTHWEST QUARTER OF THE SOUTHWEST QUARTER OF SECTION 1, TOWNSHIP 1 NORTH, RANGE 8 EAST, OF THE GILA AND SALT RIVER BASE AND MERIDIAN, PINAL COUNTY, ARIZONA.

EXCEPT ALL COAL, OIL, GAS AND OTHER MINERALS AS RESERVED IN PATENT FROM UNITED STATES OF AMERICA.

TRACT NO. 4:
THE WEST HALF OF THE NORTHWEST QUARTER OF THE SOUTHEAST QUARTER OF THE NORTHWEST QUARTER OF THE SOUTHWEST QUARTER OF SECTION 1, TOWNSHIP 1 NORTH, RANGE 8 EAST, OF THE GILA AND SALT RIVER BASE AND MERIDIAN, PINAL COUNTY, ARIZONA.

EXCEPT ALL COAL, OIL, GAS AND OTHER MINERALS AS RESERVED IN PATENT FROM UNITED STATES OF AMERICA.

LESS AND EXCEPT THAT PORTION OF PROPERTY CONVEYED TO BOUSH MINING COMPANY, INC. FROM GOLDFIELD GHOST TOWN & MINE TOURS, INC. BY WARRANTY DEED DATED JANUARY 26, 1999 AND RECORDED JANUARY 27, 1999 IN INSTRUMENT NO. 1999-003672. AND BEING A PORTION OF THE SAME PROPERTY CONVEYED TO GOLDFIELD, GHOST TOWN AND MINE TOURS, INC., AN ARIZONA CORPORATION FROM J. H. MCEACHERN AND MAMIE E. MCEACHERN, HIS WIFE BY WARRANTY DEED DATED JULY 8, 1985 AND RECORDED JULY 9, 1985 IN DEED BOOK 1297, PAGE 193.

TAX PARCEL NO. 100-02-0370

TERRAMARK LAND SURVEYING
24654 N. LAKE PLEASANT PKWY #103-163
PEORIA, AZ 85383
P. 480-440-1748
F. 623-777-1782
www.terramarksurveying.com

PROJ. NO.:	1403147
PROJ. NAME.:	PH50434A
PAGE:	1 OF 2
DATE:	02/19/24

EXHIBIT FOR APN: 100-02-0370

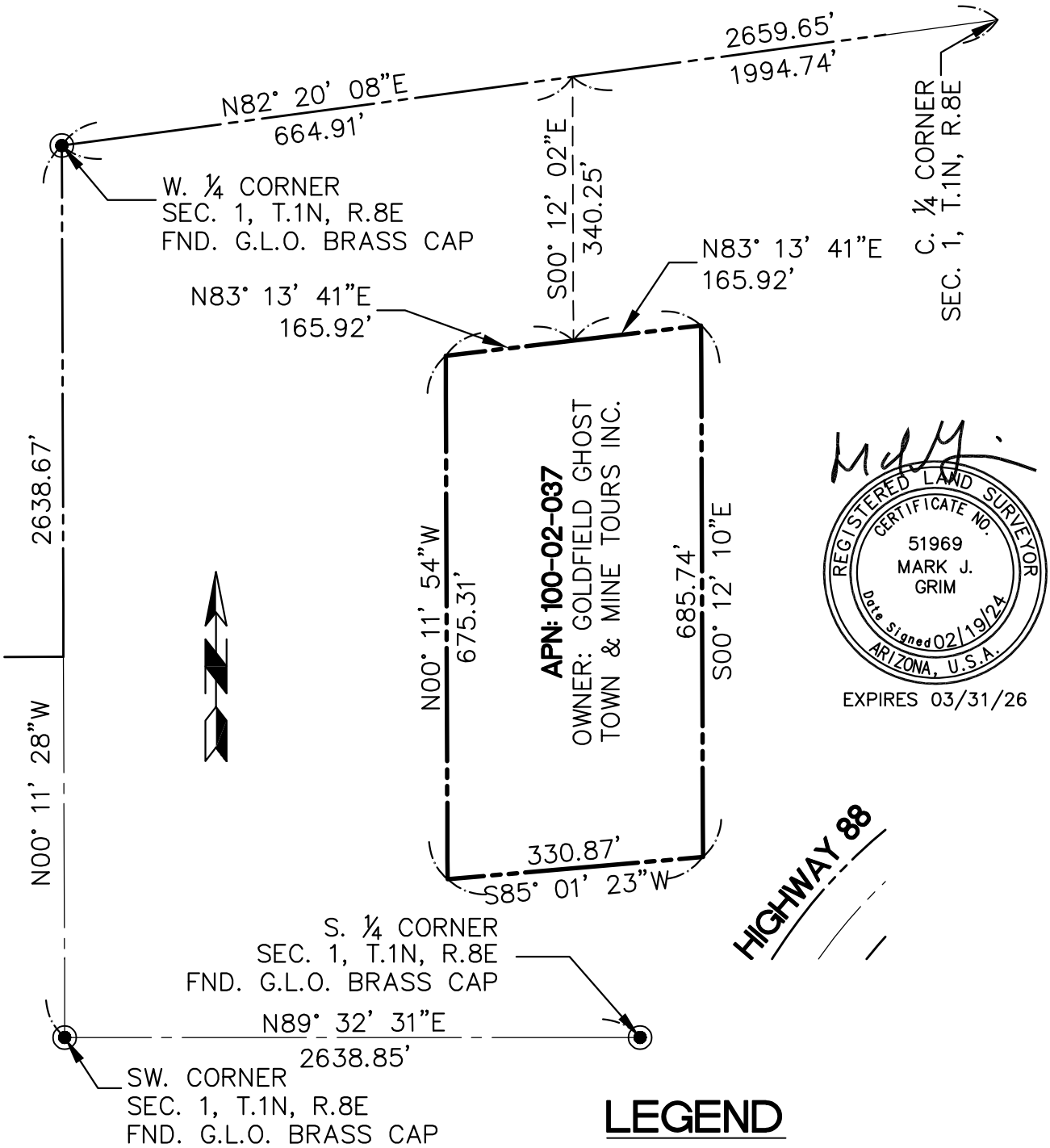

REGISTERED LAND SURVEYOR
CERTIFICATE NO.
51969
MARK J.
GRIM
Date Signed 02/19/24
ARIZONA, U.S.A.
EXPIRES 03/31/26

DETAIL
1" = 200'

LEGEND

- FOUND G.L.O. BRASS CAP
- BOUNDARY LINE
- ADJOINING BOUNDARY LINE
- SECTION LINE

TERRAMARK
LAND SURVEYING
24654 N. LAKE PLEASANT PKWY #103-163
PEORIA, AZ 85383
P. 480-440-1748
F. 623-777-1782
www.terramarksurveying.com

PROJ. NO.:	1403147
PROJ. NAME.:	PH50434A
PAGE:	2 OF 2
DATE:	02/19/24

EXHIBIT B

SUP-029-23 STIPULATIONS

1. All Federal (FCC), State and County regulations shall adhere to and all required approvals, plans, submittal documents, and permits submitted and obtained; including, but not limited to, planning clearance, building, sewage disposal, right-of-way use permit, handling and disposal of waste water, air quality permit, security lighting, fire protection, landscaping, signage, etc.;

2. Submit an R.F. Engineer's certification within thirty days of BOS approval, that the facilities comply with all Federal Aviation Administration (FAA), and that the radiation meets Federal Communication Commission (FCC) requirements. Should interference be determined to exist with the WAPA Communications equipment, building permits shall not be issued until the interference issues are resolved to the satisfaction of Pinal County Community Development;

3. The applicant/property owner shall meet the requirements of the International Fire Code, as adopted by Pinal County and administered by the Pinal County Building Safety Department;

4. A dust registration permit from the Pinal County Air Quality Control District shall be obtained prior to the disturbance of 0.1 acres or more land;

5. All construction activity must conform to the Earthmoving Activity requirements of the Pinal County Air Quality Control District;

6. The above proposed Site Plan should have a paved road access to the project, paved road access with the project and paved parking stall/s, unless not required by Traffic/Public Works Engineer;

7. An Air Quality industrial permit may be required if there is an emergency generator installed with a capacity of 325HP or more and runs 72 hours or more;

8. Access road to the WCF shall be 24' wide per code requirements;

9. One ADA parking space for the facility must be provided on site;

10. With the exception of changes necessary to meet applicable stipulations, the layout, design and set up of the wireless communication facility shall be as shown and set forth on the applicant's site plan as submitted on 08-21-2023;

11. Any new change or new expansion of use shall require approval by the Board of Supervisors under the procedures pursuant to PCDSC 2.150.010 (O);

12. At such time as technology becomes antiquated, the wireless communication facility shall be removed from the subject property at owners expense;

13. The applicant shall keep the property free of trash, litter and debris;

14. Violation of these conditions at any time may invoke revocation proceedings by the Pinal County Community Development Department; and

15. Special use permit is tied to the parcel number 100-02-0370.

PINAL COUNTY
WIDE OPEN OPPORTUNITY

AGENDA ITEM

March 6, 2024 ADMINISTRATION BUILDING A
FLORENCE, ARIZONA

REQUESTED BY:

Funds #:

Dept. #:

Dept. Name:

Director:

BRIEF DESCRIPTION OF AGENDA ITEM AND REQUESTED BOARD ACTION:

Discussion/approval/disapproval of the funding for the recommended 3% Pinal County Health Benefits increase in FY 2024 - 2025 to promote a consistent county contribution among all plans within legal and system limits. (Angeline Woods/MaryEllen Sheppard)

BRIEF DESCRIPTION OF THE FISCAL CONSIDERATIONS AND/OR EXPECTED FISCAL IMPACT OF THIS AGENDA ITEM:

BRIEF DESCRIPTION OF THE EXPECTED PERFORMANCE IMPACT OF THIS AGENDA ITEM:

MOTION:

Approve as presented

History

Time	Who	Approval
2/26/2024 8:19 AM	County Attorney	Yes
2/28/2024 11:06 AM	Budget Office	Yes
2/28/2024 11:26 AM	County Manager	Yes
2/29/2024 8:37 AM	Clerk of the Board	Yes

ATTACHMENTS:

Click to download

No Attachments Available

PINAL COUNTY

WIDE OPEN OPPORTUNITY

AGENDA ITEM

March 6, 2024 ADMINISTRATION BUILDING A
FLORENCE, ARIZONA

REQUESTED BY:

Funds #:

Dept. #:

Dept. Name:

Director:

BRIEF DESCRIPTION OF AGENDA ITEM AND REQUESTED BOARD ACTION:

Discussion of Board Members' request for future agenda item(s) and/or reports to be presented at upcoming meetings. (Mike Goodman)

BRIEF DESCRIPTION OF THE FISCAL CONSIDERATIONS AND/OR EXPECTED FISCAL IMPACT OF THIS AGENDA ITEM:

BRIEF DESCRIPTION OF THE EXPECTED PERFORMANCE IMPACT OF THIS AGENDA ITEM:

MOTION:

History

Time	Who	Approval

ATTACHMENTS:

Click to download
No Attachments Available

PINAL COUNTY
WIDE OPEN OPPORTUNITY

AGENDA ITEM

March 6, 2024 ADMINISTRATION BUILDING A
FLORENCE, ARIZONA

REQUESTED BY:

Funds #:

Dept. #:

Dept. Name:

Director:

BRIEF DESCRIPTION OF AGENDA ITEM AND REQUESTED BOARD ACTION:

Executive Session pursuant to A.R.S. 38-431.03(A)(3)(4) for counsel to provide legal advice and to obtain direction regarding pending or contemplated litigation relating to a tax deed issued on properties. (Kevin Costello/Kent Volkmer)

BRIEF DESCRIPTION OF THE FISCAL CONSIDERATIONS AND/OR EXPECTED FISCAL IMPACT OF THIS AGENDA ITEM:

BRIEF DESCRIPTION OF THE EXPECTED PERFORMANCE IMPACT OF THIS AGENDA ITEM:

MOTION:

History

Time	Who	Approval
2/22/2024 4:40 PM	Clerk of the Board	Yes

ATTACHMENTS:

Click to download

No Attachments Available

PINAL COUNTY
WIDE OPEN OPPORTUNITY

AGENDA ITEM

March 6, 2024 ADMINISTRATION BUILDING A
FLORENCE, ARIZONA

REQUESTED BY:

Funds #:

Dept. #:

Dept. Name:

Director:

BRIEF DESCRIPTION OF AGENDA ITEM AND REQUESTED BOARD ACTION:

Executive Session pursuant to A.R.S. 38-431.03(A)(3)(4) for legal advice and litigation update concerning TX 2017-000663. (Chris Keller/Kent Volkmer)

BRIEF DESCRIPTION OF THE FISCAL CONSIDERATIONS AND/OR EXPECTED FISCAL IMPACT OF THIS AGENDA ITEM:

BRIEF DESCRIPTION OF THE EXPECTED PERFORMANCE IMPACT OF THIS AGENDA ITEM:

MOTION:

History

Time	Who	Approval

ATTACHMENTS:

Click to download
No Attachments Available

PINAL COUNTY

WIDE OPEN OPPORTUNITY

AGENDA ITEM

March 6, 2024 ADMINISTRATION BUILDING A
FLORENCE, ARIZONA

REQUESTED BY:

Funds #:

Dept. #:

Dept. Name: Clerk of the Board

Director: Natasha Kennedy

BRIEF DESCRIPTION OF AGENDA ITEM AND REQUESTED BOARD ACTION:

Pursuant to A.R.S. 38-431.02, NOTICE IS HEREBY GIVEN, that the public will have physical access to the meeting room at 9:15 AM.

BRIEF DESCRIPTION OF THE FISCAL CONSIDERATIONS AND/OR EXPECTED FISCAL IMPACT OF THIS AGENDA ITEM:

BRIEF DESCRIPTION OF THE EXPECTED PERFORMANCE IMPACT OF THIS AGENDA ITEM:

MOTION:

History

Time	Who	Approval

ATTACHMENTS:

Click to download
No Attachments Available

PINAL COUNTY

WIDE OPEN OPPORTUNITY

AGENDA ITEM

March 6, 2024 ADMINISTRATION BUILDING A
FLORENCE, ARIZONA

REQUESTED BY:

Funds #:

Dept. #:

Dept. Name:

Director:

BRIEF DESCRIPTION OF AGENDA ITEM AND REQUESTED BOARD ACTION:

Notice of Possible Recess: The Board may take a Recess around 12:30 p.m. and the meeting will reconvene around 1:00 p.m.

BRIEF DESCRIPTION OF THE FISCAL CONSIDERATIONS AND/OR EXPECTED FISCAL IMPACT OF THIS AGENDA ITEM:

BRIEF DESCRIPTION OF THE EXPECTED PERFORMANCE IMPACT OF THIS AGENDA ITEM:

MOTION:

History

Time	Who	Approval

ATTACHMENTS:

Click to download
No Attachments Available

PINAL COUNTY

WIDE OPEN OPPORTUNITY

AGENDA ITEM

March 6, 2024 ADMINISTRATION BUILDING A
FLORENCE, ARIZONA

REQUESTED BY:

Funds #:

Dept. #:

Dept. Name:

Director:

BRIEF DESCRIPTION OF AGENDA ITEM AND REQUESTED BOARD ACTION:

Any invocation that may be offered before the official start of the meeting (i.e. Item 1) that is offered by a Chaplain serving the county or any member of a religious organization with a physical presence in the county so as to qualify for an exemption for religious property under A.R.S. 42-11109, is expressing private thoughts as governed by his or her own conscience, to and for the benefit of the Board. The view or beliefs expressed by the invocation speaker have not been previously reviewed or approved by the Board and do not necessarily represent the religious beliefs or views of the Board in part or as a whole. No member of the community is required to attend or participate in the invocation and such decision will have no impact on their right to participate actively in the business of the Board.

BRIEF DESCRIPTION OF THE FISCAL CONSIDERATIONS AND/OR EXPECTED FISCAL IMPACT OF THIS AGENDA ITEM:

BRIEF DESCRIPTION OF THE EXPECTED PERFORMANCE IMPACT OF THIS AGENDA ITEM:

MOTION:

History

Time	Who	Approval

ATTACHMENTS:

Click to download
No Attachments Available

PINAL COUNTY
WIDE OPEN OPPORTUNITY

AGENDA ITEM

March 6, 2024 ADMINISTRATION BUILDING A
FLORENCE, ARIZONA

REQUESTED BY:

Funds #:

Dept. #:

Dept. Name: Clerk of the Board

Director: Natasha Kennedy

BRIEF DESCRIPTION OF AGENDA ITEM AND REQUESTED BOARD ACTION:

Meeting Notice of Posting

BRIEF DESCRIPTION OF THE FISCAL CONSIDERATIONS AND/OR EXPECTED FISCAL IMPACT OF THIS AGENDA ITEM:

BRIEF DESCRIPTION OF THE EXPECTED PERFORMANCE IMPACT OF THIS AGENDA ITEM:

MOTION:

History

Time	Who	Approval

ATTACHMENTS:

Click to download
Notice of Posting
Amended Notice of Posting

PINAL COUNTY

WIDE OPEN OPPORTUNITY

MEETING NOTICE OF POSTING

STATE OF ARIZONA

COUNTY OF PINAL

I, Natasha Kennedy, being duly sworn upon her oath, says as follows:

I am the appointed Clerk of the Pinal County Board of Supervisors.

In my position as Clerk of the Board of Supervisors and Board of Directors, I am responsible for posting all Agendas.

Pursuant to A.R.S. 38-431.02 notice is hereby given that the Pinal County Board of Supervisors and Pinal County Board of Directors will hold a Regular meeting on **Wednesday, March 6, 2024 at 9:30 AM** in the Board Hearing Room, 1891 Historic Courthouse, Administrative Complex, located at 135 N. Pinal Street, Florence, Arizona 85132. The public will have physical access to the meeting room at 9:15 AM.

Notice of Possible Recess: The Board may take a Recess around 12:30 PM and the meeting will reconvene around 1:00 PM.

Board Meetings are broadcasted live and the public may access the meeting on the County Website at Pinal.gov under "Meeting Videos."

Board Agendas are available on the County Website at Pinal.gov under "Agendas & Minutes."

At any time during business hours, citizens may reach the Clerk of the Board Office at (520) 866-6068 or via email at **ClerkoftheBoard@pinal.gov** for information about Board meeting participation.

Note: One or more members of the Board may participate in this meeting by telephonic conference call.

I hereby further certify that I caused to be posted this Friday, March 1, 2024, around 11:00 AM the Regular Agenda, Library District Agenda, Public Health Services District Agenda, and Executive Session as follows:

1. A kiosk located outside the front entrance to The Old Historical Courthouse, Administrative Complex Building, 135 North Pinal Street, Florence, Arizona 85132
2. County Website under Agendas & Meetings located at Pinal.gov
3. Emailed the NOVUS Agenda Distribution List and Clerk of the Board Notification Distribution List

IN WITNESS WHEREOF, I have hereunto set my hand and caused to be affixed the Official Pinal County, Arizona Seal this 1st day of March, 2024.

THE SEAL OF PINAL COUNTY ARIZONA 1875

Natasha Kennedy
Clerk of the Board of Supervisors
Pinal County, Arizona

PINAL COUNTY

WIDE OPEN OPPORTUNITY

AMENDED MEETING NOTICE OF POSTING

STATE OF ARIZONA

COUNTY OF PINAL

I, Natasha Kennedy, being duly sworn upon her oath, says as follows:

I am the appointed Clerk of the Pinal County Board of Supervisors.

In my position as Clerk of the Board of Supervisors and Board of Directors, I am responsible for posting all Agendas.

Pursuant to A.R.S. 38-431.02 notice is hereby given that the Pinal County Board of Supervisors and Pinal County Board of Directors will hold a Regular meeting on **Wednesday, March 6, 2024 at 9:30 AM** in the Board Hearing Room, 1891 Historic Courthouse, Administrative Complex, located at 135 N. Pinal Street, Florence, Arizona 85132. The public will have physical access to the meeting room at 9:15 AM.

Notice of Possible Recess: The Board may take a Recess around 12:30 PM and the meeting will reconvene around 1:00 PM.

Board Meetings are broadcasted live and the public may access the meeting on the County Website at Pinal.gov under "Meeting Videos."

Board Agendas are available on the County Website at Pinal.gov under "Agendas & Minutes."

At any time during business hours, citizens may reach the Clerk of the Board Office at (520) 866-6068 or via email at **ClerkoftheBoard@pinal.gov** for information about Board meeting participation.

Note: One or more members of the Board may participate in this meeting by telephonic conference call.

I hereby further certify that I caused to be posted this Monday, March 4, 2024, around 2:00 PM the **Amended** Regular Agenda, Library District Agenda, Public Health Services District Agenda, and Executive Session as follows:

1. A kiosk located outside the front entrance to The Old Historical Courthouse, Administrative Complex Building, 135 North Pinal Street, Florence, Arizona 85132
2. County Website under Agendas & Meetings located at Pinal.gov
3. Emailed the NOVUS Agenda Distribution List and Clerk of the Board Notification Distribution List

IN WITNESS WHEREOF, I have hereunto set my hand and caused to be affixed the Official Pinal County, Arizona Seal this 4th day of March, 2024.

THE SEAL OF PINAL COUNTY ARIZONA 1875

Natasha Kennedy
Clerk of the Board of Supervisors
Pinal County, Arizona

PINAL COUNTY
WIDE OPEN OPPORTUNITY

AGENDA ITEM

March 6, 2024 ADMINISTRATION BUILDING A
FLORENCE, ARIZONA

REQUESTED BY:

Funds #:

Dept. #:

Dept. Name:

Director:

BRIEF DESCRIPTION OF AGENDA ITEM AND REQUESTED BOARD ACTION:

Click Here for the General Board Meeting Rules of Order

BRIEF DESCRIPTION OF THE FISCAL CONSIDERATIONS AND/OR EXPECTED FISCAL IMPACT OF THIS AGENDA ITEM:

BRIEF DESCRIPTION OF THE EXPECTED PERFORMANCE IMPACT OF THIS AGENDA ITEM:

MOTION:

History

Time	Who	Approval

ATTACHMENTS:

Click to download
No Attachments Available